File No. 120938

Committee Item No. 4
Board Item No. _____

COMMITTEE/BOARD OF SUPERVISORS

AGENDA PACKET CONTENTS LIST

Committee: Budget and Finance Committee **Date** 10/03/2012

Board of Supervisors Meeting **Date** _____

Cmte	Board	
☐	☐	Motion
☒	☐	Resolution
☐	☐	Ordinance
☐	☐	Legislative Digest
☐	☐	Budget and Legislative Analyst Report
☐	☐	Legislative Analyst Report
☐	☐	Youth Commission Report
☐	☐	Introduction Form (for hearings)
☒	☐	Department/Agency Cover Letter and/or Report
☐	☐	MOU
☐	☐	Grant Information Form
☐	☐	Grant Budget
☐	☐	Subcontract Budget
☒	☐	Contract/Agreement
☐	☐	Form 126 – Ethics Commission
☐	☐	Award Letter
☐	☐	Application
☐	☐	Public Correspondence

OTHER **(Use back side if additional space is needed)**

☐	☐	
☐	☐	
☐	☐	
☐	☐	
☐	☐	
☐	☐	
☐	☐	
☐	☐	

Completed by: Victor Young **Date** September 28, 2012
Completed by: Victor Young **Date** _____

[Agreement with Pacific Gas and Electric Company to Connect a Solar Power Project]

Resolution pursuant to San Francisco Charter Section 9.118(b) authorizing the San Francisco Public Utilities Commission General Manager to enter into a long term interconnection agreement with Pacific Gas and Electric Company for a solar power project at the Alvarado Elementary School.

WHEREAS, The San Francisco Public Utilities Commission (SFPUC) is responsible for implementing renewable energy generating facilities for the City and County of San Francisco (City); and,

WHEREAS, In Resolution No. 124-12, the Board of Supervisors approved a Master License Agreement between the SFPUC and the San Francisco Unified School District (SFUSD) authorizing the SFPUC to install and maintain solar power projects on certain SFUSD buildings that the SFPUC and SFUSD mutually agree are suitable for such use; and

WHEREAS, The SFPUC and SFUSD have agreed that the first solar power project under the Master License Agreement would be developed and installed at the Alvarado Elementary School (the Project); and

WHEREAS, Funding for the Project was included in the SFPUC's capital plan for small renewable energy projects; and

WHEREAS, The SFPUC has nearly completed the construction and installation of the Project, and expects that it may begin generating electricity in September 2012; and

WHEREAS, In a determination dated June 12, 2012, the City and County of San Francisco Planning Department found that the Project was categorically exempt from environmental review under the California Environmental Quality Act; and

WHEREAS, The SFPUC must enter into a Generating Facility Interconnection Agreement (Agreement) with Pacific Gas and Electric Company (PG&E) to interconnect the Project to the electrical grid; and

WHEREAS, The Agreement is based on a PG&E form agreement approved by the California Public Utilities Commission that is not subject to negotiation; and

WHEREAS, The term of the Agreement is commensurate with the useful life of the Project in order to ensure that the Project can remain interconnected to PG&E's electrical system for its useful life, which is expected to exceed ten (10) years; and

WHEREAS, The Agreement is subject to approval by the Board of Supervisors, pursuant to San Francisco Charter section 9.118(b), because the term of the Agreement is likely to exceed ten (10) years; and

WHEREAS, The Agreement is subject to termination by the City for any reason upon sixty (60) days notice; and

WHEREAS, The City Attorney has approved the limitation of liability language set forth in section 7 of the Agreement; and

WHEREAS, The City's Risk Manager has approved the insurance language set forth in section 8 of the Agreement; and

WHEREAS, The terms and conditions of the Agreement do not require the payment of any fees or costs to PG&E from the SFPUC; and

WHEREAS, A copy of the Agreement is on file with the Clerk of the Board of Supervisors in File No. 120938, which is hereby declared to be a part of this resolution as if set forth fully herein; and

WHEREAS, The Board of Supervisors recommends that, in connection with the Project, the SFPUC work with the SFUSD to develop educational materials to instruct the

students of Alvarado Elementary School about renewable energy and the solar power facility located at their school, now, therefore, be it

RESOLVED, That the Board of Supervisors supports and encourages the use and development of renewable energy within the City and County of San Francisco, including by installing solar power projects on buildings owned by the San Francisco Unified School District and instructing students at those schools about the benefits of renewable energy; and, be it

FURTHER RESOLVED, That the Board of Supervisors, pursuant to San Francisco Charter section 9.118(b), authorizes the San Francisco Public Utilities Commission General Manager to enter into a Generating Facility Interconnection Agreement with Pacific Gas and Electric Company for the solar power project installed at the Alvarado Elementary School.

Edwin M. Lee, Mayor
Naomi Kelly, City Administrator

OFFICE OF THE CITY ADMINISTRATOR RISK MANAGEMENT DIVISION

August 13, 2012

Pacific Gas and Electric Company
Attention: Tariffs and Compliance Department
PO Box 770000
Mail Code B8C
San Francisco, CA 94177

RE: Generating Facility Interconnection Agreement between Pacific and Electric Company and City and County of San Francisco

This letter certifies that the City and County of San Francisco is self-insured and self-funded for the following insurance programs, which cover the City and County of San Francisco, its officers, and employees.

General Liability with limits of $2,000,000 per occurrence for bodily injury, property damage, including premises-operations, products and completed operations, hazard, explosion, collapse and underground and contractual liability for liability arising out the City's negligence.

The City and County of San Francisco's self insurance program is not commercial insurances and has no legal capacity to name another entity as additional insured.

Do not hesitate to contact this office should you have any questions.

Sincerely,

Matt Hansen/ef

Matt Hansen
Director

cc: Deborah Luthi, SFPUC
Jaime Seidel

25 Van Ness Avenue, Suite 750, San Francisco, CA 94102
Telephone (415) 554-2303; Fax (415) 554-2357

[Master License Agreement - Photovoltaic Power Projects]

Resolution authorizing the General Manager of the San Francisco Public Utilities Commission to enter into a long term Master License Agreement for the installation of photovoltaic power projects on San Francisco Unified School District buildings, pursuant to San Francisco Charter Section 9.118.

WHEREAS, San Francisco voters in November 2001 adopted Propositions B and H encouraging the development and use of renewable energy in the City and County of San Francisco; and,

WHEREAS, The San Francisco Public Utilities Commission (SFPUC) is responsible for implementing the installation of renewable energy projects of the City and County of San Francisco; and,

WHEREAS, The San Francisco Unified School District (SFUSD) owns many buildings in the City and County of San Francisco that are suitable for the installation of photovoltaic power projects; and,

WHEREAS, The SFUSD is willing to enter into a Master License Agreement with the SFPUC enabling the SFPUC to install and maintain photovoltaic power projects on certain SFUSD buildings that the SFPUC and SFUSD agree are suitable for such use; and,

WHEREAS, Under the Master License Agreement, the SFPUC will have ten years to identify SFUSD buildings that are suitable for photovoltaic power projects; and,

WHEREAS, The Master License Agreement will not expire until 25 years after the date the SFPUC notifies the SFUSD that the SFPUC will commence operation of the last photovoltaic power project on an SFUSD building; and,

WHEREAS, Due to the expense of installing the photovoltaic power projects, and the fact that such projects will have long useful lives, it is to the benefit of the SFPUC that the Master License Agreement have a lengthy term; and,

WHEREAS, The City's Risk Manager has approved the Indemnity language set forth in Section 30 of the Master License Agreement; and,

WHEREAS, In Resolution No, 12-0044 dated March 13, 2012, the SFPUC approved the Master License Agreement; and,

WHEREAS, In Resolution No. 121-10W17 dated January 10, 2012, the SFUSD approved the Master License Agreement; and,

WHEREAS, A copy of the Master License Agreement is on file with the Clerk of the Board of Supervisors in File No. 120246 which is hereby declared to be a part of this resolution as if set forth fully herein; now, therefore, be it

RESOLVED, The Board of Supervisors supports and encourages efforts of the SFPUC to use and develop renewable energy within the City and County of San Francisco; and, be it

FURTHER RESOLVED, That the Board of Supervisors authorizes the San Francisco Public Utilities Commission General Manager to enter into the Master License Agreement with the San Francisco Unified School District for the installation of photovoltaic power projects on certain San Francisco Unified School District buildings, pursuant to San Francisco Charter section 9.118; and, be it

FURTHER RESOLVED, That the Board of Supervisors authorizes the San Francisco Public Utilities Commission General Manager to agree to such amendments or modifications to the Master License Agreement that may be reasonable and necessary to effectuate the purposes of the Master License Agreement.

City and County of San Francisco
Tails
Resolution

City Hall
1 Dr. Carlton B. Goodlett Place
San Francisco, CA 94102-4689

File Number: 120246 **Date Passed:** April 10, 2012

Resolution authorizing the General Manager of the San Francisco Public Utilities Commission to enter into a long term Master License Agreement for the installation of photovoltaic power projects on San Francisco Unified School District buildings, pursuant to San Francisco Charter Section 9.118.

April 04, 2012 Budget and Finance Sub-Committee - RECOMMENDED

April 10, 2012 Board of Supervisors - ADOPTED

Ayes: 11 - Avalos, Campos, Chiu, Chu, Cohen, Elsbernd, Farrell, Kim, Mar, Olague and Wiener

File No. 120246

I hereby certify that the foregoing Resolution was ADOPTED on 4/10/2012 by the Board of Supervisors of the City and County of San Francisco.

Angela Calvillo
Clerk of the Board

Mayor

4/19/2012
Date Approved

Pacific Gas and Electric Company™

WE DELIVER ENERGY.℠

This Generating Facility Interconnection Agreement ("Agreement") is entered into by and between San Francisco Public Utilities Commission, a Governmental Agency ("Producer"), and Pacific Gas and Electric Company ("PG&E") a California Corporation. Producer and PG&E are sometimes also referred to in this Agreement jointly as "Parties" or individually as "Party." In consideration of the mutual promises and obligations stated in this Agreement and its attachments, the Parties agree as follows:

1. SCOPE AND PURPOSE

This Agreement provides for Producer to interconnect and operate a Generating Facility in parallel with PG&E's Distribution System to serve the electrical loads connected to the electric service account that PG&E uses to interconnect Producer's Generating Facility (or, where permitted under Section 218 of the California Public Utilities Code ("PUC"), the electric loads of an on-site or neighboring party lawfully connected to Producer's Generating Facility through Producer's circuits).

2. SUMMARY AND DESCRIPTION OF PRODUCER'S GENERATING FACILITY

2.1 A description of the Generating Facility, including a summary of its significant components and a single-line diagram showing the general arrangement of how Producer's Generating Facility and loads are interconnected with PG&E's Distribution System, are attached to and made a part of this Agreement. (Supplied by Producer as Appendix A).

2.2 Generating Facility identification number: 30S90286 (Assigned by PG&E)

2.3 Producer's electric service account number: 1034392020 (Assigned by PG&E)

2.4 Name and address used by PG&E to locate the electric service account used to interconnect the Generating Facility with PG&E's Distribution System:

Name: San Francisco Unified School District
Address: 625 Douglass Street
City/Zip Code: San Francisco, CA 94114

2.5 The Gross Nameplate Rating of the Generating Facility is: 50 kW.

2.6 The Net Nameplate Rating of the Generating Facility is _____ kW.

2.7 The expected annual energy production of the Generating Facility is _____ kWh.

2.8 For the purpose of securing the Competition Transition Charge exemption available under Section 372 of the California Public Utilities Code ("PUC"), Producer hereby declares that the Generating Facility ☐ does / ☒ does not meet the requirements for "Cogeneration" as such term is used in Section 216.6 of the California Public Utilities Code.

2.9 The Generating Facility's expected date of Initial Operation is August 31, 2012. The expected date of Initial Operation shall be within two years of the date of this Agreement.

3. DOCUMENTS INCLUDED; DEFINED TERMS

3.1 This Agreement includes the following exhibits which are specifically incorporated herein and made a part of this Agreement.

Appendix A- Description of Generating Facility and Single-Line Diagram (Supplied by Producer)

Appendix B- Copies of Rules 2 and 21 and other selected rules and tariffs of PG&E (Supplied by PG&E)

Appendix C- A Copy of PG&E's Agreement for Installation of Allocation of Special Facilities for Parallel Operation of Nonutility-Owned Generation and/or Electrical Standby Service (Form 79-280) ("Special Facility Agreement"), if applicable, (Formed by the Parties)

3.2 When initially capitalized, whether in the singular or in the plural, the terms used herein shall have the meanings assigned to them either in this Agreement or in PG&E's Rule 21, Section H.

4. TERM AND TERMINATION

4.1 This Agreement shall become effective as of the last date entered in Section 16, below. The Agreement shall continue in full force and effect until the earliest date that one of the following events occurs:

(a) The Parties agree in writing to terminate the Agreement.

(b) Unless otherwise agreed in writing by the Parties, at 12:01 A.M. on the day following the date the electric service account through which Producer's Generating Facility is interconnected to PG&E's Distribution System is closed or terminated.

(c) At 12:01 A.M. on the 61st day after Producer or PG&E provides written Notice pursuant to Section 9 below to the other Party of Producer's or PG&E's intent to terminate this Agreement.

4.2 Producer may elect to terminate this Agreement pursuant to the terms of Section 4.1(c) for any reason. PG&E may elect to terminate this Agreement pursuant to the terms of Section 4.1(c) for one or more of the following reasons:

(a) A change in applicable rules, tariffs, and regulations, as approved or directed by the Commission, or a change in any local, state or federal law, statute or regulation, either of which materially alters or otherwise affects PG&E's ability or obligation to perform PG&E's duties under this Agreement; or,

(b) Producer fails to take all corrective actions specified in PG&E's Notice that Producer's Generating Facility is out of compliance with the terms of this Agreement within the time frame set forth in such Notice; or,

(c) Producer fails to interconnect and operate the Generating Facility per the terms of this Agreement prior to 120 days after the date set forth in Section 2.9, above, as the Generating Facility's expected date of Initial Operation; or,

(d) Producer abandons the Generating Facility. PG&E shall deem the Generating Facility to be abandoned if PG&E determines, in its sole opinion, the Generating Facility is non-operational and Producer does not provide a substantive response to PG&E Notice of its intent to terminate this Agreement as a result of Producer's apparent abandonment of the Generating Facility affirming Producer's intent and ability to continue to operate the Generating Facility.

4.3 Notwithstanding any other provisions of this Agreement, PG&E shall have the right to unilaterally file with the Commission, pursuant to the Commission's rules and regulations, an application to terminate this Agreement.

4.4 Any agreements attached to and incorporated into this Agreement shall terminate concurrently with this Agreement unless the Parties have agreed otherwise in writing.

5. GENERATING FACILITY, OPERATION AND CERTIFICATION REQUIREMENTS

5.1 The electric power produced by Producer's Generating Facility shall be used solely to serve electrical loads connected to the electric service account that PG&E uses to interconnect Producer's Generating Facility (or, where permitted under Section 218 of the PUC, the electric loads of an on-site or neighboring party lawfully connected to Producer's Generating Facility through Producer's circuits). Producer shall attempt in good faith to regulate the electric power output of Producer's Generating Facility so as to prevent the flow of electric energy from the Generating Facility to PG&E's electric system. Unless otherwise agreed upon in writing by the Parties, this Agreement does not provide for, nor otherwise require PG&E to receive, purchase, transmit, distribute, or store the electrical power produced by Producer's Generating Facility.

5.2 If Producer declares that its Generating Facility meets the requirements for "Cogeneration" as such term is used in Section 216.6 of the PUC (or any successor definition of "Cogeneration") ("Cogeneration Requirements"), Producer warrants that, beginning on the date of Initial Operation and continuing throughout the term of this Agreement, its Generating Facility shall continue to meet such Cogeneration Requirements. If Producer becomes aware that its Generating Facility has ceased to meet the Cogeneration Requirements, Producer shall promptly provide PG&E with Notice of such change pursuant to Section 9.1 below. If at any time during the term of this Agreement PG&E determines in its sole discretion that Producer's Generating Facility may no longer meet the Cogeneration Requirements, PG&E may require Producer to provide evidence that its Generating Facility continues to meet the Cogeneration Requirements within 15 business days of PG&E's request for such evidence. Additionally, PG&E may periodically (typically, once per year) inspect Producer's Generating Facility and/or require documentation from Producer to monitor the Generating Facility's compliance with Section 216.6 of the PUC. If PG&E determines in its sole judgment that Producer either failed to provide evidence in a timely manner or that it provided insufficient evidence that its Generating Facility continues to meet the Cogeneration Requirements, then the Cogeneration status of the Generating Facility shall be deemed ineffective until such time as Producer again demonstrates to PG&E's reasonable satisfaction that the Generating Facility meets the requirements for a Cogeneration facility (the "Status Change").

5.2.1 PG&E shall revise its records and the administration of this Agreement to reflect the Status Change and provide Notice to Producer of the Status Change pursuant to Section 9.1 below. This Notice shall specify the effective date of the Status Change. This date shall be the first day of the calendar year for which PG&E determines in its sole discretion that the Generating Facility first ceased to meet the Cogeneration Requirements. PG&E's Notice shall include an invoice for Competition Transition Charges ("CTCs") that were not previously billed during the period between the effective date of the Status Change and the date of the Notice in reliance upon Producer's representations that the Generating Facility complied with the Cogeneration Requirements and therefore was eligible for the exemption from CTCs available under Section 372 of the PUC.

5.2.2 Any amounts to be paid or refunded by Producer, as may be invoiced by PG&E pursuant to the terms of this Section 5.2, shall be paid to PG&E within 30 days of Producer's receipt of such invoice.

6. INTERCONNECTION FACILITIES

6.1 Producer and/or PG&E, as appropriate, shall provide Interconnection Facilities that adequately protect PG&E's Distribution System, personnel, and other persons from damage or injury, which may be caused by the operation of Producer's Generating Facility.

6.2 Producer shall be solely responsible for the costs, design, purchase, construction, operation, and maintenance of the Interconnection Facilities that Producer owns.

6.3 If the provisions of PG&E's Rule 21, or any other tariff or rule approved by the Commission, requires PG&E to own and operate a portion of the Interconnection Facilities, Producer and PG&E shall promptly execute an Special Facilities Agreement that establishes and allocates responsibility for the design, installation, operation, maintenance, and ownership of the Interconnection Facilities. This Special Facilities Agreement shall be attached to and made a part of this Agreement as Appendix C.

7. LIMITATION OF LIABILITY

Each Party's liability to the other Party for any loss, cost, claim, injury, liability, or expense, including reasonable attorney's fees, relating to or arising from any act or omission in its performance of this agreement, shall be limited to the amount of direct damage actually incurred. In no event shall either Party be liable to the other Party for any indirect, special, consequential, or punitive damages of any kind whatsoever.

8. INSURANCE

8.1 In connection with Producer's performance of its duties and obligations under this Agreement, Producer shall maintain, during the term of this Agreement, general liability insurance with a combined single limit of not less than:

(a) Two million dollars ($2,000,000) for each occurrence if the Gross Nameplate Rating of Producer's Generating Facility is greater than one hundred (100) kW;

(b) One million dollars ($1,000,000) for each occurrence if the Gross Nameplate Rating of Producer's Generating Facility is greater than twenty (20) kW and less than or equal to one hundred (100) kW; and

(c) Five hundred thousand dollars ($500,000) for each occurrence if the Gross Nameplate Rating of Producer's Generating Facility is twenty (20) kW or less.

(d) Two hundred thousand dollars ($200,000) for each occurrence if the Gross Nameplate Rating of Producer's Generating Facility is ten (10) kW or less and Producer's Generating Facility is connected to an account receiving residential service from PG&E.

Such general liability insurance shall include coverage for "Premises-Operations, Owners and Contractors Protective, Products/Completed Operations Hazard, Explosion, Collapse, Underground, Contractual Liability, and Broad Form Property Damage including Completed Operations."

8.2 The general liability insurance required in Section 8.1 shall, by endorsement to the policy or policies, (a) include PG&E as an additional insured; (b) contain a severability of interest clause or cross-liability clause; (c) provide that PG&E shall not by reason of its inclusion as an additional insured incur liability to the insurance carrier for payment of premium for such insurance; and (d) provide for thirty (30) calendar days' written notice to PG&E prior to cancellation, termination, alteration, or material change of such insurance.

8.3 If Producer's Generating Facility is connected to an account receiving residential service from PG&E and the requirement of Section 8.2(a) prevents Producer from obtaining the insurance required in Section 8.1, then upon Producer's written Notice to PG&E in accordance with Section 9.1, the requirements of Section 8.2(a) shall be waived.

8.4 Evidence of the insurance required in Section 8.2 shall state that coverage provided is primary and is not in excess to or contributing with any insurance or self-insurance maintained by PG&E.

8.5 Producer agrees to furnish the required certificates and endorsements to PG&E prior to Initial Operation. PG&E shall have the right to inspect or obtain a copy of the original policy or policies of insurance.

8.6 If Producer is self-insured with an established record of self-insurance, Producer may comply with the following in lieu of Sections 8.1 through 8.4:

(a) Producer shall provide to, PG&E, at least thirty (30) calendar days prior to the date of Initial Operation, evidence of an acceptable plan to self-insure to a level of coverage equivalent to that required under Section 8.1.

(b) If Producer ceases to self-insure to the level required hereunder, or if Producer are unable to provide continuing evidence of Producer's ability to self-insure, Producer agrees to immediately obtain the coverage required under Section 8.1.

8.7 All insurance certificates, statements of self insurance, endorsements, cancellations, terminations, alterations, and material changes of such insurance shall be issued and submitted to the following:

Pacific Gas and Electric Company
Attention Tariffs and Compliance Department
PO Box 770000
Mail Code B8C
San Francisco, California 94177

9. NOTICES

9.1 Any written notice, demand, or request required or authorized in connection with this Agreement ("Notice") shall be deemed properly given if delivered in person or sent by first class mail, postage prepaid, to the person specified below:

If to PG&E: Pacific Gas and Electric Company
Attention: Rates and Tariffs Department
P.O. Box 770000
Mail Code B8C
San Francisco, California 94177
Phone: (415) 973-0335
FAX: (415) 973-2384

If to Producer: Producer Name: San Francisco Public Utilities Commission
Address: 525 Golden Gate Avenue, 7th floor
City: San Francisco, CA 94102
Phone: ( ) (415) 554-1537
FAX: ( )

9.2 A Party may change its address for Notices at any time by providing the other Party Notice of the change in accordance with Section 9.1.

9.3 The Parties may also designate operating representatives to conduct the daily communications, which may be necessary or convenient for the administration of this Agreement. Such designations, including names, addresses, and phone numbers may be communicated or revised by one Party's Notice to the other.

10. REVIEW OF RECORDS AND DATA

10.1 PG&E shall have the right to review and obtain copies of Producer's operations and maintenance records, logs, or other information such as, unit availability, maintenance outages, circuit breaker operation requiring manual reset, relay targets and unusual events pertaining to Producer's Generating Facility or its interconnection with PG&E's Distribution System.

10.2 Producer authorizes to release to the California Energy Commission (CEC) information regarding Producer's facility, including customer name, location, size, and operational characteristics of the unit, as request6ed from time to time pursuant to the CEC's rules and regulations.

11. ASSIGNMENT

Producer shall not voluntarily assign its rights nor delegate its duties under this Agreement without PG&E's written consent. Any assignment or delegation Producer makes without PG&E's written consent shall not be valid. PG&E shall not unreasonably withhold its consent to Producer's assignment of this Agreement.

12. NON-WAIVER

None of the provisions of this Agreement shall be considered waived by a Party unless such waiver is given in writing. The failure of a Party to insist in any one or more instances upon strict performance of any of the provisions of this Agreement or to take advantage of any of its rights hereunder shall not be construed as a waiver of any such provisions or the relinquishment of any such rights for the future, but the same shall continue and remain in full force and effect.

13. GOVERNING LAW, JURISDICTION OF COMMISSION, INCLUSION OF PG&E's TARIFF SCHEDULES AND RULES

13.1 This Agreement shall be interpreted, governed, and construed under the laws of the State of California as if executed and to be performed wholly within the State of California without giving effect to choice of law provisions that might apply to the law of a different jurisdiction.

13.2 This Agreement shall, at all times, be subject to such changes or modifications by the Commission as it may from time to time direct in the exercise of its jurisdiction.

13.3 The interconnection and services provided under this Agreement shall at all times be subject to the terms and conditions set forth in the Tariff Schedules and Rules applicable to the electric service provided by, PG&E, which Tariff Schedules and Rules are hereby incorporated into this Agreement by this reference.

13.4 Notwithstanding any other provisions of this Agreement, PG&E shall have the right to unilaterally file with the Commission, pursuant to the Commission's rules and regulations, an application for change in rates, charges, classification, service, tariff or rule or any agreement relating thereto.

14. AMENDMENT AND MODIFICATION

This Agreement can only be amended or modified in writing, signed by both Parties.

15. ENTIRE AGREEMENT

This Agreement, including any incorporated Tariff Schedules and rules, contains the entire agreement and understanding between the Parties, their agents, and employees as to the subject matter of this Agreement. Each party also represents that in entering into this Agreement, it has not relied on any promise, inducement, representation, warranty, agreement or other statement not set forth in this Agreement or in the incorporated tariff schedules and rules.

16. SIGNATURES

IN WITNESS WHEREOF, the Parties hereto have caused two originals of this Agreement to be executed by their duly authorized representatives. This Agreement is effective as of the last date set forth below.

PRODUCER'S NAME		PACIFIC GAS AND ELECTRIC COMPANY	
By:		By:	
Nam	Jamie Seidel	Name:	
Title:	Utility Specialist	Title:	
Date:		Date:	

APPENDIX A
DESCRIPTION OF GENERATING FACILITY
AND SINGLE-LINE DIAGRAM,
(Provided by Producer)

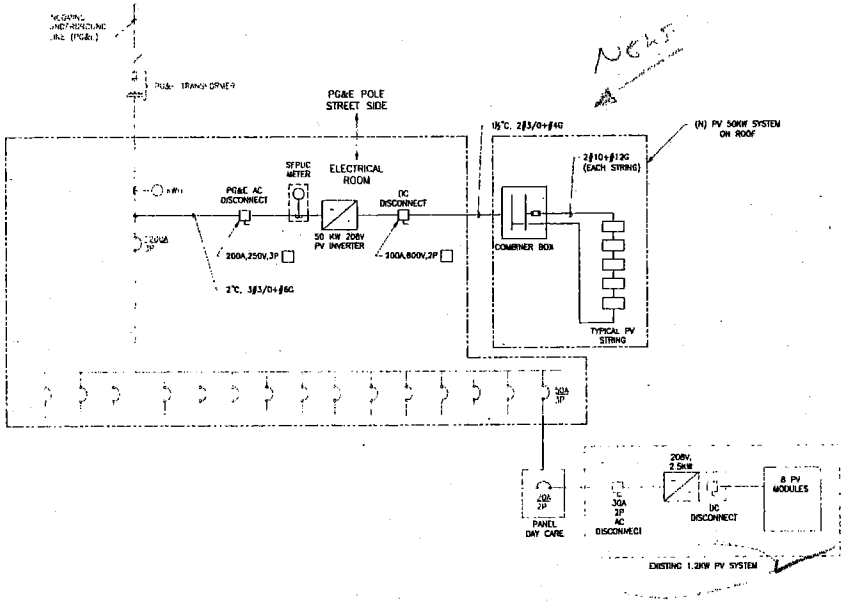

SINGLE LINE DIAGRAM WITH (N) 50KW & (E) 1.2KW PV SYSTEM TIE-IN (1)

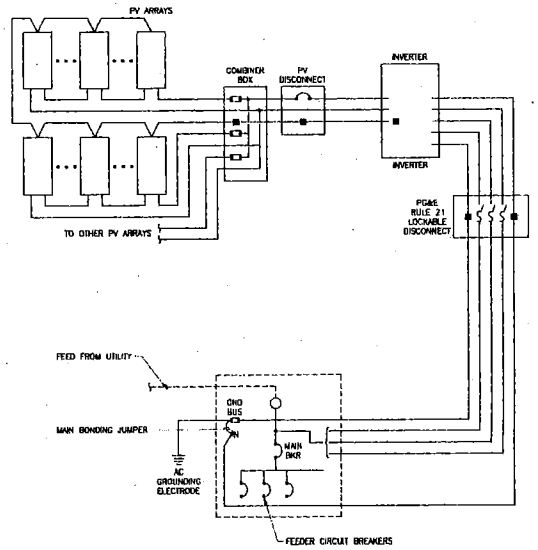

NEW 50KW PV SYSTEM GROUNDING SINGLE LINE (2)

SHEET NOTES:

- ☐ CAT # SQUARE D #DU324 OR EQUAL
- ☐ CAT # COOPER BUSSMANN # BD164NR OR EQUAL

AEPC Group, LLC

TM

ALVARADO ELEMENTARY SCHOOL
PHOTOVOLTAIC (PV) PROJECT
625 Douglass St., San Francisco CA

DSA REVIEW	2/28/12	A
DSA PERMIT	04/04/12	B
DSA BACK CHECK	06/20/12	C
PG&E SUBMITTAL	07/11/12	D

REGISTERED PROFESSIONAL ENGINEER
MICHAEL A. MAYER
E 17115
EXP. 9/30/13
ELECTRICAL
STATE OF CALIFORNIA

SHEET INFORMATION

ELECTRICAL
SINGLE LINE
DIAGRAMS

E5.1

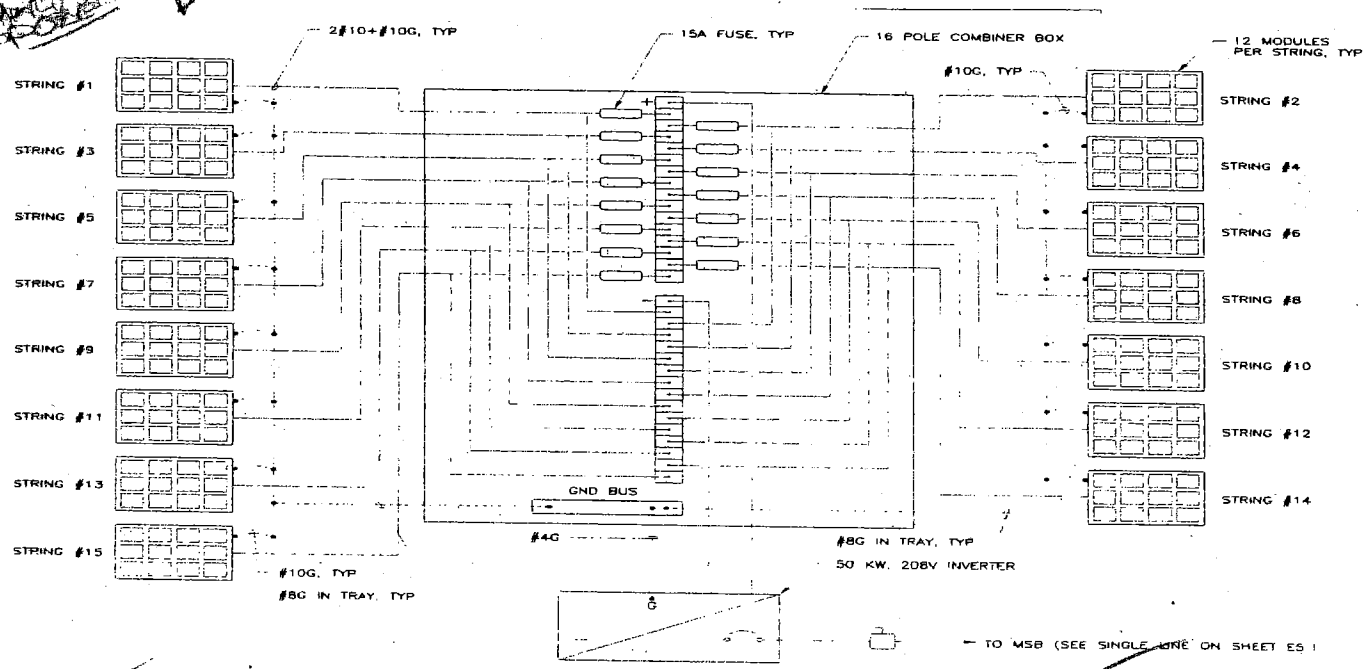

CANADIAN SOLAR MODULES-ADVANCED ENERGY INVERTER

2

STRING CALCULATIONS/ADVANCED

PV MODULE:	CANADIAN SOLAR CS6X-280
NUMBER OF MODULES PER STRING	12 MODULES
VOLTAGE PER MODULE (VMP) (1)	36.0VDC
OPEN CIRCUIT VOLTAGE (VOC) (1)	44.6VDC
VOLTAGE CORRECTION FACTOR (VC-NEC TABLE 690.7) OR VOC TEMP COEFFICIENT	1.12/-0.160V/DEG C
SHORT CIRCUIT CURRENT PER MODULE (ISC) (1)	8.3A
MAX CIRCUIT CURRENT PER STRING (NEC 690.8.A.1)	10.4A
REQUIRED CONDUCTOR AMPACITY (NEC 690.8.B.1)	13.0A
FUSE SIZE	15A
CONDUCTOR CHOSEN	#10 RHW-2 OR USE-2
CONDUCTOR TEMPERATURE	90°
CONDUCTOR AMPACITY	40A
AMBIENT TEMP DERATING (NEC TABLE 310.16) (2)	0.91
CONDUCTOR DERATED AMPACITY	36.4A
LONGEST STRING DISTANCE	200 FT
WARMEST DAY VOLTAGE	357VDC
COOLEST DAY VOLTAGE	593VDC
WORST CASE VOLTAGE DROP	1.18%

(1) BASED ON PANEL MANUFACTURER PUBLISHED DATA
(2) BASED UPON RECORD HIGH AMBIENT TEMP (°F) 103 °F
(3) BASED UPON RECORD LOW AMBIENT TEMP (°F) 23 °F
NOTE: WEATHER DATA OBTAINED FROM WEATHER.COM

COMBINER CALCULATIONS
COMBINER BOX

PV MODULE:	CANADIAN SOLAR CS6X-280
NUMBER OF MODULES PER STRING	12 MODULES
NUMBER OF STRINGS PER COMBINER	15 STRINGS
VOLTAGE PER STRING (1)	357VDC
SHORT CIRCUIT CURRENT PER STRING (ISC) (1)	8.3A
REQUIRED CONDUCTOR AMPACITY (# STRINGS*ISC*1.56)	194.2A
CONDUCTOR CHOSEN	#3/0 THWN-2
CONDUCTOR TEMPERATURE	90°
CONDUCTOR AMPACITY	225A
AMBIENT TEMP DERATING (NEC TABLE 310.16) (2)	0.91
CONDUCTOR DERATED AMPACITY	205A
LONGEST CONDUCTOR DISTANCE FROM COMBINER	200 FT
WORST CASE VOLTAGE DROP (%)	1.74%

(1) REFER TO STRING CALCULATIONS FOR MORE INFORMATION
(2) BASED UPON RECORD HIGH AMBIENT TEMP (°F) 103 °F

AEPC Group, LLC
DESIGN - CONSTRUCTION - MANAGEMENT
Northern California Office:
5000 Executive Parkway, Suite 475
San Ramon, CA 94583
Telephone: 925-277-3080 / Facsimile: 925-824-0102

TM
TEN/FREEMAN MAHREN ENGINEERS, INC.
Structural Design and Engineering
414 Mason Street, suite 605
San Francisco, CA 94102
Ph. 415.772.9991
Fax. 415.772.9993

JOB TITLE

ALVARADO ELEMENTARY SCHOOL
PHOTOVOLTAIC (PV) PROJECT
625 Douglass St., San Francisco CA

REVISIONS

50% REVIEW	09.12	A
DSA PERMIT	04.12	B

STAMP

REGISTERED PROFESSIONAL ENGINEER
MULAPPER ALI KHAN
E 17115
EXP 9/30/13
ELECTRICAL
STATE OF CALIFORNIA

SHEET INFORMATION

ELECTRICAL
PV RISER
AND CALCS
CANADIAN SOLAR

SHEET

E6.1

APPENDIX B
RULES "2" AND "21"
(and any other Tariffs pertinent to the situation)
(Provided by PG&E)

(Note: PG&E's tariffs are included for reference only and shall at all times be subject to such changes or modifications by the Commission as the Commission may, from time to time, direct in the exercise of its jurisdiction.)

APPENDIX C
(If Applicable)
RULE 21 "SPECIAL FACILITIES" AGREEMENT
(Formed between the Parties)