File No. 130837 Committee Item No. 6
Board Item No. 37

COMMITTEE/BOARD OF SUPERVISORS

AGENDA PACKET CONTENTS LIST

Committee: Land Use and Economic Development **Date** October 21, 2013

Board of Supervisors Meeting **Date** October 29, 2013

Cmte	Board	
☐	☐	**Motion**
☐	☐	**Resolution**
☒	☒	**Ordinance**
☒	☒	**Legislative Digest**
☐	☐	**Budget and Legislative Analyst Report**
☐	☐	**Youth Commission Report**
☐	☐	**Introduction Form**
☒	☒	**Department/Agency Cover Letter and/or Report**
☐	☐	**MOU**
☐	☐	**Grant Information Form**
☐	☐	**Grant Budget**
☐	☐	**Subcontract Budget**
☐	☐	**Contract/Agreement**
☐	☐	**Form 126 – Ethics Commission**
☐	☐	**Award Letter**
☐	☐	**Application**
☐	☐	**Public Correspondence**

OTHER **(Use back side if additional space is needed)**

☒	☒	San Francisco Residential Building Code Amendments
☒	☒	California Residential Code Amendments
☒	☒	Environmental Review Determination, dtd 10/16/13
☒	☒	Building Inspection Commission Recommendation, dtd 8/22/13
☒	☒	Code Advisory Committee Recommendation, dtd 8/16/13
☐	☐	
☐	☐	
☐	☐	
☐	☐	
☐	☐	
☐	☐	

Completed by: Alisa Miller **Date** October 18, 2013
Completed by: Alisa Miller **Date** October 24, 2013

FILE NO. 130837 ORDINANCE NO.

[Building Code - Residential Building Requirements]

Ordinance incorporating the provisions of the 2013 California Residential Code into various chapters of the Building Code with local amendments, and adding Chapter 36 to serve as a directory of where such provisions may be found in the Building Code; adopting environmental findings and findings of local conditions under the California Health and Safety Code; providing for an operative date of January 1, 2014; and directing the Clerk of the Board to forward the legislation to the State Building Standards Commission as required by State law.

NOTE: **Unchanged Code text and uncodified text** are in plain Arial font.
Additions to Codes are in *single-underline italics Times New Roman font*.
Deletions to Codes are in ~~*strikethrough italics Times New Roman font*~~.
Board amendment additions are in double-underlined Arial font.
Board amendment deletions are in ~~strikethrough Arial font~~.
Asterisks (* * * *) indicate the omission of unchanged Code subsections or parts of tables.

Be it ordained by the People of the City and County of San Francisco:

Section 1. Environmental Findings. The Planning Department has determined that the actions contemplated in this ordinance comply with the California Environmental Quality Act (California Public Resources Code Sections 21000 et seq.). Said determination is on file with the Clerk of the Board of Supervisors in File No. 130837 and is incorporated herein by reference.

Section 2. General Findings.

A. The State of California adopts a new California Building Standards Code every three years that goes into effect throughout the State 180 days after publication. The

California Building Standards Code is contained in Title 24 of the California Code of Regulations, and consists of several parts that are based upon model codes with amendments made by various State agencies. The California Residential Code is Part 2.5 of Title 24 of the California Code of Regulations. The 2013 California Residential Code will go into effect throughout California on January 1, 2014.

B. Local jurisdictions are required to enforce the California Residential Code but they may also enact more stringent standards when reasonably necessary because of local conditions caused by climate, geology or topography.

C. San Francisco's residential building standards are contained in the San Francisco Building Code. In this ordinance, San Francisco incorporates the provisions of the 2013 California Residential Code into various chapters of the San Francisco Building Code with local amendments, and adds Chapter 36 to serve as a directory of where such provisions may be found in the San Francisco Building Code.

D. On August 21, 2013, at a duly noticed public hearing, the Building Inspection Commission considered this legislation.

Section 3. Findings regarding Local Conditions.

A. California Health & Safety Code Section 17958.7 provides that before making any changes or modifications to the California Residential Code and any other applicable provisions published by the State Building Standards Commission, the governing body must make an express finding that each such change or modification is reasonably necessary because of specified local conditions, and the findings must be filed with the State Building Standards Commission before the local changes or modifications can go into effect.

B. The City and County of San Francisco is unique among California communities with respect to local climatic, geological, topographical, and other conditions. A specific list of findings that support San Francisco's modifications to the 2013 California Residential Code

and a section-by-section correlation of each modification with a specific numbered finding are contained in Exhibit A entitled "Standard Findings for San Francisco Amendments" to the ordinance enacting the San Francisco Building Code, on file with the Clerk of the Board of Supervisors in File No. 130836, which is hereby declared to be part of this ordinance as if set forth fully therein.

C. Pursuant to California Health and Safety Code Section 17958.7, the Board of Supervisors finds and determines that the local conditions described in Exhibit A to the ordinance enacting the 2013 San Francisco Building Code constitute a general summary of the most significant local conditions giving rise to the need for modification of the 2013 California Residential Code provisions published by the State Building Standards Commission. The Board of Supervisors further finds and determines that the proposed modifications are reasonably necessary based upon the local conditions set forth in said Exhibit A.

Section 4. The provisions of the 2013 California Residential Code as amended by San Francisco are hereby incorporated into various chapters of the San Francisco Building Code and Chapter 36 is added to serve as a directory of where such provisions may be found in the San Francisco Building Code.

Section 5. Continuance of Actions Under Prior Code. Nothing contained in this ordinance shall be construed as abating any action now pending under or by virtue of any ordinance of the City and County of San Francisco hereby repealed, nor shall this ordinance be construed as discontinuing, abating, modifying or altering any penalties accruing, or to accrue, or as waiving any right of the City under any such ordinance.

Section 6. Severability. If any section, subsection, sentence, clause, or phrase of this ordinance is, for any reason, held to be unconstitutional, such decision shall not affect the validity of the remaining portions of this ordinance. The Board of Supervisors hereby declares

that it would have passed this ordinance, and each section, subsection, sentence, clause, or phrase of this Ordinance, irrespective of the fact that any one or more sections, subsections, sentences, clauses, or phrases be declared unconstitutional.

Section 7. Effective and Operative Dates. This ordinance shall become effective 30 days after enactment. Enactment occurs when the Mayor signs the ordinance, the Mayor returns the ordinance unsigned or does not sign the ordinance within ten days of receiving it, or the Board of Supervisors overrides the Mayor's veto of the ordinance. This ordinance shall take effect and be in full force on and after either January 1, 2014 or its effective date if the effective date is later.

Section 8. Directions to Clerk. Upon final passage of this ordinance, the Clerk of the Board of Supervisors is hereby directed to transmit this ordinance to the State Building Standards Commission pursuant to the applicable provisions of State law.

APPROVED AS TO FORM:
DENNIS J. HERRERA, City Attorney

By: Judith A. Boyajian
JUDITH A. BOYAJIAN
Deputy City Attorney

n:\legana\as2013\1400074\00866358.doc

FILE NO. 130837

LEGISLATIVE DIGEST

[Building Code – Residential Building Requirements]

Ordinance incorporating the provisions of the 2013 California Residential Code into various chapters of the San Francisco Building Code with local amendments, and adding Chapter 36 to serve as a directory of where such provisions may be found in the San Francisco Building Code; adopting environmental findings and findings of local conditions under the California Health and Safety Code; providing for an operative date of January 1, 2014; and directing the Clerk of the Board to forward the legislation to the State Building Standards Commission as required by State law.

Existing Law

The San Francisco Building Code regulates and controls the design, construction, quality of materials, use and occupancy, location, maintenance and demolition of all buildings and structures, and quarrying, grading, excavation and filling of land in the City and County of San Francisco. The current Code consists of the 2009 International Building Code, as amended by the 2010 California Building Code, and as further amended by San Francisco. San Francisco's residential construction requirements are contained in the Building Code.

Amendments to Current Law

On January 1, 2014, a new California Residential Code will go into effect throughout the State. San Francisco's local amendments to the 2010 California Residential Code will not be carried forward unless re-enacted and made applicable to the 2013 California Residential Code. Therefore, as in past State code adoption cycles, San Francisco will repeal its existing Building Code in its entirety and adopt a new Building Code that consists of the new model code, as amended by the State of California, and as further amended by San Francisco. San Francisco's local amendments to the 2013 California Residential Code will be carried forward and incorporated into the 2013 San Francisco Building Code with only minor technical changes.

The San Francisco amendments are not integrated into the text of the California Building Code but rather are separately printed in a stand-alone document. Therefore, the user must consult both texts in order to determine the complete code requirement. In the San Francisco amendments, additions to the 2013 California Residential Code are shown in bold type; deletions are shown with strikethrough.

Background Information

Generally, the State of California adopts a new California Building Standards Code every three years that goes into effect throughout the State 180 days after publication. In this Code cycle, the California Building Standards Code will go into effect on January 1, 2014. The

California Building Standards Code is contained in Title 24 of the California Code of Regulations, and consists of several parts that are based upon model codes with amendments made by various State agencies. The California Residential Code is Part 2.5 of Title 24 of the California Code of Regulations.

Local jurisdictions are required to enforce the California Residential Code. Local jurisdictions may also enact more stringent requirements than those contained in the State Code where more stringent requirements are reasonably necessary because of local conditions caused by climate, geology, or topography. The local amendments are not effective until findings supporting any amendments, additions, or deletions to the State Code are adopted and sent to the State Building Standards Commission.

n:\legana\as2013\1400074\00866371.doc

SAN FRANCISCO
PLANNING DEPARTMENT

1650 Mission St.
Suite 400
San Francisco,
CA 94103-2479

Reception:
415.558.6378

Fax:
415.558.6409

Planning
Information:
415.558.6377

Certificate of Determination
Exemption from Environmental Review

Case No.:	**2013.1157E**
Project Title:	**2013 San Francisco Building Codes - Proposed Amendments**
Location:	Citywide
Project Sponsor:	Kirk Means, Building Inspector, Department of Building Inspection
Staff Contact:	Christopher Espiritu – (415) 575-9022 Christopher.Espiritu@sfgov.org

PROJECT DESCRIPTION:

The proposed project would include updates to the current San Francisco Building, Residential, Electrical, Plumbing, and Mechanical Codes and the adoption of local amendments to the 2013 California Building Standard Codes. Elements of the proposed 2013 San Francisco Building Code would reflect a similar structure to the previously-adopted 2010 San Francisco Building Code and would retain discrete code sections for Building, Residential, Electrical, Plumbing, and Mechanical. An addition of a new individual section for the San Francisco Green Building Code, which was formerly Section 13C of the 2010 San Francisco Building Code, would be added to the proposed 2013 San Francisco Building Code. The California Green Building Code is part 11 of Title 24 of the California Code of Regulations and will go into effect throughout California at the same time as the 2013 California Building Standards Code, thus a Green Building Code section would be added to the proposed 2013 San Francisco Building Code.
(Continued on next page)

EXEMPT STATUS:

General Rule Exclusion [State Guidelines, Section 15061(b)(3)].

DETERMINATION:

I do hereby certify that the above determination has been made pursuant to State and Local requirements.

Victoria Wise for
Sarah Jones
Environmental Review Officer

October 16, 2013
Date

cc: Kirk Means, Building Inspector, DBI
Judy Boyajian, Deputy City Attorney
Virna Byrd, M.D.F.
Bulletin Board

PROJECT DESCRIPTION (continued):

The San Francisco Building Code regulates and controls the design, construction, quality of materials, use and occupancy, location, maintenance and demolition of all buildings and structures, quarrying, grading, excavation and filling of land, in the City and County of San Francisco. In addition, the Code provides safety to life and property from fire and other hazards attributed to the built environment and to provide safety to fire fighters and emergency responders during emergency operations. (The full text of proposed amendments is available for review at the Department of Building Inspection (DBI)).

The proposed project is subject to review and adoption by the San Francisco Board of Supervisors. Approval action for the proposed project is the adoption of the proposed project (ordinance) by the Board of Supervisors. Following introduction of the proposed ordinance to the Board of Supervisors, a 30-day review and comment period would be required prior to a Land Use Committee hearing on the proposed changes to the Code. When approved, the Land Use Committee will send the proposed ordinance to the full Board. The Board of Supervisors will review and approve the proposed project (ordinance) and upon approval by the Board of Supervisors, the proposed ordinance will be forwarded to the Mayor for signature. Following mayoral signature of the proposed ordinance, there is a 30-day waiting period before the approved ordinances can become effective.

REMARKS:

Every three years, the State of California adopts new California Building Code Standards, which go into effect throughout the State within 180 days after publication. The 2013 California Building Code will go into effect throughout California on January 1, 2014. The City and County of San Francisco is required, by State law, to enforce the California Building, Electrical, Plumbing, Mechanical, Housing, and Fire Codes.

Additional discretionary actions for local jurisdictions include the ability to enact more stringent standards, or local amendments, to the California Building Code Standards. Local amendments proposed for adoption by the City of San Francisco primarily deal with administrative, procedural, informational, and non-physical aspects of the various Code sections. To the extent that the local amendments relate to physical building conditions, they are intended to improve building safety and regulate building features such as wood decks, balconies, earthquake recording instruments, and sidewalks. The physical effects of such modifications are related to building design features which are very minor, localized in terms of visibility and impact, and intended to improve building safety. In addition, these local amendments provide guidance on specific conditions that are unique to the City of San Francisco such as topography, geology, and climate.

CEQA Guidelines Section 15061(b)(3) provides an exemption from environmental review where it can be seen with certainty that the proposed project would not have a significant effect on the environment. Since the proposed code amendments would have no significant environmental effects, it is appropriately

exempt from environmental review under the General Rule Exclusion (CEQA Guidelines Section 15061(b)(3)).

CEQA State Guidelines Section 15300.2 states that a categorical exemption shall not be used for an activity where there is a reasonable possibility that the activity will have a significant effect on the environment due to unusual circumstances. There are no unusual circumstances surrounding the current proposal that would suggest a reasonable possibility of a significant environmental effect. The proposed would have no significant environmental effects. The project would be exempt under the above-cited classification. For the above reasons, the proposed project is appropriately exempt from environmental review.

BUILDING INSPECTION COMMISSION (BIC)

Department of Building Inspection **Voice (415) 558-6164 - Fax (415) 558-6509**
1660 Mission Street, San Francisco, California 94103-2414

August 22, 2013

Edwin M. Lee
Mayor

COMMISSION

Angus McCarthy
President

Warren Mar
Vice-President

Kevin Clinch
Frank Lee
Dr. James McCray, Jr.
Myrna Melgar
Debra Walker

Sonya Harris
Secretary

Tom Hui
Acting Director

Ms. Angela Calvillo
Clerk of the Board
Board of Supervisors, City Hall
1 Dr. Carlton B. Goodlett Place, Room 244
San Francisco, CA 94102-4694

RE: Code amendments to the 2013 California Building, Mechanical, Electrical, Plumbing, Residential & Green Building Codes and recommend approval to the Board of Supervisors.

Dear Ms. Calvillo:

On August 22, 2013 the Building Inspection Commission held a public hearing on the proposed Code amendments referenced above.

The Commission voted unanimously (6-0) to recommend that the Board of Supervisors approve the amendments.

The Commissioners voted as follows:

President McCarthy	Aye	Vice-President Mar	Aye
Commissioner Clinch	Aye	Commissioner Lee	Aye
Commissioner McCray, Jr.	Aye	Commissioner Melgar	Aye
Commissioner Walker, excused			

Enclosed please find the Code Advisory Committee's recommendation to the BIC. Under separate cover, copies of the proposed amendments will follow from the Technical Services Division of the Department of Building Inspection.

Should you have any questions, please do not hesitate to call me at 558-6164.

Sincerely,

Sonya Harris
Commission Secretary

cc: Tom Hui, S.E., Acting Director
Mayor Edwin M. Lee
Supervisor David Chiu
Supervisor Scott Wiener
Supervisor Norman Yee
Supervisor Mark Farrell
Supervisor London Breed
Supervisor Eric Mar
Supervisor Malia Cohen
Deputy City Attorney John Malamut

City and County of San Francisco
Department of Building Inspection

Edwin M. Lee, Mayor
Tom C. Hui, S.E., C.B.O., Acting Director

August 16, 2013

Building Inspection Commission
1660 Mission Street
San Francisco, CA 94103

RE: Proposed 2013 amendments to the California Building Standards Code, CCR Title 24

Honorable Members of the Commission:

At the regular meeting of August 14, 2013, the full Code Advisory Committee (CAC) deliberated on and unanimously voted to approve, and transmit to the Building Inspection Commission, all of the 2013 San Francisco amendments to the 2013 California Title 24 building standards codes. This Committee has labored long and arduous hours over the past five months and feels that the work product before you represents the basis for a continuing safe and healthy building environment in San Francisco.

The San Francisco building standards codes approved and recommended by this Committee are:

1. 2013 San Francisco Building Code
   (which includes the amendments to the California Building and Residential Codes)
2. 2013 San Francisco Mechanical Code
3. 2013 San Francisco Electrical Code
4. 2013 San Francisco Plumbing Code
5. 2013 San Francisco Green Building Code

These documents are transmitted to you for your further action and a final approval to send them on to the Board of Supervisors. If you have any questions, please call me at (415) 575-6832.

Respectfully submitted,

Kirk Means
DBI Technical Services Division
Secretary to the Code Advisory Committee

cc: Tom C. Hui, S.E., C.B.O., Acting Director
Edward Sweeney, Acting Deputy Director
David Leung, Manager, Permit Submittal and Issuance
Ned Fennie, Jr., Chair, Code Advisory Committee
Bill Strawn, Communications Manager

City and County of San Francisco
Department of Building Inspection

Edwin M. Lee, Mayor
Tom C. Hui, S.E., C.B.O., Acting Director

August 29, 2013

RECEIVED
BOARD OF SUPERVISORS
SAN FRANCISCO
2013 AUG 29 PM 3:30
BY: AK

Angela Calvillo, Clerk of the Board
Board of Supervisors
#1 Dr. Carlton B. Goodlett Place, Room 244
San Francisco, CA 94102-4689

Dear Ms. Calvillo:

Attached please find an original and two electronic (CD's) copies of six proposed ordinances (approved by the Building Inspection Commission on August 21, 2013) for the Board of Supervisors approval, which repeal the San Francisco amendments to the 2010 California Building Standards codes and adopt replacement amendments to the new 2013 California Building Standards Codes effective January 1, 2014. (Two copies of these 2013 California Building Standards Codes are hereby provided for your reference in the form of each California adopted model code and their associated California amendments to them.)

The following is a list of accompanying documents (three sets):

1) Environmental Findings (to follow)
2) Exhibit A
3) San Francisco Building Code Ordinance, Legislative Digest, Findings, proposed amendment text (Building)
4) San Francisco Building Code; Residential Building Requirements Ordinance, Legislative Digest, Findings, proposed amendment text. (Residential)
5) San Francisco Electrical Code Ordinance, Legislative Digest, Findings, proposed amendment text (Electrical)
6) San Francisco Mechanical Code Ordinance, Legislative Digest, Findings, proposed amendment text (Mechanical)
7) San Francisco Plumbing Code Ordinance, Legislative Digest, Findings, proposed amendment text (Plumbing)
8) San Francisco Green Building Code Ordinance, Legislative Digest, Findings, proposed amendment text (Green)

In order for the San Francisco code amendments to coordinate with the California codes, which have an effective date of January 1, 2014, the timeline for approval and adoption requires that the codes be submitted to the Board of Supervisors on or before August 30, 2013 for introduction and assignment to the Land Use Committee (on September 10, 2013), a thirty day review and comment period follows prior to hearing at the Land Use Committee on October 21, 2013. When approved, it is proposed that the Board of Supervisors agendize

1660 Mission Street – San Francisco CA 94103
Office (415) 558-6088 – FAX (415) 558-6401
Website: www.sfdbi.org

Readings on October 29, 2013 and November 5, 2013. Upon their approval, the ordinances will be forwarded to the Mayor for signature within 10 days, followed by a 30 day wait period (ending approximately December 15, 2013) before filing with the California Building Standards Commission to become effective for an implementation date of January 1, 2014.

The following person may be contacted regarding this matter:

Kirk Means, Building Inspector
Technical Services Division
Department of Building Inspection
Phone: (415) 575-6832
Fax: (415) 558-6401

Attachments: As stated

2013
San Francisco Residential Code

Amendments to the

2013 California Residential Code

Operative date: January 1, 2014

The 2013 California Residential Code (CRC) as amended by the City & County of San Francisco is herein printed as Chapter 36 of the San Francisco Building Code which serves as a directory of where such provisions may be found in the other chapters of the San Francisco Building Code. Provisions of the California Residential Code have been relocated as amendments to the 2013 California Building Code under the specific applicable sections and are noted and referenced to the CRC.

BOARD of SUPERVISORS

City Hall
Dr. Carlton B. Goodlett Place, Room 244
San Francisco 94102-4689
Tel. No. 554-5184
Fax No. 554-5163
TDD/TTY No. 554-5227

September 16, 2013

File Nos. 130836-130841

Sarah Jones
Environmental Review Officer
Planning Department
1650 Mission Street, 4th Floor
San Francisco, CA 94103

Dear Ms. Jones:

On September 10, 2013, the Building Inspection Commission introduced the following proposed legislation:

130836 **Building Code - Repeal of Existing 2010 Code and Enactment of 2013 Edition**

Ordinance repealing the 2010 Building Code in its entirety and enacting a 2013 Building Code consisting of the new model code, as amended by the State of California and as further amended by San Francisco; adopting environmental findings and findings of local conditions under the California Health and Safety Code; providing for an operative date of January 1, 2014; and directing the Clerk of the Board to forward the legislation to the State Building Standards Commission as required by State law.

130837 **Building Code - Residential Building Requirements**

Ordinance incorporating the provisions of the 2013 California Residential Code into various chapters of the Building Code with local amendments, and adding Chapter 36 to serve as a directory of where such provisions may be found in the Building Code; adopting environmental findings and findings of local conditions under the California Health and Safety Code; providing for an operative date of January 1, 2014; and directing the Clerk of the Board to forward the legislation to the State Building Standards Commission as required by State law.

130838 **Electrical Code - Repeal of Existing 2010 Code and Enactment of 2013 Edition**

Ordinance repealing the 2010 Electrical Code in its entirety and enacting a 2013 Electrical Code consisting of the new model code, as amended by the State of California and as further amended by San Francisco; adopting environmental findings and findings of local conditions under the California Health and Safety Code; providing for an operative date of January 1, 2014; and directing the Clerk of the Board to forward the legislation to the State Building Standards Commission as required by State law.

130839 **Mechanical Code - Repeal of Existing 2010 Code and Enactment of 2013 Edition**

Ordinance repealing the 2010 Mechanical Code in its entirety and enacting a 2013 Mechanical Code consisting of the new model code, as amended by the State of California and as further amended by San Francisco; adopting environmental findings and findings of local conditions under the California Health and Safety Code; providing for an operative date of January 1, 2014; and directing the Clerk of the Board to forward the legislation to the State Building Standards Commission as required by State law.

130840 **Plumbing Code - Repeal of Existing 2010 Code and Enactment of 2013 Edition**

Ordinance repealing the 2010 Plumbing Code in its entirety and enacting a 2013 Plumbing Code consisting of the new model code, as amended by the State of California and as further amended by San Francisco; adopting environmental findings and findings of local conditions under the California Health and Safety Code; providing for an operative date of January 1, 2014; and directing the Clerk of the Board to forward the legislation to the State Building Standards Commission as required by State law.

130841 **Green Building Code - Enactment of New Code**

Ordinance enacting a 2013 San Francisco Green Building Code consisting of the 2013 California Green Building Standards Code, as amended by San Francisco; adopting environmental findings and findings required by the California Health and Safety Code, California Public Resources Code, and Title 24 of the California Code of Regulations; providing for an operative date of January 1, 2014; and directing the Clerk of the Board to forward the legislation to the State Building Standards Commission as required by State law.

This legislation is being transmitted to you for environmental review.

Angela Calvillo, Clerk of the Board

By: Alisa Miller, Committee Clerk
Land Use & Economic Development Committee

Attachment

c: Monica Pereira, Environmental Planning
Joy Navarrete, Environmental Planning

2013 CALIFORNIA RESIDENTIAL CODE

California Code of Regulations
Title 24, Part 2.5

Based on the 2012 International Residential Code®

California Building Standards Commission





3665

Effective Date: January 1, 2014

2013 California Residential Code
California Code of Regulations, Title 24, Part 2.5

First Printing: July 2013

ISBN: 978-1-60983-458-6

Copyright © 2013
Held by

California Building Standards Commission
2525 Natomas Park Drive, Suite 130
Sacramento, CA 95833-2936

ALL RIGHTS RESERVED. This 2013 *California Residential Code* contains substantial copyrighted material from the 2012 *International Residential Code*, which is a copyrighted work owned by the International Code Council, Inc. Without advance written permission from the copyright owner, no part of this book may be reproduced, distributed or transmitted in any form or by any means, including, without limitation, electronic, optical or mechanical means (by way of example and not limitation, photocopying, or recording by or in an information storage retrieval system). For information on permission to copy material exceeding fair use, please contact: Publications, 4051 West Flossmoor Road, Country Club Hills, IL 60478. Phone 1-888-ICC-SAFE (422-7233).

Trademarks: "International Code Council," the "International Code Council" logo and the "International Residential Code" are trademarks of the International Code Council, Inc.

PRINTED IN THE U.S.A.

3666

PREFACE

This document is Part 2.5 of 12 parts of the official triennial compilation and publication of the adoptions, amendments and repeal of administrative regulations to the *California Code of Regulations, Title 24,* also referred to as the *California Building Standards Code*. This part is known as the *California Residential Code*.

The *California Building Standards Code* is published in its entirety every three years by order of the California legislature, with supplements published in intervening years. The California legislature delegated authority to various state agencies, boards, commissions and departments to create building regulations to implement the State's statutes. These building regulations, or standards, have the same force of law, and take effect 180 days after their publication unless otherwise stipulated. The *California Building Standards Code* applies to occupancies in the State of California as annotated.

A city, county, or city and county may establish more restrictive building standards reasonably necessary because of local climatic, geological or topographical conditions. Findings of the local condition(s) and the adopted local building standard(s) must be filed with the California Building Standards Commission to become effective and may not be effective sooner than the effective date of this edition of the *California Building Standards Code*. Local building standards that were adopted and applicable to previous editions of the *California Building Standards Code* do not apply to this edition without appropriate adoption and the required filing.

Should you find publication (e.g., typographical) errors or inconsistencies in this code or wish to offer comments toward improving its format, please address your comments to:

California Building Standards Commission
2525 Natomas Park Drive, Suite 130
Sacramento, CA 95833–2936

Phone: (916) 263–0916
Fax: (916) 263–0959

Web Page: www.bsc.ca.gov

ACKNOWLEDGEMENTS

The 2013 *California Building Standards Code* (Code) was developed through the outstanding collaborative efforts of the Department of Housing and Community Development, the Division of State Architect, the Office of the State Fire Marshal, the Office of Statewide Health Planning and Development, the California Energy Commission, the California Department of Public Health, the California State Lands Commission, the Board of State and Community Corrections, and the California Building Standards Commission (Commission).

This collaborative effort included the assistance of the Commission's Code Advisory Committees and many other volunteers who worked tirelessly to assist the Commission in the production of this Code.

Governor Edmund G. Brown Jr.

Members of the California Building Standards Commission

Secretary Anna Caballaro – Chair
James Barthman – Vice-Chair

Stephen Jensen	*Rose Conroy*
Randy Twist	*Sheila Lee*
Richard Sawhill	*Richard Sierra*
Kent Sasaki	*Steven Winkel*

Erick Mikiten

Jim McGowan – Executive Director
Michael L. Nearman – Deputy Executive Director

For questions on California state agency amendments, please refer to the contact list on the following page.

CALIFORNIA CODE OF REGULATIONS, TITLE 24

California Agency Information Contact List

Board of State and Community Corrections

www.bscc.ca.gov .....(916) 445-5073
Local Adult Jail Standards
Local Juvenile Facility Standards

California Building Standards Commission

www.bsc.ca.gov .....(916) 263-0916

California Energy Commission

www.enregy.ca.gov ..... ***Energy Hotline*** *(800) 772-3300*
Building Efficiency Standards
Appliance Efficiency Standards
Compliance Manual/Forms

California State Lands Commission

www.slc.ca.gov .....(562) 499-6312
Marine Oil Terminals

California State Library

www.library.ca.gov .....(916) 654-0266

Department of Consumer Affairs:

Acupuncture Board
www.acupuncture.ca.gov .....(916) 515-5200
Office Standards

Board of Pharmacy
www.pharmacy.ca.gov .....(916) 574-7900
Pharmacy Standards

Bureau of Barbering and Cosmetology
www.barbercosmo.ca.gov .....(916) 952-5210
Barber and Beauty Shop,
and College Standards

Bureau of Electronic and Appliance Repair,
Home Furnishings and Thermal Insulation
www.bearhfti.ca.gov.....(916) 999-2041
Insulation Testing Standards

Structural Pest Control Board
www.pestboard.ca.gov .....(800) 737-8188
Structural Standards

Veterinary Medical Board
www.vmb.ca.gov.....(916) 263-2610
Veterinary Hospital Standards

Department of Food and Agriculture

www.cdfa.ca.gov
Meat & Poultry Packing Plant Standards (916) 654-0509
Dairy Standards (916) 654-0773

Department of Housing and Community Development

www.hcd.ca.gov.....(916) 445-9471
Residential- Hotels, Motels, Apartments,
Single-Family Dwellings; and
Permanent Structures in Mobilehome &
Special Occupancy Parks

(916) 445-3338
Factory-Built Housing, Manufactured Housing &
Commercial Modular

Mobilehome- Permits & Inspections
Northern Region–(916) 255-2501
Southern Region–(951) 782-4420

(916) 445-9471
Employee Housing Standards

Department of Public Health

www.dph.ca.gov.....(916) 449-5661
Organized Camps Standards
Public Swimming Pools Standards

Division of the State Architect

www.dgs.ca.gov/dsa.....(916) 445-8100

Access Compliance

Structural Safety
Public Schools Standards
Essential Services Building Standards
Community College Standards

State Historical Building Safety Board
Alternative Building Standards

Office of Statewide Health Planning and Development

www.oshpd.ca.gov.....(916) 440-8356
Hospital Standards
Skilled Nursing Facility Standards &
Clinic Standards
Permits

Office of the State Fire Marshal

osfm.fire.ca.gov .....(916) 445-8200
Code Development and Analysis
Fire Safety Standards

HOW TO DETERMINE WHERE CHANGES HAVE BEEN MADE

Symbols in the margins indicate where changes have been made or language has been deleted.

‖ This symbol indicates that a change has been made.

> This symbol indicates California deletion of model code or California language.

| This symbol indicated that a change has been made to International Code Council model code language.

➡ The symbol indicates deletion of International Code Council model code language.

How to Distinguish Between Model Code Language and California Amendments

To distinguish between model code language and the incorporated California amendments, including exclusive California standards, California amendments will appear in italics.

[SFM] This is an example of a state agency acronym used to identify an adoption or amendment by the agency. The acronym will appear at California Amendments and in the Matrix Adoption Tables. Section 1.11 of Chapter 1, Division 1, of this code explains the application of State Fire Marshal adoptions to building occupancies or building features, the enforcement agency as designated by state law (may be the state adopting agency or local building or fire official), the authority in state law for the state agency to make the adoption, and the specific state law being implemented by the adoption. Only the Office of the State Fire Marshal makes adoptions in this code.

Legend of Acronyms of Adopting State Agencies

BSC	*California Building Standards Commission (see Section 1.2)*
BSCC	*Board of State and Community Corrections (see Section 1.3)*
SFM	*Office of the State Fire Marshal (see Section 1.11)*
HCD 1	*Department of Housing and Community Development (see Section 1.8.2.1.1)*
HCD 2	*Department of Housing and Community Development (see Section 1.8.2.1.3)*
HCD 1/AC	*Department of Housing and Community Development (see Section 1.8.2.1.2)*
DSA-AC	*Division of the State Architect-Access Compliance*
DSA-SS	*Division of the State Architect-Structural Safety*
DSA-SS/CC	*Division of the State Architect-Structural Safety/Community Colleges*
OSHPD 1	*Office of Statewide Health Planning and Development*
OSHPD 2	*Office of Statewide Health Planning and Development*
OSHPD 3	*Office of Statewide Health Planning and Development*
OSHPD 4	*Office of Statewide Health Planning and Development*
CSA	*Corrections Standards Authority*
DPH	*Department of Public Health*
AGR	*Department of Food and Agriculture*
CEC	*California Energy Commission*
CA	*Department of Consumer Affairs:* *Board of Barbering and Cosmetology* *Board of Examiners in Veterinary Medicine* *Board of Pharmacy* *Acupuncture Board* *Bureau of Home Furnishings* *Structural Pest Control Board*
SL	*State Librarian*
SLC	*State Lands Commission*
DWR	*Department of Water Resources*

The state agencies are available to answer questions about their adoptions. Contact information is provided on page iv of this code.

To learn more about the use of this code refer to pages xvii and xviii. Training materials on the application and use of this code are available at the website of the California Building Standards Commission www.bsc.ca.gov.

California Matrix Adoption Tables

Format of the California Matrix Adoption Tables

The matrix adoption tables, examples of which follow, are non-regulatory aids intended to show the user which state agencies have adopted and/or amended given sections of the model code. An agency's statutory authority for certain occupancies or building applications determines which chapter or section may be adopted, repealed, amended or added. See Chapter 1, Division I, Sections 1.2 through 1.14 for agency authority, building applications and enforcement responsibilities.

The side headings identify the scope of state agencies' adoption as follows:

Adopt the entire IRC chapter without state amendments.

If there is an "X" under a particular state agency's acronym on this row; this means that particular state agency has adopted the entire model code chapter without any state amendments.

Example:

CALIFORNIA BUILDING CODE-MATRIX ADOPTION TABLE

(Matrix Adoption Tables are non-regulatory, intended only as an aid to the user. See Chapter 1 for state agency authority and building application.)

CHAPTER 2 – DEFINITIONS AND ABBREVIATIONS

Adopting agency	BSC	SFM	HCD			DSA			OSHPD				BSCC	DPH	AGR	DWR	CA	SL	SLC
			1	2	1-AC	AC	SS	SS/CC	1	2	3	4							
Adopt entire chapter		X																	
Adopt entire chapter as amended (amended sections listed below)						S	A	M	P	L	E								
Adopt only those sections that are listed below																			
Chapter/Section																			

Adopt the entire IRC chapter as amended, state-amended sections are listed below:

If there is an "X" under a particular state agency's acronym on this row, it means that particular state agency has adopted the entire model code chapter; with state amendments.

Each state-amended section that the agency has added to that particular chapter is listed. There will be an "X" in the column, by that particular section, under the agency's acronym, as well as an "X" by each section that the agency has adopted.

Example:

CHAPTER 2 – DEFINITIONS AND ABBREVIATIONS

Adopting agency	BSC	SFM	HCD			DSA			OSHPD				BSCC	DPH	AGR	DWR	CA	SL	SLC
			1	2	1-AC	AC	SS	SS/CC	1	2	3	4							
Adopt entire chapter																			
Adopt entire chapter as amended (amended sections listed below)		X																	
Adopt only those sections that are listed below						S	A	M	P	L	E								
Chapter/Section																			
202		X																	

Adopt only those sections that are listed below:

If there is an "X" under a particular state agency's acronym on this row, it means that particular state agency is adopting only specific model code or state-amended sections within this chapter. There will be an "X" in the column under the agency's acronym, as well as an "X" by each section that the agency has adopted.

Example:

CHAPTER 2 – DEFINITIONS AND ABBREVIATIONS

Adopting agency	BSC	SFM	HCD			DSA			OSHPD				BSCC	DPH	AGR	DWR	CA	SL	SLC
			1	2	1-AC	AC	SS	SS/CC	1	2	3	4							
Adopt entire chapter																			
Adopt entire chapter as amended (amended sections listed below)																			
Adopt only those sections that are listed below				X	X		S	A	M	P	L	E							
Chapter 1																			
202				X	X		S	A	M	P	L	E							
202				X	X			C	O	N	T.								
203				X	X														
203				X	X														

TABLE OF CONTENTS

Part I—Administrative 3

CHAPTER 1 SCOPE AND APPLICATION 3

DIVISION I—CALIFORNIA ADMINISTRATION 3

Section

1.1 General 3
1.2 Reserved 6
1.3 Reserved 6
1.4 Reserved 6
1.5 Reserved 6
1.6 Reserved 6
1.7 Reserved 6
1.8 Department of Housing and Community Development (HCD) 6
1.8.1 Purpose 6
1.8.2 Authority and Abbreviations 6
1.8.3 Local Enforcing Agency 7
1.8.4 Permits, Fees, Applications and Inspections 8
1.8.5 Right of Entry for Enforcement 8
1.8.6 Local Modification by Ordinance or Regulation 9
1.8.7 Alternate Materials, Designs, Tests and Methods of Construction 9
1.8.8 Appeals Board 10
1.8.9 Unsafe Buildings or Structures 10
1.8.10 Other Building Regulations 11
1.9 Reserved 11
1.10 Reserved 11
1.11 Office of the State Fire Marshal 11
1.12 Reserved 15
1.13 Reserved 15
1.14 Reserved 15

DIVISION II—ADMINISTRATION 16

Section

R101 General 16
R102 Applicability 16
R103 Department of Building Safety 17
R104 Duties and Powers of the Building Official 17
R105 Permits 18
R106 Construction Documents 20
R107 Temporary Structures and Uses 21
R108 Fees 21
R109 Inspections 21
R110 Certificate of Occupancy 22
R111 Service Utilities 23
R112 Board of Appeals 23
R113 Violations 24
R114 Stop Work Order 24

Part II—Definitions 29

CHAPTER 2 DEFINITIONS 29

Section

R201 General 29
R202 Definitions 29

Part III—Building Planning and Construction 41

CHAPTER 3 BUILDING PLANNING 41

Section

R300 Site Drainage 41
R301 Design Criteria 41
R302 Fire-Resistant Construction 64
R303 Light, Ventilation and Heating 70
R304 Minimum Room Areas 71
R305 Ceiling Height 72
R306 Sanitation 72
R307 Toilet, Bath and Shower Spaces 72
R308 Glazing 72
R309 Garages and Carports 75
R310 Emergency Escape and Rescue Openings 75
R311 Means of Egress 76
R312 Guards and Window Fall Protection 79
R313 Automatic Fire Sprinkler Systems 80
R314 Smoke Alarms 92
R315 Carbon Monoxide Alarms 96
R316 Foam Plastic 97
R317 Protection of Wood and Wood Based Products Against Decay 99
R318 Protection Against Subterranean Termites 101
R319 Site Address 101
R320 Accessibility 101

R321 Elevators and Platform Lifts. 101
R322 Flood-Resistant Construction. 101
R323 Storm Shelters 104
R324 Construction Waste Reduction, Disposal and Recycling 104
R325 Special Provisions for Licensed 24-hour Care Facilities in a Group R-3.1. . . . 105
R326 Large Family Day-Care Homes 108
R327 Materials and Construction Methods for Exterior Wildfire Exposure. 109
R328 Electric Vehicle 116
R329
R330 Pollutant Control 116
R331 Solar Photovoltaic Panels/Modules 116

CHAPTER 4 FOUNDATIONS 119
Section
R401 General 119
R402 Materials. 120
R403 Footings 121
R404 Foundation and Retaining Walls 137
R405 Foundation Drainage 155
R406 Foundation Waterproofing and Dampproofing. 156
R407 Columns 157
R408 Under-Floor Space 157

CHAPTER 5 FLOORS. 159
Section
R501 General 159
R502 Wood Floor Framing 159
R503 Floor Sheathing 168
R504 Pressure Preservatively Treated-Wood Floors (On Ground) 168
R505 Steel Floor Framing 173
R506 Concrete Floors (On Ground). 191
R507 Decks 193

CHAPTER 6 WALL CONSTRUCTION 197
Section
R601 General 197
R602 Wood Wall Framing. 197
R603 Steel Wall Framing. 240
R604 Wood Structural Panels 313
R605 Particleboard. 313
R606 General Masonry Construction. 313
R607 Unit Masonry 322
R608 Multiple-wythe Masonry 323
R609 Grouted Masonry 324
R610 Glass Unit Masonry 325
R611 Exterior Concrete Wall Construction. 327
R612 Exterior Windows and Doors. 396
R613 Structural Insulated Panel Wall Construction. 399

CHAPTER 7 WALL COVERING 409
Section
R701 General. 409
R702 Interior Covering 409
R703 Exterior Covering. 413

CHAPTER 8 ROOF-CEILING CONSTRUCTION 427
Section
R801 General. 427
R802 Wood Roof Framing 427
R803 Roof Sheathing. 454
R804 Steel Roof Framing 454
R805 Ceiling Finishes 487
R806 Roof Ventilation. 487
R807 Attic Access 488

CHAPTER 9 ROOF ASSEMBLIES 489
Section
R901 General. 489
R902 Roof Classification. 489
R903 Weather Protection. 490
R904 Materials. 490
R905 Requirements for Roof Coverings 491
R906 Roof Insulation. 500
R907 Reroofing 501
R908 Solar Photovoltaic Panels/Modules 501

CHAPTER 10 CHIMNEYS AND FIREPLACES. . . 503
Section
R1001 Masonry Fireplaces 503
R1002 Masonry Heaters 507
R1003 Masonry Chimneys 507
R1004 Factory-Built Fireplaces. 511
R1005 Factory-Built Chimneys. 511
R1006 Exterior Air Supply 512

Part IV—Energy Conservation 513

Part V—Mechanical 515

Part VI—Fuel Gas 517

Part VII—Plumbing 519

Part VIII—Electrical 521

Part IX—Referenced Standards 525

CHAPTER 44 REFERENCED STANDARDS 525

APPENDIX A SIZING AND CAPACITIES OF GAS PIPING 555

APPENDIX B SIZING OF VENTING SYSTEMS SERVING APPLIANCES EQUIPPED WITH DRAFT HOODS, CATEGORY I APPLIANCES, AND APPLIANCES LISTED FOR USE WITH TYPE B VENTS 567

APPENDIX C EXIT TERMINALS OF MECHANICAL DRAFT AND DIRECT-VENT VENTING SYSTEMS 577

APPENDIX D RECOMMENDED PROCEDURE FOR SAFETY INSPECTION OF AN EXISTING APPLIANCE INSTALLATION 579

APPENDIX E MANUFACTURED HOUSING USED AS DWELLINGS 581

Section

AE101 Scope 581

AE102 Application to Existing Manufactured Homes and Building Service Equipment 581

AE201 Definitions 582

AE301 Permits 583

AE302 Application for Permit 583

AE303 Permits Issuance 583

AE304 Fees 584

AE305 Inspections 585

AE306 Special Inspections 586

AE307 Utility Service 586

AE401 Occupancy Classification 586

AE402 Location on Property 586

AE501 Design 586

AE502 Foundation Systems 586

AE503 Skirting and Perimeter Enclosures 587

AE504 Structural Additions 587

AE505 Building Service Equipment 587

AE506 Exits 587

AE507 Occupancy, Fire Safety and Energy Conservation Standards 587

AE600 Special Requirements for Foundation Systems 587

AE601 Footings and Foundations 587

AE602 Pier Construction 587

AE603 Height of Piers 588

AE604 Anchorage Installations 588

AE605 Ties, Materials and Installation 589

AE606 Referenced Standards 589

APPENDIX F RADON CONTROL METHODS 591

Section

AF101 Scope 591

AF102 Definitions 591

AF103 Requirements 591

APPENDIX G SWIMMING POOLS, SPAS AND HOT TUBS 599

Section

AG100 Swimming Pool Safety Act 599

AG101 General 601

AG102 Definitions 602

AG103 Swimming Pools 602

AG104 Spas and Hot Tubs 602

AG105 Barrier Requirements 602

AG106 Entrapment Protection for Swimming Pool and Spa Suction Outlets 603

AG107 Abbreviations 603

AG108 Referenced Standards 603

APPENDIX H PATIO COVERS 605

Section

AH101 General 605

AH102 Definition 605

AH103 Exterior Walls and Openings 605

AH104 Height 605
AH105 Structural Provisions 605
AH106 Special Provisions for Aluminum Screen Enclosures in Hurricane-Prone Regions. 606

APPENDIX I PRIVATE SEWAGE DISPOSAL . . . 609
Section
AI101 General 609

APPENDIX J EXISTING BUILDINGS AND STRUCTURES 611
Section
AJ101 Purpose and Intent 611
AJ102 Compliance. 611
AJ103 Preliminary Meeting. 612
AJ104 Evaluation of an Existing Building 612
AJ105 Permit 612
AJ201 Definitions 612
AJ301 Repairs 613
AJ401 Renovations 613
AJ501 Alterations 613
AJ601 Reconstruction 614

APPENDIX K SOUND TRANSMISSION 615
Section
AK101 General 615
AK102 Air-borne Sound. 615
AK103 Structural-Borne Sound 615
AK104 Referenced Standards. 615

APPENDIX L PERMIT FEES 617

APPENDIX M HOME DAY CARE—R-3 OCCUPANCY 619

APPENDIX N VENTING METHODS. 621

APPENDIX O AUTOMATIC VEHICULAR GATES 627
Section
AO101 General 627
AO102 Definition 627
AO103 Automatic Vehicular Gates 627

APPENDIX P SIZING OF WATER PIPING SYSTEM. 629
Section
AP101 General. 629
AP102 Information Required. 629
AP103 Selection of Pipe Size 629
AP201 Selection of Pipe Size 646

APPENDIX Q ICC *INTERNATIONAL RESIDENTIAL CODE* ELECTRICAL PROVISIONS/*NATIONAL ELECTRICAL CODE* CROSS REFERENCE 649

HISTORY NOTE. 665

INDEX. 667

CALIFORNIA RESIDENTIAL CODE – MATRIX ADOPTION TABLE
CHAPTER 1 – SCOPE AND APPLICATION

(Matrix Adoption Tables are non-regulatory, intended only as an aid to the user.
See Chapter 1 for state agency authority and building applications.)

Adopting agency	BSC	SFM	HCD			DSA		OSHPD				BSCC	DHS	AGR	DWR	CEC	CA	SL	SLC
			1	2	1/AC	AC	SS	1	2	3	4								
Adopt entire chapter																			
Adopt entire chapter as amended (amended sections listed below)		X																	
Adopt only those sections that are listed below			X																
Chapter / Section																			
Division I																			
1.1 though 1.1.12		X	X																
1.8 though 1.8.10.2			X																
1.11 though 1.11.10		X																	
Division II																			
R104.2 - R104.4		X																	
R104.9 - R104.9.1		X																	
R105.1		X																	
R105.2 Building: Items 1 - 10			X																
Electrical:			†																
Gas:			†																
Mechanical:			†																
R105.2.1 - R105.2.2		X																	
R105.3 - R105.3.1		X																	
R105.4		X																	
R105.6		X																	
R105.7		X																	
R106.1			X																
R106.1.1			X																
R106.1.3			X																
R106.2			X																
R107 - R107.4		X																	
R109.1		X	X																
R109.1.1			X																
R109.1.1.1			X																
R109.1.2			†																
R109.1.3			X																
R109.1.4		X	X																
R109.1.4.1			X																
R109.1.4.2			X																
R109.1.5		X	X																
R109.1.5.1		X	X																
R109.1.5.2			X																
R109.1.6		X	X																
R109.1.6.1			X																
R109.1.6.2			X																
R109.2 - R109.4		X																	
R110.1 - R110.5		X																	
R111.1 - R111.3		X																	
R113.1 - R113.2		X																	
R114.1 - R114.2		X																	

The state agency does not adopt sections identified with the following symbol: †

Part I—Administrative

CHAPTER 1
SCOPE AND APPLICATION

DIVISION I
CALIFORNIA ADMINISTRATION

SECTION 1.1
GENERAL

1.1.1 ***Title.*** *These regulations shall be known as the California Residential Code, may be cited as such and will be referred to herein as "this code." The California Residential Code is Part 2.5 of twelve parts of the official compilation and publication of the adoption, amendment and repeal of building regulations to the California Code of Regulations, Title 24, also referred to as the California Building Standards Code. This part incorporates by adoption the 2012 International Residential Code of the International Code Council with necessary California amendments.*

1.1.2 ***Purpose.*** *The purpose of this code is to establish the minimum requirements to safeguard the public health, safety and general welfare through structural strength, means of egress facilities, stability, access to persons with disabilities, sanitation, adequate lighting and ventilation, and energy conservation; safety to life and property from fire and other hazards attributed to the built environment; and to provide safety to fire fighters and emergency responders during emergency operations.*

1.1.3 ***Scope.*** *The provisions of this code shall apply to the construction, alteration, movement, enlargement, replacement, repair, equipment, use and occupancy, location, maintenance, removal and demolition of every detached one-and two-family dwelling, efficiency dwelling unit, and townhouse not more than three stories above grade plane in height with a separate means of egress and structures accessory thereto throughout the State of California.*

Exceptions:

1. *Live/work units complying with the requirements of Section 419 of the California Building Code shall be permitted to be built as one- and two-family dwellings or townhouses. Fire suppression required by Section 419.5 of the California Building Code when constructed under the California Residential Code for one- and two-family dwellings shall conform to Section 903.3.1.3 of the California Building Code.*
2. *Owner-occupied lodging houses with five or fewer guestrooms shall be permitted to be constructed in accordance with the California Residential Code for One- and Two-family Dwellings when equipped with a fire sprinkler system in accordance with Section R313.*

1.1.3.1 ***Classification.*** *Structures or portions of structures shall be classified with respect to occupancy in one or more of the groups listed below. A room or space that is intended to be occupied at different times for different purposes shall comply with all of the requirements that are applicable to each of the purposes for which the room or space will be occupied. Structures with multiple occupancies or uses shall comply with Section 508 of the California Building Code. Where a structure is proposed for a purpose that is not specifically provided for in this code, such structure shall be classified in the group that the occupancy most nearly resembles, according to the fire safety and relative hazard involved in accordance with this code or the California Building Code.*

1.1.3.1.1 ***Residential Group R.*** *Residential Group R includes, among others, the use of a building or structure, or a portion thereof, for sleeping purposes when not classified as an Institutional Group I. Residential occupancies shall include the following:*

R-3 Residential occupancies where the occupants are primarily permanent in nature and not classified as Group R-1, R-2, R-2.1, R-3.1, R-4 or I, including:

Buildings that do not contain more than two dwelling units.

Townhouses not more than three stories above grade in height with a separate means of egress.

Adult facilities that provide accommodations for six or fewer persons of any age for less than 24-hours. Licensing categories that may use this classification include, but are not limited to:

Adult Day Programs.

Child care facilities that provide accommodations for six or fewer persons of any age for less than 24-hours. Licensing categories that may use this classification include, but are not limited to:

Day-care Center for Mildly Ill Children, Infant Care Center and School Age Child Day-care Center.

Family Day-care Homes that provide accommodations for 14 or fewer children, in the provider's own home for less than 24-hours.

Congregate living facilities or congregate residences with 16 or fewer persons.

R-3.1 This occupancy group may include facilities licensed by a governmental agency for a residentially based 24-hour care facility providing accommodations for six or fewer clients of any age. Clients may be classified as ambulatory, nonambulatory or bedridden. A Group R-3.1 occupancy shall meet the requirements for construction as defined for Group R-3, except as otherwise provided for in Section R325 Special Provisions For Licensed 24-Hour Care Facilities in a Group R-3.1 Occupancy. This group may include:

Adult Residential Facilities Congregate Living Health Facilities
Foster Family Homes
Group Homes
Intermediate Care Facilities for the developmentally disabled habilitative
Intermediate Care Facilities for the developmentally disabled nursing
Nurseries for the full-time care of children under the age of six, but not including "infants" as defined in Section 202
Residential Care Facilities for the Elderly
Small Family Homes and Residential Care Facilities for the chronically ill

***Exception:** Foster Family Homes or Group Homes licensed by the Department of Social Services which provide nonmedical board, room and care for six or fewer ambulatory children or children two years of age or younger, and which do not have any nonambulatory clients shall not be subject to regulations found in Section R325.*

Pursuant to Health and Safety Code Section 13143 with respect to these exempted facilities, no city, county or public district shall adopt or enforce any requirement for the prevention of fire or for the protection of life and property against fire and panic unless the requirement would be applicable to a structure regardless of the special occupancy. Nothing shall restrict the application of state or local housing standards to such facilities if the standards are applicable to residential occupancies and are not based on the use of the structure as a facility for ambulatory children. For the purpose of this exception, ambulatory children does not include relatives of the licensee or the licensee's spouse.

Large Family Day-Care Homes. See Section R326.

***1.1.3.1.2 Utility and Miscellaneous Group U.** Buildings and structures of an accessory character and miscellaneous structures not classified in any specific occupancy shall be constructed, equipped and maintained to conform to the requirements of this code commensurate with the fire and life hazard incidental to their occupancy. Group U shall include, but not be limited to, the following:*

Agricultural buildings
Aircraft hangars, accessory to a one- or two-family residence (see Section 412.5 of the California Building Code)
Barns
Carports
Fences more than 6 feet (1829 mm) high
Grain silos, accessory to a residential occupancy
Greenhouses
Livestock shelters
Private garages
Retaining walls
Sheds
Stables
Tanks
Towers

***1.1.3.2 Regulated buildings, structures and applications.** The model code, state amendments to the model code, and/or state amendments where there are no relevant model code provisions shall apply to detached one- and two-family dwellings, townhouses and structures accessory thereto. State agencies with regulatory authority as specified in Sections 1.2 through 1.14, except where modified by local ordinance pursuant to Section 1.1.8. When adopted by a state agency, the provisions of this code shall be enforced by the appropriate enforcing agency, but only to the extent of authority granted to such agency by the state legislature.* <

***Note:** See Preface to distinguish the model code provisions from the California provisions.*

1. *One- and two-family dwellings, townhouses, employee housing, factory-built housing and other types of dwellings containing sleeping accommodations with common toilets or cooking facilities. See Section 1.8.1.1.1.* ||
2. *Permanent buildings and permanent accessory buildings or structures constructed within mobilehome parks and special occupancy parks regulated by the Department of Housing and Community Development. See Section 1.8.1.1.3.* ||
3. *Applications regulated by the Office of the State Fire Marshal include, but are not limited to, the following in accordance with Section 1.11:*

   3.1. Buildings or structures used or intended for use as a/an:

   1. *Home for the elderly, children's nursery, children's home or institution, school or any similar occupancy of any capacity*
   2. *Small family day-care homes, large family day-care homes, residential facilities and residential facilities for the elderly, residential care facilities*
   3. *State institutions or other state-owned or state-occupied buildings*
   4. *Residential structures*

5. *Tents, awnings or other fabric enclosures used in connection with any occupancy*
6. *Fire alarm devices, equipment and systems in connection with any occupancy*
7. *Wildland-urban interface fire areas*

1.1.4 Appendices. *Provisions contained in the appendices of this code shall not apply unless specifically adopted by a state agency or adopted by a local enforcing agency in compliance with Health and Safety Code Section 18901 et seq. for Building Standards Law, Health and Safety Code Section 17950 for State Housing Law and Health and Safety Code Section 13869.7 for Fire Protection Districts. See Section 1.1.8 of this code.*

1.1.5 Referenced codes. *The codes, standards and publications adopted and set forth in this code, including other codes, standards and publications referred to therein are, by title and date of publication, hereby adopted as standard reference documents of this code. When this code does not specifically cover any subject related to building design and construction, recognized architectural or engineering practices shall be employed. The National Fire Codes, standards and the Fire Protection Handbook of the National Fire Protection Association are permitted to be used as authoritative guides in determining recognized fire prevention engineering practices.*

1.1.6 Nonbuilding standards, orders and regulations. *Requirements contained in the International Residential Code, or in any other referenced standard, code or document, which are not building standards as defined in Health and Safety Code Section 18909, shall not be construed as part of the provisions of this code. For nonbuilding standards, orders and regulations, see other titles of the California Code of Regulations.*

1.1.7 Order of precedence and use.

1.1.7.1 Differences. *In the event of any differences between these building standards and the standard reference documents, the text of these building standards shall govern.*

1.1.7.2 Specific provisions. *Where a specific provision varies from a general provision, the specific provision shall apply.*

1.1.7.3 Conflicts. *When the requirements of this code conflict with the requirements of any other part of the California Building Standards Code, Title 24, the most restrictive requirements shall prevail.*

1.1.7.3.1 Detached one- and two-family dwellings. *Detached one-and two-family dwellings and townhouses not more than three stories above grade plane with a separate means of egress and their accessory structures shall not be required to comply with the more restrictive requirements contained in Title 24, Part 2, the California Building Code, unless the proposed structure(s) exceed the design limitations established in the California Residential Code and the code user is specifically directed to use the California Building Code.*

1.1.8 City, county, or city and county amendments, additions or deletions. *The provisions of this code do not limit the authority of a city, county, or city and county governments to establish more restrictive and reasonably necessary differences to the provisions contained in this code pursuant to complying with Section 1.1.8.1. The effective date of amendments, additions or deletions to this code by a city, county, or city and county filed pursuant to Section 1.1.8.1 shall be the date filed. However, in no case shall the amendments, additions or deletions to this code be effective any sooner than the effective date of this code.*

Local modifications shall comply with Health and Safety Code Section 18941.5 for Building Standards Law, Health and Safety Code Section 17958 for State Housing Law or Health and Safety Code Section 13869.7 for Fire Protection Districts.

1.1.8.1 Findings and filings.

1. *The city, county, or city and county shall make express findings for each amendment, addition or deletion based upon climatic, topographical or geological conditions.*

   Exception: *Hazardous building ordinances and programs mitigating unreinforced masonry buildings.*

2. *The city, county, or city and county shall file the amendments, additions or deletions expressly marked and identified as to the applicable findings. Cities, counties, cities and counties, and fire departments shall file the amendments, additions or deletions, and the findings with the California Building Standards Commission at 2525 Natomas Park Drive, Suite 130, Sacramento, CA 95833.*
3. *Findings prepared by fire protection districts shall be ratified by the local city, county, or city and county and filed with the California Department of Housing and Community Development, Division of Codes and Standards, P.O. Box 1407, Sacramento, CA 95812-1407 or 1800 3rd Street, Room 260, Sacramento, CA 95811.*

1.1.9 Effective date of this code. *Only those standards approved by the California Building Standards Commission that are effective at the time an application for building permit is submitted shall apply to the plans and specifications for, and to the construction performed under, that permit. For the effective dates of the provisions contained in this code, see the History Note page of this code.*

1.1.10 Availability of codes. *At least one complete copy each of Titles 8, 19, 20, 24 and 25 with all revisions shall be maintained in the office of the building official responsible for the administration and enforcement of this code. Each state department concerned and each city, county, or city and county shall have an up-to-date copy of the code available for public inspection. See Health and Safety Code Section 18942(d) (1) and (2).*

1.1.11 Format. *This part fundamentally adopts the International Residential Code by reference on a chapter-by-chapter basis. When a specific chapter of the International Residen-*

tial Code is not printed in the code and is marked "Reserved" such chapter of the International Residential Code is not adopted as a portion of this code. When a specific chapter of the International Residential Code is marked "Not adopted by the State of California" but appears in the code, it may be available for adoption by local ordinance.

Note: Matrix Adoption Tables at the front of each chapter may aid the code user in determining which chapter or sections within a chapter are applicable to buildings under the authority of a specific state agency, but they are not to be considered regulatory.

1.1.12 Validity. *If any chapter, section, subsection, sentence, clause or phrase of this code is for any reason held to be unconstitutional, contrary to statute, exceeding the authority of the state as stipulated by statutes or otherwise inoperative, such decision shall not affect the validity of the remaining portion of this code.*

SECTION 1.2
Reserved

SECTION 1.3
Reserved

SECTION 1.4
Reserved

SECTION 1.5
Reserved

SECTION 1.6
Reserved

SECTION 1.7
Reserved

SECTION 1.8
DEPARTMENT OF HOUSING AND COMMUNITY DEVELOPMENT (HCD)

1.8.1 Purpose. *The purpose of this code is to establish the minimum requirements necessary to protect the health, safety and general welfare of the occupants and the public by governing accessibility, erection, construction, reconstruction, enlargement, conversion, alteration, repair, moving, removal, demolition, occupancy, use, height, court, area, sanitation, ventilation, maintenance and safety to life and property from fire and other hazards attributed to the built environment.*

SECTION 1.8.2
AUTHORITY AND ABBREVIATIONS

1.8.2.1 General. *The Department of Housing and Community Development is authorized by law to promulgate and adopt building standards and regulations for several types of building applications. The applications under the authority of the Department of Housing and Community Development are listed in Sections 1.8.2.1.1 through 1.8.2.1.3.* >

1.8.2.1.1 Housing construction.

Application*—Hotels, motels, lodging houses, apartment houses, dwellings, dormitories, condominiums, shelters for homeless persons, congregate residences, employee housing, factory-built housing and other types of dwellings containing sleeping accommodations with or without common toilet or cooking facilities including accessory buildings, facilities and uses thereto. Sections of this code which pertain to applications listed in this section are identified using the abbreviation "HCD 1."*

Enforcing agency*—Local building department or the Department of Housing and Community Development.*

Authority cited*—Health and Safety Code Sections 17040, 17050, 17920.9, 17921, 17921.3, 17921.6, 17921.10, 17922, 17922.6, 17922.12, 17927, 17928, 17959.6, 18300, 18552, 18554, 18620, 18630, 18640, 18670, 18690, 18691, 18865, 18871.3, 18871.4, 18873, 18873.1, 18873.2, 18873.3, 18873.4, 18873.5, 18938.3, 18944.11 and 19990; and Government Code Section 12955.1.*

Reference*—Health and Safety Code Sections 17000 through 17062.5, 17910 through 17995.5, 18200 through 18700, 18860 through 18874, 19960 through 19997; and Government Code Sections 12955.1 and 12955.1.1.*

1.8.2.1.2 Housing accessibility.

Application*—"COVERED MULTIFAMILY DWELLINGS" as defined in Chapter 11A of the California Building Code (CBC) including, but not limited to, lodging houses, dormitories, timeshares, condominiums, shelters for homeless persons, congregate residences, apartment houses, dwellings, employee housing, factory-built housing and other types of dwellings containing sleeping accommodations with or without common toilet or cooking facilities.*

Disabled access regulations promulgated under HCD authority are located in Chapter 11A of the California Building Code (CBC) and are identified by the abbreviation "HCD 1-AC." The application of such provisions shall be in conjunction with other requirements of the Building Standards Code and apply only to newly constructed "COVERED MULTIFAMILY DWELLINGS" as defined in CBC Chapter 11A. "HCD 1-AC" applications include, but are not limited to, the following:

1. *All newly constructed "COVERED MULTIFAMILY DWELLINGS" as defined in CBC Chapter 11A.*
2. *New "COMMON USE AREAS" as defined in CBC Chapter 11A serving existing covered multifamily dwellings.*
3. *Additions to existing buildings, where the addition alone meets the definition of "COVERED MULTIFAMILY DWELLINGS" as defined in CBC Chapter 11A.*

4. *Common use areas serving covered multifamily dwellings.*
5. *Where any portion of a building's exterior is preserved, but the interior of the building is removed, including all structural portions of floors and ceilings, the building is considered a new building for the purpose of determining the application of CBC Chapter 11A.*

"HCD 1-AC" building standards generally do not apply to public use areas or public accommodations such as hotels and motels or public housing. Public use areas, public accommodations, public housing and housing which is publicly funded as defined in the CBC are subject to the Division of the State Architect (DSA-AC) and are referenced in CBC Section 1.9.1.

***Enforcing agency**—Local building department or the Department of Housing and Community Development.*

***Authority cited**—Health and Safety Code Sections 17040, 17050, 17920.9, 17921, 17921.3, 17921.6, 17921.10, 17922, 17922.6, 17922.12, 17927, 17928, 17959.6, 18300, 18552, 18554, 18620, 18630, 18640, 18670, 18690, 18691, 18865, 18871.3, 18871.4, 18873, 18873.1, 18873.2, 18873.3, 18873.4, 18873.5, 18938.3, 18944.11 and 19990; and Government Code Section 12955.1.*

***Reference**—Health and Safety Code Sections 17000 through 17062.5, 17910 through 17995.5, 18200 through 18700, 18860 through 18874, 19960 through 19997; and Government Code Sections 12955.1 and 12955.1.1.*

1.8.2.1.3 Permanent buildings in mobilehome parks and special occupancy parks.

***Application**—Permanent buildings, and permanent accessory buildings or structures, constructed within mobilehome parks and special occupancy parks that are under the control and ownership of the park operator. Sections of this code which pertain to applications listed in this section are identified using the abbreviation "HCD 2."*

***Enforcing agency**—The Department of Housing and Community Development, local building department or other local agency that has assumed responsibility for the enforcement of Health and Safety Code, Division 13, Part 2.1, commencing with Section 18200 for mobilehome parks and Health and Safety Code, Division 13, Part 2.3, commencing with Section 18860 for special occupancy parks.*

***Authority cited**—Health and Safety Code Sections 17040, 17050, 17920.9, 17921, 17921.3, 17921.6, 17921.10, 17922, 17922.6, 17922.12, 17927, 17928, 17959.6, 18300, 18552, 18554, 18620, 18630, 18640, 18670, 18690, 18691, 18865, 18871.3, 18871.4, 18873, 18873.1, 18873.2, 18873.3, 18873.4, 18873.5, 18938.3, 18944.11 and 19990; and Government Code Section 12955.1.*

***Reference**—Health and Safety Code Sections 17000 through 17062.5, 17910 through 17995.5, 18200 through 18700, 18860 through 18874 and 19960 through 19997; and Government Code Sections 12955.1 and 12955.1.1.*

SECTION 1.8.3 LOCAL ENFORCING AGENCY

***1.8.3.1 Duties and powers.** The building department of every city, county, or city and county shall enforce all the provisions of law, this code, and the other rules and regulations promulgated by the Department of Housing and Community Development pertaining to the installation, erection, construction, reconstruction, movement, enlargement, conversion, alteration, repair, removal, demolition or arrangement of apartment houses, hotels, motels, lodging houses and dwellings, including accessory buildings, facilities and uses thereto.*

The provisions regulating the erection and construction of dwellings and appurtenant structures shall not apply to existing structures as to which construction is commenced or approved prior to the effective date of these regulations. Requirements relating to use, maintenance and occupancy shall apply to all dwellings and appurtenant structures approved for construction or constructed before or after the effective date of this code.

For additional information regarding the use and occupancy of existing buildings and appurtenant structures, see California Code of Regulations, Title 25, Division 1, Chapter 1, Subchapter 1, commencing with Article 1, Section 1.

***1.8.3.2 Laws, rules and regulations.** Other than the building standards contained in this code, and notwithstanding other provisions of law, the statutory authority and location of the laws, rules and regulations to be enforced by local enforcing agencies are listed by statute in Sections 1.8.3.2.1 through 1.8.3.2.5 below:*

***1.8.3.2.1 State Housing Law.** Refer to the State Housing Law, California Health and Safety Code, Division 13, Part 1.5, commencing with Section 17910 and California Code of Regulations, Title 25, Division 1, Chapter 1, Subchapter 1, commencing with Section 1, for the erection, construction, reconstruction, movement, enlargement, conversion, alteration, repair, removal, demolition or arrangement of apartment houses, hotels, motels, lodging houses and dwellings, including accessory buildings, facilities and uses thereto.*

***1.8.3.2.2 Mobilehome Parks Act.** Refer to the Mobilehome Parks Act, California Health and Safety Code, Division 13, Part 2.1, commencing with Section 18200 and California Code of Regulations, Title 25, Division 1, Chapter 2, commencing with Section 1000 for mobilehome park administrative and enforcement authority, permits, plans, fees, violations, inspections and penalties both within and outside mobilehome parks.*

***Exception:** Mobilehome parks where the Department of Housing and Community Development is the enforcing agency.*

***1.8.3.2.3 Special Occupancy Parks Act.** Refer to the Special Occupancy Parks Act, California Health and Safety*

Code, Division 13, Part 2.3, commencing with Section 18860 and California Code of Regulations, Title 25, Division 1, Chapter 2.2, commencing with Section 2000 for special occupancy park administrative and enforcement authority, permits, fees, violations, inspections and penalties both within and outside of special occupancy parks.

***Exception:** Special occupancy parks where the Department of Housing and Community Development is the enforcing agency.*

***1.8.3.2.4 Employee Housing Act.** Refer to the Employee Housing Act, California Health and Safety Code, Division 13, Part 1, commencing with Section 17000 and California Code of Regulations, Title 25, Division 1, Chapter 1, Subchapter 3, commencing with Section 600 for employee housing administrative and enforcement authority, permits, fees, violations, inspections and penalties.*

***1.8.3.2.5 Factory-Built Housing Law.** Refer to the Factory-Built Housing Law, California Health and Safety Code, Division 13, Part 6, commencing with Section 19960 and California Code of Regulations, Title 25, Division 1, Chapter 3, Subchapter 1, commencing with Section 3000 for factory-built housing administrative and enforcement authority, permits, fees, violations, inspections and penalties.*

SECTION 1.8.4 PERMITS, FEES, APPLICATIONS AND INSPECTIONS

***1.8.4.1 Permits.** A written construction permit shall be obtained from the enforcing agency prior to the erection, construction, reconstruction, installation, moving or alteration of any building or structure.*

Exceptions:

1. *Work exempt from permits as specified in Chapter 1, Scope and Application, Division II, Administration, Section R105.2.*
2. *Changes, alterations or repairs of a minor nature not affecting structural features, egress, sanitation, safety or accessibility as determined by the enforcing agency.*

Exemptions from permit requirements shall not be deemed to grant authorization for any work to be done in any manner in violation of other provisions of law or this code.

***1.8.4.2 Fees.** Subject to other provisions of law, the governing body of any city, county, or city and county may prescribe fees to defray the cost of enforcement of rules and regulations promulgated by the Department of Housing and Community Development. The amount of the fees shall not exceed the amount reasonably necessary to administer or process permits, certificates, forms or other documents, or to defray the costs of enforcement. For additional information, see State Housing Law, Health and Safety Code, Division 13, Part 1.5, Section 17951 and California Code of Regulations, Title 25, Division 1, Chapter 1, Subchapter 1, Article 3, commencing with Section 6.*

***1.8.4.3 Plan review and time limitations.** Subject to other provisions of law, provisions related to plan checking, prohibition of excessive delays and contracting with or employment of private parties to perform plan checking are set forth in State Housing Law, Health and Safety Code Section 17960.1, and for employee housing, in Health and Safety Code Section 17021.*

***1.8.4.3.1 Retention of plans.** The building department of every city, county, or city and county shall maintain an official copy, microfilm, electronic or other type of photographic copy of the plans of every building, during the life of the building, for which the department issued a building permit.*

Exceptions:

1. *Single or multiple dwellings not more than two stories and basement in height.*
2. *Garages and other structures appurtenant to buildings listed in Exception 1.*
3. *Farm or ranch buildings appurtenant to buildings listed in Exception 1.*
4. *Any one-story building where the span between bearing walls does not exceed 25 feet (7620 mm), except a steel frame or concrete building.*

All plans for common interest developments as defined in Section 1351 of the California Civil Code shall be retained. For additional information regarding plan retention and reproduction of plans by an enforcing agency, see Health and Safety Code Sections 19850 through 19852.

***1.8.4.4 Inspections.** Construction or work for which a permit is required shall be subject to inspection by the building official, and such construction or work shall remain accessible and exposed for inspection purposes until approved. Approval as a result of an inspection shall not be construed to be an approval of a violation of the provisions of this code or other regulations of the Department of Housing and Community Development. Required inspections are listed in Chapter 1, Scope and Application, Division II, Administration, Sections R109.1.1, R109.1.1.1, R109.1.3, R109.1.4, R109.1.4.1, R109.1.4.2, R109.1.5, R109.1.5.1, R109.1.5.2, R109.1.6, R109.1.6.1 and R109.1.6.2.*

SECTION 1.8.5 RIGHT OF ENTRY FOR ENFORCEMENT

***1.8.5.1 General.** Subject to other provisions of law, officers and agents of the enforcing agency may enter and inspect public and private properties to secure compliance with the rules and regulations promulgated by the Department of Housing and Community Development. For limitations and additional information regarding enforcement, see the following:*

1. *For applications subject to the State Housing Law as referenced in Section 1.8.3.2.1 of this code, refer to Health and Safety Code, Division 13, Part 1.5, commencing with Section 17910 and California Code of*

Regulations, Title 25, Division 1, Chapter 1, Subchapter 1, commencing with Section 1.

2. *For applications subject to the Mobilehome Parks Act as referenced in Section 1.8.3.2.2 of this code, refer to Health and Safety Code, Division 13, Part 2.1, commencing with Section 18200 and California Code of Regulations, Title 25, Division 1, Chapter 2, commencing with Section 1000.*
3. *For applications subject to the Special Occupancy Parks Act as referenced in Section 1.8.3.2.3 of this Code, refer to Health and Safety Code, Division 13, Part 2.3, commencing with Section 18860 and California Code of Regulations, Title 25, Division 1, Chapter 2.2, commencing with Section 2000.*
4. *For applications subject to the Employee Housing Act as referenced in Section 1.8.3.2.4 of this code, refer to Health and Safety Code, Division 13, Part 1, Section 17000 and California Code of Regulations, Title 25, Division 1, Chapter 1, Subchapter 3, commencing with Section 600.*
5. *For applications subject to the Factory-Built Housing Law as referenced in Section 1.8.3.2.5 of this code, refer to Health and Safety Code, Division 13, Part 6, commencing with Sections 19960 and California Code of Regulations, Title 25, Division 1, Chapter 3, Subchapter 1, commencing with Section 3000.*

SECTION 1.8.6 LOCAL MODIFICATION BY ORDINANCE OR REGULATION

1.8.6.1 General. *Subject to other provisions of law, a city, county, or city and county may make changes to the provisions adopted by the Department of Housing and Community Development. If any city, county, or city and county does not amend, add or repeal by local ordinances or regulations the provisions published in this code or other regulations promulgated by the Department of Housing and Community Development, those provisions shall be applicable and shall become effective 180 days after publication by the California Building Standards Commission. Amendments, additions and deletions to this code adopted by a city, county, or city and county pursuant to California Health and Safety Code Sections 17958.5, 17958.7 and 18941.5, together with all applicable portions of this code, shall also become effective 180 days after publication of the California Building Standards Code by the California Building Standards Commission.*

1.8.6.2 Findings, filings and rejections of local modifications. *Prior to making any modifications or establishing more restrictive building standards, the governing body shall make express findings and filings, as required by California Health and Safety Code Section 17958.7, showing that such modifications are reasonably necessary due to local climatic, geological or topographical conditions. No modification shall become effective or operative unless the following requirements are met:*

1. *The express findings shall be made available as a public record.*
2. *A copy of the modification and express finding, each document marked to cross-reference the other, shall be filed with the California Building Standards Commission for a city, county, or city and county and with the Department of Housing and Community Development for fire protection districts.*
3. *The California Building Standards Commission has not rejected the modification or change.*

Nothing in this section shall limit the authority of fire protection districts pursuant to California Health and Safety Code Section 13869.7(a).

SECTION 1.8.7 ALTERNATE MATERIALS, DESIGNS, TESTS AND METHODS OF CONSTRUCTION

1.8.7.1 General. *The provisions of this code as adopted by the Department of Housing and Community Development are not intended to prevent the use of any alternate material, appliance, installation, device, arrangement, design or method of construction not specifically prescribed by this code. Consideration and approval of alternates shall comply with Section 1.8.7.2 for local building departments and Section 1.8.7.3 for the Department of Housing and Community Development.*

1.8.7.2 Local building departments. *The building department of any city, county, or city and county may approve alternates for use in the erection, construction, reconstruction, movement, enlargement, conversion, alteration, repair, removal, demolition or arrangement of an apartment house, hotel, motel, lodging house, dwelling or an accessory structure, except for the following:*

1. *Structures located in mobilehome parks as defined in California Health and Safety Code Section 18214.*
2. *Structures located in special occupancy parks as defined in California Health and Safety Code Section 18862.43.*
3. *Factory-built housing as defined in California Health and Safety Code Section 19971.*

1.8.7.2.1 Approval of alternates. *The consideration and approval of alternates by a local building department shall comply with the following procedures and limitations:*

1. *The approval shall be granted on a case-by-case basis.*
2. *Evidence shall be submitted to substantiate claims that the proposed alternate, in performance, safety and protection of life and health, conforms to, or is at least equivalent to, the standards contained in this code and other rules and regulations promulgated by the Department of Housing and Community Development.*
3. *The local building department may require tests performed by an approved testing agency at the expense of the owner or owner's agent as proof of compliance.*

4. *If the proposed alternate is related to accessibility in covered multifamily dwellings or in facilities serving "COVERED MULTIFAMILY DWELLINGS" as defined in CBC Chapter 11A, the proposed alternate must also meet the threshold set for "EQUIVALENT FACILITATION" as defined in CBC Chapter 11A.*

For additional information regarding approval of alternates by a building department pursuant to the State Housing Law, see California Health and Safety Code Section 17951(e) and California Code of Regulations, Title 25, Division 1, Chapter 1, Subchapter 1.

1.8.7.3 Department of Housing and Community Development. *The Department of Housing and Community Development may approve alternates for use in the erection, construction, reconstruction, movement, enlargement, conversion, alteration, repair, removal or demolition of an apartment house, hotel, motel, lodging house, dwelling or an accessory thereto and permanent buildings in mobilehome parks and special occupancy parks. The consideration and approval of alternates shall comply with the following:*

1. *The department may require tests at the expense of the owner or owner's agent to substantiate compliance with the California Building Standards Code.*
2. *The approved alternate shall, for its intended purpose, be at least equivalent in performance and safety to the materials, designs, tests or methods of construction prescribed by this code.*

SECTION 1.8.8 APPEALS BOARD

1.8.8.1 General. *Every city, county, or city and county shall establish a process to hear and decide appeals of orders, decisions and determinations made by the enforcing agency relative to the application and interpretation of this code and other regulations governing use, maintenance and change of occupancy. The governing body of any city, county, or city and county may establish a local appeals board and a housing appeals board to serve this purpose. Members of the appeals board(s) shall not be employees of the enforcing agency and shall be knowledgeable in the applicable building codes, regulations and ordinances as determined by the governing body of the city, county, or city and county.*

Where no such appeals boards or agencies have been established, the governing body of the city, county, or city and county shall serve as the local appeals board or housing appeals board as specified in California Health and Safety Code Sections 17920.5 and 17920.6.

1.8.8.2 Definitions. *The following terms shall for the purposes of this section have the meaning shown.*

HOUSING APPEALS BOARD. *The board or agency of a city, county, or city and county which is authorized by the governing body of the city, county, or city and county to hear appeals regarding the requirements of the city, county or city and county relating to the use, maintenance and change of occupancy of buildings and structures, including requirements governing alteration, additions, repair, demolition and moving. In any area in which there is no such board or agency, "Housing Appeals Board" means the local appeals board having jurisdiction over the area.*

LOCAL APPEALS BOARD. *The board or agency of a city, county, or city and county which is authorized by the governing body of the city, county, or city and county to hear appeals regarding the building requirements of the city, county, or city and county. In any area in which there is no such board or agency, "Local Appeals Board" means the governing body of the city, county, or city and county having jurisdiction over the area.*

1.8.8.3 Appeals. *Except as otherwise provided in law, any person, firm or corporation adversely affected by a decision, order or determination by a city, county, or city and county relating to the application of building standards published in the California Building Standards Code, or any other applicable rule or regulation adopted by the Department of Housing and Community Development, or any lawfully enacted ordinance by a city, county, or city and county, may appeal the issue for resolution to the local appeals board or housing appeals board as appropriate.*

The local appeals board shall hear appeals relating to new building construction, and the housing appeals board shall hear appeals relating to existing buildings.

SECTION 1.8.9 UNSAFE BUILDINGS OR STRUCTURES

1.8.9.1 Authority to enforce. *Subject to other provisions of law, the administration, enforcement, actions, proceedings, abatement, violations and penalties for unsafe buildings and structures are contained in the following statutes and regulations:*

1. *For applications subject to the State Housing Law as referenced in Section 1.8.3.2.1 of this code, refer to Health and Safety Code, Division 13, Part 1.5, commencing with Section 17910 and California Code of Regulations, Title 25, Division 1, Chapter 1, Subchapter 1, commencing with Section 1.*
2. *For applications subject to the Mobilehome Parks Act as referenced in Section 1.8.3.2.2 of this code, refer to Health and Safety Code, Division 13, Part 2.1, commencing with Section 18200 and California Code of Regulations, Title 25, Division 1, Chapter 2, commencing with Section 1000.*
3. *For applications subject to the Special Occupancy Parks Act as referenced in Section 1.8.3.2.3 of this code, refer to Health and Safety Code, Division 13, Part 2.3, commencing with Section 18860 and California Code of Regulations, Title 25, Division 1, Chapter 2.2, commencing with Section 2000.*
4. *For applications subject to the Employee Housing Act as referenced in Section 1.8.3.2.4 of this code, refer to Health and Safety Code, Division 13, Part 1, commencing with Section 17000 and California Code of Regulations, Title 25, Division 1, Chapter 1, Subchapter 3, commencing with Section 600.*

5. *For applications subject to the Factory-Built Housing Law as referenced in Section 1.8..2.5 of this code, refer to Health and Safety Code, Division 13, Part 6, commencing with Section 19960 and California Code of Regulations, Title 25, Division 1, Chapter 3, Subchapter 1, commencing with Section 3000.*

1.8.9.2 Actions and proceedings. *Subject to other provisions of law, punishments, penalties and fines for violations of building standards are contained in the following statutes and regulations:*

1. *For applications subject to the State Housing Law as referenced in Section 1.8.3.2.1 of this code, refer to Health and Safety Code, Division 13, Part 1.5, commencing with Section 17910 and California Code of Regulations, Title 25, Division 1, Chapter 1, Subchapter 1, commencing with Section 1.*
2. *For applications subject to the Mobilehome Parks Act as referenced in Section 1.8.3.2.2 of this code, refer to Health and Safety Code, Division 13, Part 2.1, commencing with Section 18200 and California Code of Regulations, Title 25, Division 1, Chapter 2, commencing with Section 1000.*
3. *For applications subject to the Special Occupancy Parks Act as referenced in Section 1.8.3.2.3 of this code, refer to the Health and Safety Code, Division 13, Part 2.3, commencing with Section 18860 and California Code of Regulations, Title 25, Division 1, Chapter 2.2, commencing with Section 2000.*
4. *For applications subject to the Employee Housing Act as referenced in Section 1.8.3.2.4 of this code, refer to Health and Safety Code, Division 13, Part 1, commencing with Section 17000 and California Code of Regulations, Title 25, Division 1, Chapter 1, Subchapter 3, commencing with Section 600.*
5. *For applications subject to the Factory-Built Housing Law as referenced in Section 1.8.3.2.5 of this code, refer to Health and Safety Code, Division 13, Part 6, commencing with Section 19960 and California Code of Regulations, Title 25, Division 1, Chapter 3, Subchapter 1, commencing with Section 3000.*

SECTION 1.8.10 OTHER BUILDING REGULATIONS

1.8.10.1 Existing structures. *Subject to the requirements of California Health and Safety Code Sections 17912, 17920.3, 17922, 17922.3, 17958.8 and 17958.9, provisions relating to existing structures (additions, alterations and repairs) shall only apply as identified in the California Building Code Chapter 34 Matrix Adoption Table under the authority of the Department of Housing and Community Development as listed in Sections 1.8.2.1.1 through 1.8.2.1.3 of this code.*

1.8.10.2 Moved structures. *Subject to the requirements of California Health and Safety Code Sections 17922.3 and 17958.9, provisions relating to a moved residential structure are located in CBC Chapter 34 and shall only apply as identified in the CBC Chapter 34 Matrix Adoption Table under the authority of the Department of Housing and Community Development as listed in Sections 1.8.2.1.1 through 1.8.2.1.3 of this code.*

SECTION 1.9 Reserved

SECTION 1.10 Reserved

SECTION 1.11 OFFICE OF THE STATE FIRE MARSHAL

1.11.1 SFM—Office of the State Fire Marshal. *Specific scope of application of the agency responsible for enforcement, the enforcement agency and the specific authority to adopt and enforce such provisions of this code, unless otherwise stated.*

Application. *Institutional, educational or any similar occupancy. Any building or structure used or intended for use as an asylum, jail, mental hospital, hospital, sanitarium, home for the aged, children's nursery, children's home, school or any similar occupancy of any capacity.*

Authority cited*—Health and Safety Code Section 13143.*

Reference*—Health and Safety Code Section 13143.*

Assembly or similar place of assemblage. *Any theater, dancehall, skating rink, auditorium, assembly hall, meeting hall, nightclub, fair building or similar place of assemblage where 50 or more persons may gather together in a building, room or structure for the purpose of amusement, entertainment, instruction, deliberation, worship, drinking or dining, awaiting transportation, or education.*

Authority cited*—Health and Safety Code Section 13143.*

Reference*—Health and Safety Code Section 13143.*

Small family day-care homes.

Authority cited*—Health and Safety Code Sections 1597.45, 1597.54, 13143 and 17921.*

Reference*—Health and Safety Code Section 13143.*

Large family day-care homes.

Authority cited*—Health and Safety Code Sections 1597.46, 1597.54 and 17921.*

Reference*—Health and Safety Code Section 13143.*

Residential facilities and residential facilities for the elderly.

Authority cited*—Health and Safety Code Section 13133.*

Reference*—Health and Safety Code Section 13143.*

Any state institution or other state-owned or state-occupied building.

Authority cited*—Health and Safety Code Section 13108.*

Reference*—Health and Safety Code Section 13143.*

High-rise structures.

Authority cited*—Health and Safety Code Section 13211.*

Reference*—Health and Safety Code Section 13143.*

Motion picture production studios.

Authority cited*—Health and Safety Code Section 13143.1.*

Reference*—Health and Safety Code Section 13143.*

Organized camps.

Authority cited*—Health and Safety Code Section 18897.3.*

Reference*—Health and Safety Code Section 13143.*

Residential. *All hotels, motels, lodging houses, apartment houses and dwellings, including congregate residences and buildings and structures accessory thereto. Multiple-story structures existing on January 1, 1975, let for human habitation, including and limited to, hotels, motels and apartment houses, less than 75 feet (22 860 mm) above the lowest floor level having building access, wherein rooms used for sleeping are let above the ground floor.*

Authority cited*—Health and Safety Code Sections 13143.2 and 17921.*

Reference*—Health and Safety Code Section 13143.*

Residential care facilities. *Certified family care homes, out-of-home placement facilities, halfway houses, drug and/or alcohol rehabilitation facilities and any building or structure used or intended for use as a home or institution for the housing of any person of any age when such person is referred to or placed within such home or institution for protective social care and supervision services by any governmental agency.*

Authority cited*—Health and Safety Code Section 13143.6.*

Reference*—Health and Safety Code Section 13143.*

Tents, awnings or other fabric enclosures used in connection with any occupancy.

Authority cited*—Health and Safety Code Section 13116.*

Reference*—Health and Safety Code Section 13143.*

Fire alarm devices, equipment and systems in connection with any occupancy.

Authority cited*—Health and Safety Code Section 13114.*

Reference*—Health and Safety Code Section 13143.*

Hazardous materials.

Authority cited*—Health and Safety Code Section 13143.9.*

Reference*—Health and Safety Code Section 13143.*

Flammable and combustible liquids.

Authority cited*—Health and Safety Code Section 13143.6.*

Reference*—Health and Safety Code Section 13143.*

Public school automatic fire detection, alarm and sprinkler systems.

Authority cited*—Health and Safety Code Section 13143 and California Education Code Article 7.5, Sections 17074.50, 17074.52 and 17074.54.*

Reference*—Government Code Section 11152.5, Health and Safety Code Section 13143 and California Education Code Chapter 12.5, Leroy F. Greene School Facilities Act of 1998, Article 1.*

Wildland-Urban interface fire area.

Authority cited*—Health and Safety Code Sections 13143, 13108.5(a) and 18949.2(b) and (c) and Government Code Section 51189.*

Reference*—Health and Safety Code Sections 13143, Government Code Sections 51176, 51177, 51178 and 51179 and Public Resources Code Sections 4201 through 4204.*

1.11.1.1 Adopting agency identification. *The provisions of this code applicable to buildings identified in this Subsection 1.11.1 will be identified in the Matrix Adoption Tables under the acronym SFM.*

1.11.2 Duties and powers of the enforcing agency.

1.11.2.1 Enforcement.

1.11.2.1.1 *The responsibility for enforcement of building standards adopted by the State Fire Marshal and published in the California Building Standards Code relating to fire and panic safety and other regulations of the State Fire Marshal shall except as provided in Section 1.11.2.1.2 be as follows:*

1. *The city, county, or city and county with jurisdiction in the area affected by the standard or regulation shall delegate the enforcement of the building standards relating to fire and panic safety and other regulations of the State Fire Marshal as they relate to Group R-3 occupancies, as described in Section 1.1.3.1 or CCR, Part 2 California Building Code, Section 310.1, to either of the following:*
   - 1.1. *The chief of the fire authority of the city, county or city and county, or an authorized representative.*
   - 1.2. *The chief building official of the city, county or city and county, or an authorized representative.*
2. *The chief of any city or county fire department or of any fire protection district, and authorized representatives, shall enforce within the jurisdiction the building standards and other regulations of the State Fire Marshal, except those described in Item 1 or 4.*
3. *The State Fire Marshal shall have authority to enforce the building standards and other regulations of the State Fire Marshal in areas outside of*

corporate cities and districts providing fire protection services.

4. *The State Fire Marshal shall have authority to enforce the building standards and other regulations of the State Fire Marshal in corporate cities and districts providing fire protection services on request of the chief fire official or the governing body.*
5. *Any fee charged pursuant to the enforcement authority of this section shall not exceed the estimated reasonable cost of providing the service for which the fee is charged pursuant to Section 66014 of the Government Code.*

1.11.2.1.2 *Pursuant to Health and Safety Code Section 13108, and except as otherwise provided in this section, building standards adopted by the State Fire Marshal published in the California Building Standards Code relating to fire and panic safety shall be enforced by the State Fire Marshal in all state-owned buildings, state-occupied buildings and state institutions throughout the state. Upon the written request of the chief fire official of any city, county, or fire protection district, the State Fire Marshal may authorize such chief fire official and his or her authorized representatives, in their geographical area of responsibility, to make fire prevention inspections of state-owned or state-occupied buildings, other than state institutions, for the purpose of enforcing the regulations relating to fire and panic safety adopted by the State Fire Marshal pursuant to this section and building standards relating to fire and panic safety published in the California Building Standards Code. Authorization from the State Fire Marshal shall be limited to those fire departments or fire districts which maintain a fire prevention bureau staffed by paid personnel.*

Pursuant to Health and Safety Code Section 13108, any requirement or order made by any chief fire official who is authorized by the State Fire Marshal to make fire prevention inspections of state-owned or state-occupied buildings, other than state institutions, may be appealed to the State Fire Marshal. The State Fire Marshal shall, upon receiving an appeal and subject to the provisions of Chapter 5 (commencing with Section 18945) of Part 2.5 of Division 13 of the Health and Safety Code, determine if the requirement or order made is reasonably consistent with the fire and panic safety regulations adopted by the State Fire Marshal and building standards relating to fire and panic safety published in the California Building Code.

Any person may request a code interpretation from the State Fire Marshal relative to the intent of any regulation or provision adopted by the State Fire Marshal. When the request relates to a specific project, occupancy or building, the State Fire Marshal shall review the issue with the appropriate local enforcing agency prior to rendering such code interpretation.

1.11.2.1.3 *Pursuant to Health and Safety Code Section 13112, any person who violates any order, rule or regulation of the State Fire Marshal is guilty of a misdemeanor punishable by a fine of not less than $100.00 or more than $500.00, or by imprisonment for not less than six months, or by both. A person is guilty of a separate offense each day during which he or she commits, continues or permits a violation of any provision of, or any order, rule or regulation of, the State Fire Marshal as contained in this code.*

Any inspection authority who, in the exercise of his or her authority as a deputy State Fire Marshal, causes any legal complaints to be filed or any arrest to be made shall notify the State Fire Marshal immediately following such action.

1.11.2.2 Right of entry. *The fire chief of any city, county or fire protection district, or such person's authorized representative, may enter any state institution or any other state-owned or state-occupied building for the purpose of preparing a fire suppression preplanning program or for the purpose of investigating any fire in a state-occupied building.*

The State Fire Marshal, his or her deputies or salaried assistants, the chief of any city or county fire department or fire protection district and his or her authorized representatives may enter any building or premises not used for dwelling purposes at any reasonable hour for the purpose of enforcing this chapter. The owner, lessee, manager or operator of any such building or premises shall permit the State Fire Marshal, his or her deputies or salaried assistants and the chief of any city or county fire department or fire protection district and his or her authorized representatives to enter and inspect them at the time and for the purpose stated in this section.

1.11.2.3 More restrictive fire and panic safety building standards.

1.11.2.3.1 *Any fire protection district organized pursuant to Health and Safety Code Part 2.7 (commencing with Section 13800) of Division 12 may adopt building standards relating to fire and panic safety that are more stringent than those building standards adopted by the State Fire Marshal and contained in the California Building Standards Code. For these purposes, the district board shall be deemed a legislative body and the district shall be deemed a local agency. Any changes or modifications that are more stringent than the requirements published in the California Building Standards Code relating to fire and panic safety shall be subject to Section 1.1.8.1.*

1.11.2.3.2 *Any fire protection district that proposes to adopt an ordinance pursuant to this section shall, not less than 30 days prior to noticing a proposed ordinance for public hearing, provide a copy of that ordinance, together with the adopted findings made pursuant to Section 1.11.2.3.1, to the city, county, or city and county where the ordinance will apply. The city, county, or city and county may provide the district*

with written comments, which shall become part of the fire protection district's public hearing record.

1.11.2.3.3 The fire protection district shall transmit the adopted ordinance to the city, county, or city and county where the ordinance will apply. The legislative body of the city, county, or city and county may ratify, modify or deny an adopted ordinance and transmit its determination to the district within 15 days of the determination. Any modification or denial of an adopted ordinance shall include a written statement describing the reasons for any modifications or denial. No ordinance adopted by the district shall be effective until ratification by the city, county, or city and county where the ordinance will apply. Upon ratification of an adopted ordinance, the city, county, or city and county shall file a copy of the findings of the district, and any findings of the city, county, or city and county, together with the adopted ordinance expressly marked and identified to which each finding refers, in accordance with Section 1.1.8.1:3.

1.11.2.4 Request for alternate means of protection. *Requests for approval to use an alternative material, assembly or materials, equipment, method of construction, method of installation of equipment or means of protection shall be made in writing to the enforcing agency by the owner or the owner's authorized representative and shall be accompanied by a full statement of the conditions. Sufficient evidence or proof shall be submitted to substantiate any claim that may be made regarding its conformance. The enforcing agency may require tests and the submission of a test report from an approved testing organization as set forth in Title 19, California Code of Regulation, to substantiate the equivalency of the proposed alternative means of protection.*

When a request for alternate means of protection involves hazardous materials, the authority having jurisdiction may consider implementation of the findings and recommendations identified in a Risk Management Plan (RMP) developed in accordance with Title 19, Division 2, Chapter 4.5, Article 3.

Approval of a request for use of an alternative material, assembly of materials, equipment, method of construction, method of installation of equipment or means of protection made pursuant to these provisions shall be limited to the particular case covered by request and shall not be construed as establishing any precedent for any future request.

1.11.2.5 Appeals. *When a request for an alternate means of protection has been denied by the enforcing agency, the applicant may file a written appeal to the State Fire Marshal for consideration of the applicant's proposal. In considering such appeal, the State Fire Marshal may seek the advice of the State Board of Fire Services. The State Fire Marshal shall, after considering all of the facts presented, including any recommendations of the State Board of Fire Services, determine if the proposal is for the purposes intended, at least equivalent to that specified in these regulations in quality, strength, effectiveness, fire resistance, durability and safety, and shall transmit such findings and any recommendations to the applicant and to the enforcing agency.*

1.11.3 Construction documents.

1.11.3.1 Public schools. *Plans and specifications for the construction, alteration or addition to any building owned, leased or rented by any public school district shall be submitted to the Division of the State Architect.*

1.11.3.2 Movable walls and partitions. *Plans or diagrams shall be submitted to the enforcing agency for approval before the installation of, or rearrangement of, any movable wall or partition in any occupancy. Approval shall be granted only if there is no increase in the fire hazard.*

1.11.3.3 New construction high-rise buildings.

1. *Complete plans or specifications, or both, shall be prepared covering all work required to comply with new construction high-rise buildings. Such plans and specifications shall be submitted to the enforcing agency having jurisdiction.*
2. *All plans and specifications shall be prepared under the responsible charge of an architect or a civil or structural engineer authorized by law to develop construction plans and specifications, or by both such architect and engineer. Plans and specifications shall be prepared by an engineer duly qualified in that branch of engineering necessary to perform such services. Administration of the work of construction shall be under the charge of the responsible architect or engineer except that where plans and specifications involve alterations or repairs, such work of construction may be administered by an engineer duly qualified to perform such services and holding a valid certificate under Chapter 7 (commencing with Section 65700) of Division 3 of the Business and Professions Code for performance of services in that branch of engineering in which said plans, specifications and estimates and work of construction are applicable.*

This section shall not be construed as preventing the design of fire-extinguishing systems by persons holding a C-16 license issued pursuant to Division 3, Chapter 9, Business and Professions Code. In such instances, however, the responsibility charge of this section shall prevail.

1.11.3.4 Existing high-rise buildings.

1. *Complete plans or specifications, or both, shall be prepared covering all work required by Section 3412 for existing high-rise buildings. Such plans or specifications shall be submitted to the enforcing agency having jurisdiction.*
2. *When new construction is required to conform with the provisions of these regulations, complete plans or specifications, or both, shall be prepared in accordance with the provisions of this subsection. As used in this section, "new construction" is not intended to include repairs, replacements or minor alterations which do not disrupt or appreciably add to or affect the structural aspects of the building.*

1.11.3.5 Retention of plans. *Refer to Building Standards Law, Health and Safety Code Sections 19850 and 19851 for permanent retention of plans.*

1.11.4 Fees.

1.11.4.1 Other fees. *Pursuant to Health and Safety Code Section 13146.2, a city, county or district which inspects a hotel, motel, lodging house or apartment house may charge and collect a fee for the inspection from the owner of the structure in an amount, as determined by the city, county or district, sufficient to pay its costs of that inspection.*

1.11.4.2 Large family day-care. *Pursuant to Health and Safety Code Section 1597.46, Large Family Day-Care Homes, the local government shall process any required permit as economically as possible, and fees charged for review shall not exceed the costs of the review and permit process.*

1.11.4.3 High-rise. *Pursuant to Health and Safety Code Section 13217, High-rise Structure Inspection: Fees and costs, a local agency which inspects a high-rise structure pursuant to Health and Safety Code Section 13217 may charge and collect a fee for the inspection from the owner of the high-rise structure in an amount, as determined by the local agency, sufficient to pay its costs of that inspection.*

1.11.4.4 Fire clearance preinspection. *Pursuant to Health and Safety Code Section 13235, Fire Clearance Preinspection, fee, upon receipt of a request from a prospective licensee of a community care facility, as defined in Section 1502, of a residential care facility for the elderly, as defined in Section 1569.2, or of a child day-care facility, as defined in Section 1596.750, the local fire enforcing agency, as defined in Section 13244, or State Fire Marshal, whichever has primary jurisdiction, shall conduct a preinspection of the facility prior to the final fire clearance approval. At the time of the preinspection, the primary fire enforcing agency shall price consultation and interpretation of the fire safety regulations and shall notify the prospective licensee of the facility in writing of the specific fire safety regulations which shall be enforced in order to obtain fire clearance approval. A fee equal to, but not exceeding, the actual cost of the preinspection services may be charged for the preinspection of a facility with a capacity to serve 25 or fewer persons. A fee equal to, but not exceeding, the actual cost of the preinspection services may be charged for a preinspection of a facility with a capacity to serve 26 or more persons.*

1.11.4.5 Care facilities. *The primary fire enforcing agency shall complete the final fire clearance inspection for a community care facility, residential care facility for the elderly, or child day-care facility within 30 days of receipt of the request for the final inspection, or as of the date the prospective facility requests the final prelicensure inspection by the State Department of Social Services, whichever is later.*

Pursuant to Health and Safety Code Section 13235, a preinspection fee equal to, but not exceeding, the actual cost of the preinspection services may be charged for a facility with a capacity to serve 25 or less clients. A fee equal to, but not exceeding, the actual cost of the preinspection services may be charged for a preinspection of a facility with a capacity to serve 26 or more clients.

Pursuant to Health and Safety Code Section 13131.5, a reasonable final inspection fee, not to exceed the actual cost of inspection services necessary to complete a final inspection may be charged for occupancies classified as residential care facilities for the elderly (RCFE).

Pursuant to Health and Safety Code Section 1569.84, neither the State Fire Marshal nor any local public entity shall charge any fee for enforcing fire inspection regulations pursuant to state law or regulation or local ordinance, with respect to residential care facilities for the elderly (RCFE) which service six or fewer persons.

1.11.4.6 Requests of the Office of the State Fire Marshal. *Whenever a local authority having jurisdiction requests that the State Fire Marshal perform plan review and/or inspection services related to a building permit, the applicable fees for such shall be payable to the Office of the State Fire Marshal.*

1.11.5 Inspections. *Work performed subject to the provisions of this code shall comply with the inspection requirements of Sections R109.1 through R109.1.6.*

1.11.5.1 Existing Group I -1 or R occupancies. *Licensed 24-hour care in a Group I-1 or R occupancy in existence and originally classified under previously adopted state codes shall be reinspected under the appropriate previous code, provided there is no change in the use or character which would place the facility in a different occupancy group.*

1.11.6 Certificate of occupancy. *A certificate of occupancy shall be issued as specified in Section R110.*

1.11.7 Temporary structures and uses. *See Section R107.*

1.11.8 Service utilities. *See Section R111.*

1.11.9 Stop work order. *See Section R114.*

1.11.10 Unsafe buildings, structures and equipment. *See Title 24, Part 2, California Building Code, Section 115.*

SECTION 1.12
Reserved

SECTION 1.13
Reserved

SECTION 1.14
Reserved

DIVISION II
ADMINISTRATION

Division II is not adopted by the Department of Housing and Community Development or the State Fire Marshal except where specifically indicated.

SECTION R101
GENERAL

R101.1 Title. These provisions shall be known as the *Residential Code for One- and Two-family Dwellings* of **[NAME OF JURISDICTION]**, and shall be cited as such and will be referred to herein as "this code."

R101.2 Scope. The provisions of the *California Residential Code for One- and Two-family Dwellings* shall apply to the construction, *alteration*, movement, enlargement, replacement, repair, equipment, use and occupancy, location, removal and demolition of detached one- and two-family dwellings and townhouses not more than three stories above *grade plane* in height with a separate means of egress and their *accessory structures*.

Exceptions:

1. Live/work units complying with the requirements of Section 419 of the *California Building Code* shall be permitted to be built as one- and two-family dwellings or townhouses. Fire suppression required by Section 419.5 of the *California Building Code* when constructed under the *California Residential Code for One- and Two-family Dwellings* shall conform to Section *R313*.
2. Owner-occupied lodging houses with five or fewer guestrooms shall be permitted to be constructed in accordance with the *California Residential Code for One- and Two-family Dwellings* when equipped with a fire sprinkler system in accordance with Section *R313*.

R101.3 Intent. The purpose of this code is to establish minimum requirements to safeguard the public safety, health and general welfare through affordability, structural strength, means of egress facilities, stability, sanitation, light and ventilation, energy conservation and safety to life and property from fire and other hazards attributed to the built environment and to provide safety to fire fighters and emergency responders during emergency operations.

SECTION R102
APPLICABILITY

R102.1 General. Where there is a conflict between a general requirement and a specific requirement, the specific requirement shall be applicable. Where, in any specific case, different sections of this code specify different materials, methods of construction or other requirements, the most restrictive shall govern.

R102.2 Other laws. The provisions of this code shall not be deemed to nullify any provisions of local, state or federal law.

R102.3 Application of references. References to chapter or section numbers, or to provisions not specifically identified by number, shall be construed to refer to such chapter, section or provision of this code.

R102.4 Referenced codes and standards. The codes and standards referenced in this code shall be considered part of the requirements of this code to the prescribed extent of each such reference and as further regulated in Sections R102.4.1 and R102.4.2.

Exception: Where enforcement of a code provision would violate the conditions of the listing of the equipment or appliance, the conditions of the listing and manufacturer's instructions shall apply.

R102.4.1 Conflicts. Where conflicts occur between provisions of this code and referenced codes and standards, the provisions of this code shall apply.

R102.4.2 Provisions in referenced codes and standards. Where the extent of the reference to a referenced code or standard includes subject matter that is within the scope of this code, the provisions of this code, as applicable, shall take precedence over the provisions in the referenced code or standard.

R102.5 Appendices. Provisions in the appendices shall not apply unless specifically referenced in the adopting ordinance.

R102.6 Partial invalidity. In the event any part or provision of this code is held to be illegal or void, this shall not have the effect of making void or illegal any of the other parts or provisions.

R102.7 Existing structures. The legal occupancy of any structure existing on the date of adoption of this code shall be permitted to continue without change, except as is specifically covered in this code, the *International Property Maintenance Code* or the *California Fire Code*, or as is deemed necessary by the building official for the general safety and welfare of the occupants and the public.

R102.7.1 Additions, alterations or repairs. Additions, alterations or repairs to any structure shall conform to the requirements for a new structure without requiring the existing structure to comply with all of the requirements of this code, unless otherwise stated. Additions, alterations or repairs shall not cause an existing structure to become unsafe or adversely affect the performance of the building.

SECTION R103
DEPARTMENT OF BUILDING SAFETY

R103.1 Creation of enforcement agency. The department of building safety is hereby created and the official in charge thereof shall be known as the building official.

R103.2 Appointment. The building official shall be appointed by the chief appointing authority of the jurisdiction.

R103.3 Deputies. In accordance with the prescribed procedures of this jurisdiction and with the concurrence of the appointing authority, the building official shall have the authority to appoint a deputy building official, the related technical officers, inspectors, plan examiners and other employees. Such employees shall have powers as delegated by the building official.

SECTION R104
DUTIES AND POWERS OF THE BUILDING OFFICIAL

R104.1 General. The building official is hereby authorized and directed to enforce the provisions of this code. The building official shall have the authority to render interpretations of this code and to adopt policies and procedures in order to clarify the application of its provisions. Such interpretations, policies and procedures shall be in conformance with the intent and purpose of this code. Such policies and procedures shall not have the effect of waiving requirements specifically provided for in this code.

R104.2 Applications and permits. The building official shall receive applications, review construction documents and issue permits for the erection and alteration of buildings and structures, inspect the premises for which such permits have been issued and enforce compliance with the provisions of this code.

R104.3 Notices and orders. The building official shall issue all necessary notices or orders to ensure compliance with this code.

R104.4 Inspections. The building official is authorized to make all of the required inspections, or the building official shall have the authority to accept reports of inspection by approved agencies or individuals. Reports of such inspections shall be in writing and be certified by a responsible officer of such approved agency or by the responsible individual. The building official is authorized to engage such expert opinion as deemed necessary to report upon unusual technical issues that arise, subject to the approval of the appointing authority.

R104.5 Identification. The building official shall carry proper identification when inspecting structures or premises in the performance of duties under this code.

R104.6 Right of entry. Where it is necessary to make an inspection to enforce the provisions of this code, or where the building official has reasonable cause to believe that there exists in a structure or upon a premises a condition which is contrary to or in violation of this code which makes the structure or premises unsafe, dangerous or hazardous, the building official or designee is authorized to enter the structure or premises at reasonable times to inspect or to perform the duties imposed by this code, provided that if such structure or premises be occupied that credentials be presented to the occupant and entry requested. If such structure or premises be unoccupied, the building official shall first make a reasonable effort to locate the owner or other person having charge or control of the structure or premises and request entry. If entry is refused, the building official shall have recourse to the remedies provided by law to secure entry.

R104.7 Department records. The building official shall keep official records of applications received, permits and certificates issued, fees collected, reports of inspections, and notices and orders issued. Such records shall be retained in the official records for the period required for the retention of public records.

R104.8 Liability. The building official, member of the board of appeals or employee charged with the enforcement of this code, while acting for the jurisdiction in good faith and without malice in the discharge of the duties required by this code or other pertinent law or ordinance, shall not thereby be rendered liable personally and is hereby relieved from personal liability for any damage accruing to persons or property as a result of any act or by reason of an act or omission in the discharge of official duties. Any suit instituted against an officer or employee because of an act performed by that officer or employee in the lawful discharge of duties and under the provisions of this code shall be defended by legal representative of the jurisdiction until the final termination of the proceedings. The building official or any subordinate shall not be liable for cost in any action, suit or proceeding that is instituted in pursuance of the provisions of this code.

R104.9 Approved materials and equipment. Materials, equipment and devices approved by the building official shall be constructed and installed in accordance with such approval.

R104.9.1 Used materials and equipment. Used materials, equipment and devices shall not be reused unless approved by the building official.

R104.10 Modifications. Wherever there are practical difficulties involved in carrying out the provisions of this code, the building official shall have the authority to grant modifications for individual cases, provided the building official shall first find that special individual reason makes the strict letter of this code impractical and the modification is in compliance with the intent and purpose of this code and that such modification does not lessen health, life and fire safety or structural requirements. The details of action granting modifications shall be recorded and entered in the files of the department of building safety.

R104.10.1 Flood hazard areas. The building official shall not grant modifications to any provision related to flood hazard areas as established by Table R301.2(1) without the granting of a variance to such provisions by the board of appeals.

R104.11 Alternative materials, design and methods of construction and equipment. The provisions of this code are not intended to prevent the installation of any material or to prohibit any design or method of construction not specifically prescribed by this code, provided that any such alterna-

tive has been approved. An alternative material, design or method of construction shall be approved where the building official finds that the proposed design is satisfactory and complies with the intent of the provisions of this code, and that the material, method or work offered is, for the purpose intended, at least the equivalent of that prescribed in this code. Compliance with the specific performance-based provisions of the California Codes in lieu of specific requirements of this code shall also be permitted as an alternate.

R104.11.1 Tests. Whenever there is insufficient evidence of compliance with the provisions of this code, or evidence that a material or method does not conform to the requirements of this code, or in order to substantiate claims for alternative materials or methods, the building official shall have the authority to require tests as evidence of compliance to be made at no expense to the jurisdiction. Test methods shall be as specified in this code or by other recognized test standards. In the absence of recognized and accepted test methods, the building official shall approve the testing procedures. Tests shall be performed by an approved agency. Reports of such tests shall be retained by the building official for the period required for retention of public records.

SECTION R105
PERMITS

R105.1 Required. Any owner or authorized agent who intends to construct, enlarge, alter, repair, move, demolish or change the occupancy of a building or structure, or to erect, install, enlarge, alter, repair, remove, convert or replace any electrical, gas, mechanical or plumbing system, the installation of which is regulated by this code, or to cause any such work to be done, shall first make application to the building official and obtain the required permit.

R105.2 Work exempt from permit. Permits shall not be required for the following. Exemption from permit requirements of this code shall not be deemed to grant authorization for any work to be done in any manner in violation of the provisions of this code or any other laws or ordinances of this jurisdiction.

Building:

1. One-story detached accessory structures used as tool and storage sheds, playhouses and similar uses, provided the floor area does not exceed *120* square feet (*11.15* m^2).
2. Fences not over 7 feet (2134 mm) high.
3. Retaining walls that are not over 4 feet (1219 mm) in height measured from the bottom of the footing to the top of the wall, unless supporting a surcharge.
4. Water tanks supported directly upon grade if the capacity does not exceed 5,000 gallons (18 927 L) and the ratio of height to diameter or width does not exceed 2 to 1.
5. Sidewalks and driveways.
6. Painting, papering, tiling, carpeting, cabinets, counter tops and similar finish work.
7. Prefabricated swimming pools that are less than 24 inches (610 mm) deep.
8. Swings and other playground equipment.
9. Window awnings supported by an exterior wall which do not project more than 54 inches (1372 mm) from the exterior wall and do not require additional support.
10. Decks not exceeding 200 square feet (18.58 m^2) in area, that are not more than 30 inches (762 mm) above grade at any point, are not attached to a dwelling and do not serve the exit door required by Section R311.4.

Electrical:

1. Listed cord-and-plug connected temporary decorative lighting.
2. Reinstallation of attachment plug receptacles but not the outlets therefor.
3. Replacement of branch circuit overcurrent devices of the required capacity in the same location.
4. Electrical wiring, devices, appliances, apparatus or equipment operating at less than 25 volts and not capable of supplying more than 50 watts of energy.
5. Minor repair work, including the replacement of lamps or the connection of approved portable electrical equipment to approved permanently installed receptacles.

Gas:

1. Portable heating, cooking or clothes drying appliances.
2. Replacement of any minor part that does not alter approval of equipment or make such equipment unsafe.
3. Portable-fuel-cell appliances that are not connected to a fixed piping system and are not interconnected to a power grid.

Mechanical:

1. Portable heating appliances.
2. Portable ventilation appliances.
3. Portable cooling units.
4. Steam, hot- or chilled-water piping within any heating or cooling equipment regulated by this code.
5. Replacement of any minor part that does not alter approval of equipment or make such equipment unsafe.
6. Portable evaporative coolers.
7. Self-contained refrigeration systems containing 10 pounds (4.54 kg) or less of refrigerant or that are actuated by motors of 1 horsepower (746 W) or less.

8. Portable-fuel-cell appliances that are not connected to a fixed piping system and are not interconnected to a power grid.

The stopping of leaks in drains, water, soil, waste or vent pipe; provided, however, that if any concealed trap, drainpipe, water, soil, waste or vent pipe becomes defective and it becomes necessary to remove and replace the same with new material, such work shall be considered as new work and a permit shall be obtained and inspection made as provided in this code.

The clearing of stoppages or the repairing of leaks in pipes, valves or fixtures, and the removal and reinstallation of water closets, provided such repairs do not involve or require the replacement or rearrangement of valves, pipes or fixtures.

R105.2.1 Emergency repairs. Where equipment replacements and repairs must be performed in an emergency situation, the permit application shall be submitted within the next working business day to the building official.

R105.2.2 Repairs. Application or notice to the building official is not required for ordinary repairs to structures, replacement of lamps or the connection of approved portable electrical equipment to approved permanently installed receptacles. Such repairs shall not include the cutting away of any wall, partition or portion thereof, the removal or cutting of any structural beam or load-bearing support, or the removal or change of any required means of egress, or rearrangement of parts of a structure affecting the egress requirements; nor shall ordinary repairs include addition to, alteration of, replacement or relocation of any water supply, sewer, drainage, drain leader, gas, soil, waste, vent or similar piping, electric wiring or mechanical or other work affecting public health or general safety.

R105.2.3 Public service agencies. A permit shall not be required for the installation, alteration or repair of generation, transmission, distribution, metering or other related equipment that is under the ownership and control of public service agencies by established right.

R105.3 Application for permit. To obtain a permit, the applicant shall first file an application therefor in writing on a form furnished by the department of building safety for that purpose. Such application shall:

1. Identify and describe the work to be covered by the permit for which application is made.
2. Describe the land on which the proposed work is to be done by legal description, street address or similar description that will readily identify and definitely locate the proposed building or work.
3. Indicate the use and occupancy for which the proposed work is intended.
4. Be accompanied by construction documents and other information as required in Section R106.1.
5. State the valuation of the proposed work.
6. Be signed by the applicant or the applicant's authorized agent.
7. Give such other data and information as required by the building official.

R105.3.1 Action on application. The building official shall examine or cause to be examined applications for permits and amendments thereto within a reasonable time after filing. If the application or the construction documents do not conform to the requirements of pertinent laws, the building official shall reject such application in writing stating the reasons therefor. If the building official is satisfied that the proposed work conforms to the requirements of this code and laws and ordinances applicable thereto, the building official shall issue a permit therefor as soon as practicable.

R105.3.1.1 Determination of substantially improved or substantially damaged existing buildings in flood hazard areas. For applications for reconstruction, rehabilitation, addition or other improvement of existing buildings or structures located in a flood hazard area as established by Table R301.2(1), the building official shall examine or cause to be examined the construction documents and shall prepare a finding with regard to the value of the proposed work. For buildings that have sustained damage of any origin, the value of the proposed work shall include the cost to repair the building or structure to its predamaged condition. If the building official finds that the value of proposed work equals or exceeds 50 percent of the market value of the building or structure before the damage has occurred or the improvement is started, the finding shall be provided to the board of appeals for a determination of substantial improvement or substantial damage. Applications determined by the board of appeals to constitute substantial improvement or substantial damage shall require all existing portions of the entire building or structure to meet the requirements of Section R322.

R105.3.2 Time limitation of application. An application for a permit for any proposed work shall be deemed to have been abandoned 180 days after the date of filing unless such application has been pursued in good faith or a permit has been issued; except that the building official is authorized to grant one or more extensions of time for additional periods not exceeding 180 days each. The extension shall be requested in writing and justifiable cause demonstrated.

R105.4 Validity of permit. The issuance or granting of a permit shall not be construed to be a permit for, or an approval of, any violation of any of the provisions of this code or of any other ordinance of the jurisdiction. Permits presuming to give authority to violate or cancel the provisions of this code or other ordinances of the jurisdiction shall not be valid. The issuance of a permit based on construction documents and other data shall not prevent the building official from requiring the correction of errors in the construction documents and other data. The building official is also authorized to prevent occupancy or use of a structure where in violation of this code or of any other ordinances of this jurisdiction.

R105.5 Expiration. Every permit issued shall become invalid unless the work authorized by such permit is commenced within 180 days after its issuance, or if the work authorized by such permit is suspended or abandoned for a

period of 180 days after the time the work is commenced. The building official is authorized to grant, in writing, one or more extensions of time, for periods not more than 180 days each. The extension shall be requested in writing and justifiable cause demonstrated.

R105.6 Suspension or revocation. The building official is authorized to suspend or revoke a permit issued under the provisions of this code wherever the permit is issued in error or on the basis of incorrect, inaccurate or incomplete information, or in violation of any ordinance or regulation or any of the provisions of this code.

R105.7 Placement of permit. The building permit or copy thereof shall be kept on the site of the work until the completion of the project.

R105.8 Responsibility. It shall be the duty of every person who performs work for the installation or repair of building, structure, electrical, gas, mechanical or plumbing systems, for which this code is applicable, to comply with this code.

R105.9 Preliminary inspection. Before issuing a permit, the building official is authorized to examine or cause to be examined buildings, structures and sites for which an application has been filed.

SECTION R106
CONSTRUCTION DOCUMENTS

R106.1 Submittal documents. Submittal documents consisting of construction documents, and other data shall be submitted in two or more sets with each application for a permit. The construction documents shall be prepared by a registered design professional where required by the statutes of the jurisdiction in which the project is to be constructed. Where special conditions exist, the building official is authorized to require additional construction documents to be prepared by a registered design professional.

Exception: The building official is authorized to waive the submission of construction documents and other data not required to be prepared by a registered design professional if it is found that the nature of the work applied for is such that reviewing of construction documents is not necessary to obtain compliance with this code.

R106.1.1 Information on construction documents. Construction documents shall be drawn upon suitable material. Electronic media documents are permitted to be submitted when approved by the building official. Construction documents shall be of sufficient clarity to indicate the location, nature and extent of the work proposed and show in detail that it will conform to the provisions of this code and relevant laws, ordinances, rules and regulations, as determined by the building official. Where required by the building official, all braced wall lines, shall be identified on the construction documents and all pertinent information including, but not limited to, bracing methods, location and length of braced wall panels, foundation requirements of braced wall panels at top and bottom shall be provided.

R106.1.2 Manufacturer's installation instructions. Manufacturer's installation instructions, as required by this code, shall be available on the job site at the time of inspection.

R106.1.3 Information for construction in flood hazard areas. For buildings and structures located in whole or in part in flood hazard areas as established by Table R301.2(1), construction documents shall include:

1. Delineation of flood hazard areas, floodway boundaries and flood zones and the design flood elevation, as appropriate;
2. The elevation of the proposed lowest floor, including basement; in areas of shallow flooding (AO Zones), the height of the proposed lowest floor, including basement, above the highest adjacent grade;
3. The elevation of the bottom of the lowest horizontal structural member in coastal high hazard areas (V Zone); and
4. If design flood elevations are not included on the community's Flood Insurance Rate Map (FIRM), the building official and the applicant shall obtain and reasonably utilize any design flood elevation and floodway data available from other sources.

R106.2 Site plan or plot plan. The construction documents submitted with the application for permit shall be accompanied by a site plan showing the size and location of new construction and existing structures on the site and distances from lot lines. In the case of demolition, the site plan shall show construction to be demolished and the location and size of existing structures and construction that are to remain on the site or plot. The building official is authorized to waive or modify the requirement for a site plan when the application for permit is for alteration or repair or when otherwise warranted.

R106.3 Examination of documents. The building official shall examine or cause to be examined construction documents for code compliance.

R106.3.1 Approval of construction documents. When the building official issues a permit, the construction documents shall be approved in writing or by a stamp which states "REVIEWED FOR CODE COMPLIANCE." One set of construction documents so reviewed shall be retained by the building official. The other set shall be returned to the applicant, shall be kept at the site of work and shall be open to inspection by the building official or his or her authorized representative.

R106.3.2 Previous approvals. This code shall not require changes in the construction documents, construction or designated occupancy of a structure for which a lawful permit has been heretofore issued or otherwise lawfully authorized, and the construction of which has been pursued in good faith within 180 days after the effective date of this code and has not been abandoned.

R106.3.3 Phased approval. The building official is authorized to issue a permit for the construction of foundations or any other part of a building or structure before the construction documents for the whole building or structure have been submitted, provided that adequate information and detailed statements have been filed complying with

pertinent requirements of this code. The holder of such permit for the foundation or other parts of a building or structure shall proceed at the holder's own risk with the building operation and without assurance that a permit for the entire structure will be granted.

R106.4 Amended construction documents. Work shall be installed in accordance with the approved construction documents, and any changes made during construction that are not in compliance with the approved construction documents shall be resubmitted for approval as an amended set of construction documents.

R106.5 Retention of construction documents. One set of approved construction documents shall be retained by the building official for a period of not less than 180 days from date of completion of the permitted work, or as required by state or local laws.

SECTION R107
TEMPORARY STRUCTURES AND USES

R107.1 General. The building official is authorized to issue a permit for temporary structures and temporary uses. Such permits shall be limited as to time of service, but shall not be permitted for more than 180 days. The building official is authorized to grant extensions for demonstrated cause.

R107.2 Conformance. Temporary structures and uses shall conform to the structural strength, fire safety, means of egress, light, ventilation and sanitary requirements of this code as necessary to ensure the public health, safety and general welfare.

R107.3 Temporary power. The building official is authorized to give permission to temporarily supply and use power in part of an electric installation before such installation has been fully completed and the final certificate of completion has been issued. The part covered by the temporary certificate shall comply with the requirements specified for temporary lighting, heat or power in NFPA 70.

R107.4 Termination of approval. The building official is authorized to terminate such permit for a temporary structure or use and to order the temporary structure or use to be discontinued.

SECTION R108
FEES

R108.1 Payment of fees. A permit shall not be valid until the fees prescribed by law have been paid. Nor shall an amendment to a permit be released until the additional fee, if any, has been paid.

R108.2 Schedule of permit fees. On buildings, structures, electrical, gas, mechanical and plumbing systems or alterations requiring a permit, a fee for each permit shall be paid as required, in accordance with the schedule as established by the applicable governing authority.

R108.3 Building permit valuations. Building permit valuation shall include total value of the work for which a permit is being issued, such as electrical, gas, mechanical, plumbing equipment and other permanent systems, including materials and labor.

R108.4 Related fees. The payment of the fee for the construction, alteration, removal or demolition for work done in connection with or concurrently with the work authorized by a building permit shall not relieve the applicant or holder of the permit from the payment of other fees that are prescribed by law.

R108.5 Refunds. The building official is authorized to establish a refund policy.

R108.6 Work commencing before permit issuance. Any person who commences work requiring a permit on a building, structure, electrical, gas, mechanical or plumbing system before obtaining the necessary permits shall be subject to a fee established by the applicable governing authority that shall be in addition to the required permit fees.

SECTION R109
INSPECTIONS

R109.1 Types of inspections. For onsite construction, from time to time the building official, upon notification from the permit holder or his agent, shall make or cause to be made any necessary inspections and shall either approve that portion of the construction as completed or shall notify the permit holder or his or her agent wherein the same fails to comply with this code. *The enforcing agency upon notification of the permit holder or their agent shall within a reasonable time make the inspections set forth in Sections R109.1.1, R109.1.1.1, R109.1.3, R109.1.4, R109.1.4.1, R109.1.4.2, R109.1.5, R109.1.5.1, R109.1.5.2, R109.1.6, R109.1.6.1 and R109.1.6.2.*

Note: Reinforcing steel or structural framework of any part of any building or structure shall not be covered or concealed without first obtaining the approval of the enforcing agency.

R109.1.1 Foundation inspection. Inspection of the foundation shall be made after poles or piers are set or trenches or basement areas are excavated and any required forms erected and any required reinforcing steel is in place and supported prior to the placing of concrete. The foundation inspection shall include excavations for thickened slabs intended for the support of bearing walls, partitions, structural supports, or equipment and special requirements for wood foundations. *Materials for the foundation shall be on the job site except where concrete is ready-mixed in accordance with ASTM C 94. Under this circumstance, concrete is not required to be at the job site.*

R109.1.1.1 Concrete slab and under-floor inspection. *Concrete slab and under-floor inspections shall be made after in-slab or under-floor reinforcing steel and building service equipment, conduits, piping or other ancillary building trade products or equipment are installed, but before any concrete is placed or floor sheathing is installed, including the subfloor.*

R109.1.2 Plumbing, mechanical, gas and electrical systems inspection. Rough inspection of plumbing, mechanical, gas and electrical systems shall be made prior to

covering or concealment, before fixtures or appliances are set or installed, and prior to framing inspection.

Exception: Backfilling of ground-source heat pump loop systems tested in accordance with Section M2105.1 prior to inspection shall be permitted.

R109.1.3 Floodplain inspections. For construction in flood hazard areas as established by Table R301.2(1), upon placement of the lowest floor, including basement, and prior to further vertical construction, the building official shall require submission of documentation, prepared and sealed by a registered design professional, of the elevation of the lowest floor, including basement, required in Section R322.

R109.1.4 Frame and masonry inspection. Inspection of framing and masonry construction shall be made after the roof, masonry, all framing, firestopping, draftstopping and bracing are in place and after *chimneys and vents to be concealed are completed and the rough electrical, plumbing, heating, wires, pipes and ducts* are approved.

R109.1.4.1 Moisture content verification. *Moisture content of framing members shall be verified in accordance with the California Green Building Standards Code, Chapter 4, Division 4.5.*

R109.1.4.2 Lath and gypsum board inspection. *Lath and gypsum board inspections shall be made after lathing and gypsum board, interior and exterior, is in place, but before any plastering is applied or gypsum board joints and fasteners are taped and finished.*

R109.1.5 Other inspections. In addition to the called inspections above, the building official may make or require any other inspections to ascertain compliance with this code and other laws enforced by the building official.

R109.1.5.1 Fire-resistance-rated construction inspection. Where fire-resistance-rated construction is required between dwelling units or due to location on property, the building official shall require an inspection of such construction after all lathing and/or wallboard is in place, but before any plaster is applied, or before wallboard joints and fasteners are taped and finished. *Protection of joints and penetrations in fire-resistance-rated assemblies shall not be concealed from view until inspected and approved.*

R109.1.5.2 Special inspections. *For special inspections, see California Building Code, Chapter 17.*

R109.1.6 Final inspection. Final inspection shall be made after the permitted work is complete and prior to occupancy.

R109.1.6.1 Elevation documentation. If located in a flood hazard area, the documentation of elevations required in Section R322.1.10 shall be submitted to the building official prior to the final inspection.

R109.1.6.2 Operation and maintenance manual. *At the time of final inspection, a manual, compact disc, web-based reference or other media acceptable to the enforcing agency shall be placed in the building in accordance with the California Green Building Standards Code, Chapter 4, Division 4.4.*

R109.2 Inspection agencies. The building official is authorized to accept reports of approved agencies, provided such agencies satisfy the requirements as to qualifications and reliability.

R109.3 Inspection requests. It shall be the duty of the permit holder or their agent to notify the building official that such work is ready for inspection. It shall be the duty of the person requesting any inspections required by this code to provide access to and means for inspection of such work.

R109.4 Approval required. Work shall not be done beyond the point indicated in each successive inspection without first obtaining the approval of the building official. The building official upon notification, shall make the requested inspections and shall either indicate the portion of the construction that is satisfactory as completed, or shall notify the permit holder or an agent of the permit holder wherein the same fails to comply with this code. Any portions that do not comply shall be corrected and such portion shall not be covered or concealed until authorized by the building official.

SECTION R110
CERTIFICATE OF OCCUPANCY

R110.1 Use and occupancy. No building or structure shall be used or occupied, and no change in the existing occupancy classification of a building or structure or portion thereof shall be made until the building official has issued a certificate of occupancy therefor as provided herein. Issuance of a certificate of occupancy shall not be construed as an approval of a violation of the provisions of this code or of other ordinances of the jurisdiction. Certificates presuming to give authority to violate or cancel the provisions of this code or other ordinances of the jurisdiction shall not be valid.

Exceptions:

1. Certificates of occupancy are not required for work exempt from permits under Section R105.2.
2. Accessory buildings or structures.

R110.2 Change in use. Changes in the character or use of an existing structure shall not be made except as specified in Sections 3408 and 3409 of the *California Building Code*.

R110.3 Certificate issued. After the building official inspects the building or structure and finds no violations of the provisions of this code or other laws that are enforced by the department of building safety, the building official shall issue a certificate of occupancy which shall contain the following:

1. The building permit number.
2. The address of the structure.
3. The name and address of the owner.
4. A description of that portion of the structure for which the certificate is issued.
5. A statement that the described portion of the structure has been inspected for compliance with the requirements of this code.
6. The name of the building official.

7. The edition of the code under which the permit was issued.
8. If an automatic sprinkler system is provided and whether the sprinkler system is required.
9. Any special stipulations and conditions of the building permit.

R110.4 Temporary occupancy. The building official is authorized to issue a temporary certificate of occupancy before the completion of the entire work covered by the permit, provided that such portion or portions shall be occupied safely. The building official shall set a time period during which the temporary certificate of occupancy is valid.

R110.5 Revocation. The building official shall, in writing, suspend or revoke a certificate of occupancy issued under the provisions of this code wherever the certificate is issued in error, or on the basis of incorrect information supplied, or where it is determined that the building or structure or portion thereof is in violation of any ordinance or regulation or any of the provisions of this code.

SECTION R111
SERVICE UTILITIES

R111.1 Connection of service utilities. No person shall make connections from a utility, source of energy, fuel or power to any building or system that is regulated by this code for which a permit is required, until approved by the building official.

R111.2 Temporary connection. The building official shall have the authority to authorize and approve the temporary connection of the building or system to the utility, source of energy, fuel or power.

R111.3 Authority to disconnect service utilities. The building official shall have the authority to authorize disconnection of utility service to the building, structure or system regulated by this code and the referenced codes and standards set forth in Section R102.4 in case of emergency where necessary to eliminate an immediate hazard to life or property or when such utility connection has been made without the approval required by Section R111.1 or R111.2. The building official shall notify the serving utility and whenever possible the owner and occupant of the building, structure or service system of the decision to disconnect prior to taking such action if not notified prior to disconnection. The owner or occupant of the building, structure or service system shall be notified in writing as soon as practical thereafter.

SECTION R112
BOARD OF APPEALS

R112.1 General. In order to hear and decide appeals of orders, decisions or determinations made by the building official relative to the application and interpretation of this code, there shall be and is hereby created a board of appeals. The building official shall be an ex officio member of said board but shall have no vote on any matter before the board. The board of appeals shall be appointed by the governing body and shall hold office at its pleasure. The board shall adopt rules of procedure for conducting its business, and shall render all decisions and findings in writing to the appellant with a duplicate copy to the building official.

R112.2 Limitations on authority. An application for appeal shall be based on a claim that the true intent of this code or the rules legally adopted thereunder have been incorrectly interpreted, the provisions of this code do not fully apply, or an equally good or better form of construction is proposed. The board shall have no authority to waive requirements of this code.

R112.2.1 Determination of substantial improvement in flood hazard areas. When the building official provides a finding required in Section R105.3.1.1, the board of appeals shall determine whether the value of the proposed work constitutes a substantial improvement. A substantial improvement means any repair, reconstruction, rehabilitation, addition or improvement of a building or structure, the cost of which equals or exceeds 50 percent of the market value of the building or structure before the improvement or repair is started. If the building or structure has sustained substantial damage, all repairs are considered substantial improvement regardless of the actual repair work performed. The term does not include:

1. Improvements of a building or structure required to correct existing health, sanitary or safety code violations identified by the building official and which are the minimum necessary to assure safe living conditions; or
2. Any alteration of an historic building or structure, provided that the alteration will not preclude the continued designation as an historic building or structure. For the purpose of this exclusion, an historic building is:
   2.1. Listed or preliminarily determined to be eligible for listing in the National Register of Historic Places; or
   2.2. Determined by the Secretary of the U.S. Department of Interior as contributing to the historical significance of a registered historic district or a district preliminarily determined to qualify as an historic district; or
   2.3. Designated as historic under a state or local historic preservation program that is approved by the Department of Interior.

R112.2.2 Criteria for issuance of a variance for flood hazard areas. A variance shall be issued only upon:

1. A showing of good and sufficient cause that the unique characteristics of the size, configuration or topography of the site render the elevation standards in Section R322 inappropriate.
2. A determination that failure to grant the variance would result in exceptional hardship by rendering the *lot* undevelopable.
3. A determination that the granting of a variance will not result in increased flood heights, additional threats to public safety, extraordinary public

expense, cause fraud on or victimization of the public, or conflict with existing local laws or ordinances.

4. A determination that the variance is the minimum necessary to afford relief, considering the flood hazard.
5. Submission to the applicant of written notice specifying the difference between the design flood elevation and the elevation to which the building is to be built, stating that the cost of flood insurance will be commensurate with the increased risk resulting from the reduced floor elevation, and stating that construction below the design flood elevation increases risks to life and property.

R112.3 Qualifications. The board of appeals shall consist of members who are qualified by experience and training to pass on matters pertaining to building construction and are not employees of the jurisdiction.

R112.4 Administration. The building official shall take immediate action in accordance with the decision of the board.

SECTION R113
VIOLATIONS

R113.1 Unlawful acts. It shall be unlawful for any person, firm or corporation to erect, construct, alter, extend, repair, move, remove, demolish or occupy any building, structure or equipment regulated by this code, or cause same to be done, in conflict with or in violation of any of the provisions of this code.

R113.2 Notice of violation. The building official is authorized to serve a notice of violation or order on the person responsible for the erection, construction, alteration, extension, repair, moving, removal, demolition or occupancy of a building or structure in violation of the provisions of this code, or in violation of a detail statement or a plan approved thereunder, or in violation of a permit or certificate issued under the provisions of this code. Such order shall direct the discontinuance of the illegal action or condition and the abatement of the violation.

R113.3 Prosecution of violation. If the notice of violation is not complied with in the time prescribed by such notice, the building official is authorized to request the legal counsel of the jurisdiction to institute the appropriate proceeding at law or in equity to restrain, correct or abate such violation, or to require the removal or termination of the unlawful occupancy of the building or structure in violation of the provisions of this code or of the order or direction made pursuant thereto.

R113.4 Violation penalties. Any person who violates a provision of this code or fails to comply with any of the requirements thereof or who erects, constructs, alters or repairs a building or structure in violation of the approved construction documents or directive of the building official, or of a permit or certificate issued under the provisions of this code, shall be subject to penalties as prescribed by law.

SECTION R114
STOP WORK ORDER

R114.1 Notice to owner. Upon notice from the building official that work on any building or structure is being prosecuted contrary to the provisions of this code or in an unsafe and dangerous manner, such work shall be immediately stopped. The stop work order shall be in writing and shall be given to the owner of the property involved, or to the owner's agent or to the person doing the work and shall state the conditions under which work will be permitted to resume.

R114.2 Unlawful continuance. Any person who shall continue any work in or about the structure after having been served with a stop work order, except such work as that person is directed to perform to remove a violation or unsafe condition, shall be subject to penalties as prescribed by law.

CALIFORNIA RESIDENTIAL CODE – MATRIX ADOPTION TABLE
CHAPTER 2 – DEFINITIONS

(Matrix Adoption Tables are non-regulatory, intended only as an aid to the user.
See Chapter 1 for state agency authority and building applications.)

Adopting agency	BSC	SFM	HCD			DSA		OSHPD				BSCC	DHS	AGR	DWR	CEC	CA	SL	SLC
			1	2	1/AC	AC	SS	1	2	3	4								
Adopt entire chapter																			
Adopt entire chapter as amended (amended sections listed below)			X																
Adopt only those sections that are listed below		X																	
Chapter / Section																			
R201.1		X																	
R201.2		X																	
R201.3		X	X																
R201.4		X																	
ACCESSORY STRUCTURE		X																	
ADDITION		X																	
AGED HOME OR INSTITUTION		X																	
ALTERATION		X	*X*																
APPROVED		X	X																
APPROVED AGENCY		X	X																
APPROVED LISTING AGENCY		X	X																
APPROVED TESTING AGENCY		X	X																
ATTIC		X																	
ATTIC, HABITABLE		X																	
BASEMENT		X																	
BEDRIDDEN PERSON		X																	
BUILDING		X	X																
BUILDING OFFICIAL		X																	
BUILT-UP ROOF COVERING		X																	
CARE AND SUPERVISION		X																	
CATASTROPHICALLY INJURED		X																	
CEILING HEIGHT		X																	
CHILD-CARE CENTER		X																	
CHILD OR CHILDREN		X																	
CHRONICALLY ILL		X																	
CLOSET		X																	
COMBUSTIBLE MATERIAL		X																	
CONGREGATE LIVING HEALTH-FACILITY (CLHF)		X																	
CONGREGATE RESIDENCE		X																	
CONSTRUCTION DOCUMENTS		X																	
DAYCARE		X																	
DAY-CARE HOME, LARGE FAMILY		X																	
DAY-CARE HOME, SMALL FAMILY		X																	
DEPARTMENT			X																
DESIGN PROFESSIONAL		X																	

(continued)

CALIFORNIA FIRE CODE – MATRIX ADOPTION TABLE
CHAPTER 2 – DEFINITIONS—continued

Adopting agency	BSC	SFM	HCD			DSA		OSHPD				BSCC	DHS	AGR	DWR	CEC	CA	SL	SLC
			1	2	1/AC	AC	SS	1	2	3	4								
Adopt entire chapter																			
Adopt entire chapter as amended (amended sections listed below)			X	X															
Adopt only those sections that are listed below		X																	
Chapter / Section																			
DRAFT STOP		X																	
DWELLING		X																	
DWELLING UNIT		X																	
EFFICIENCY DWELLING UNIT			*X*																
EMERGENCY ESCAPE AND RESCUE OPENING		X																	
ENFORCEMENT			X																
ENFORCING AGENCY		X	X																
ENFORCEMENT AGENCY			X																
EXTERIOR WALL		X																	
FAMILY			X																
FENESTRATION			X																
FIREBLOCKING		X																	
FIRE-RETARDANT-TREATED WOOD		X																	
FIRE SEPARATION DISTANCE		X																	
FLAME SPREAD		X																	
FLAME SPREAD INDEX		X																	
FULL-TIME CARE		X																	
GRADE		X																	
GRADE FLOOR OPENING		X																	
GRADE PLANE		X																	
GUARD OR GUARDRAIL		*X*	*X*																
HABITABLE SPACE		X																	
HANDRAIL		X																	
HAZARDOUS LOCATION		X																	
HEIGHT, BUILDING		X																	
HEIGHT, STORY		X																	
IGNITION SOURCE		X																	
INSULATING SHEATHING		*X*	*X*																
INFANT		X																	
LABEL		X																	
LABELED		X	X																
LIMITED-DENSITY OWNER-BUILT RURAL DWELLINGS			X																
LISTED		X	X																
LISTING AGENCY			X																
LIVING SPACE		X																	
LODGING HOUSE			*X*																
LOT		X																	
LOT LINE		X																	
MARK		X																	

(continued)

CALIFORNIA FIRE CODE – MATRIX ADOPTION TABLE
CHAPTER 2 – DEFINITIONS—continued

Adopting agency	BSC	SFM	HCD			DSA		OSHPD				BSCC	DHS	AGR	DWR	CEC	CA	SL	SLC
			1	2	1/AC	AC	SS	1	2	3	4								
Adopt entire chapter																			
Adopt entire chapter as amended (amended sections listed below)			X	X															
Adopt only those sections that are listed below		X																	
Chapter / Section		X																	
MENTALLY RETARDED PERSONS, PROFOUNDLY OR SEVERELY		X																	
METAL ROOF PANEL		X																	
METAL ROOF SHINGLE		X																	
MEZZANINE, LOFT		X																	
MULTIPLE STATION SMOKE ALARM		X																	
NONAMBULATORY PERSONS		X																	
NONCOMBUSTIBLE MATERIAL		X																	
OCCUPIED SPACE		X																	
OWNER		X																	
PASSIVE SOLAR ENERGY COLLECTOR			X																
PRESIDENTIAL FACILITY (RF)		X																	
PROTECTIVE SOCIAL CARE FACILITY		X																	
PUBLIC WAY		X																	
RAMP		X																	
REPAIR		X	*X*																
REROOFING		X																	
RESIDENTIAL CARE FACILITY FOR THE CHRONICALLY ILL (RCF/CI)		X																	
RESIDENTIAL CARE FACILITY FOR THE ELDERLY (RCFE)		X																	
RESTRAINT		X																	
RISER			*X*																
ROOF ASSEMBLY		X																	
ROOF COVERING		X																	
ROOF COVERING SYSTEM		X																	
ROOFDECK		X																	
ROOF RECOVER		X																	
ROOF REPAIR		X																	
ROOFTOP STRUCTURE		X																	
SHALL		X																	
SINGLE STATION SMOKE ALARM		X																	
SMOKE-DEVELOPED INDEX		X																	
STAIR		X																	
STAIRWAY		X																	
STATE-OWNED/LEASED BUILDING		X																	

(continued)

CALIFORNIA FIRE CODE – MATRIX ADOPTION TABLE
CHAPTER 2 – DEFINITIONS—continued

Adopting agency	BSC	SFM	HCD			DSA		OSHPD				BSCC	DHS	AGR	DWR	CEC	CA	SL	SLC
			1	2	1/AC	AC	SS	1	2	3	4								
Adopt entire chapter																			
Adopt entire chapter as amended (amended sections listed below)			X	X															
Adopt only those sections that are listed below		X																	
Chapter / Section																			
STORY		X																	
STORY ABOVE GRADE PLANE		X																	
STRUCTURE		X																	
SUNROOM			*X*																
TERMINALLY ILL		X																	
TESTING AGENCY			X																
TOWNHOUSE		X																	
VENTILATION			*X*																

Part II—Definitions

CHAPTER 2

DEFINITIONS

SECTION R201
GENERAL

R201.1 Scope. Unless otherwise expressly stated, the following words and terms shall, for the purposes of this code, have the meanings indicated in this chapter.

R201.2 Interchangeability. Words used in the present tense include the future; words in the masculine gender include the feminine and neuter; the singular number includes the plural and the plural, the singular.

R201.3 Terms defined in other codes. Where terms are not defined in this code such terms shall have meanings ascribed to them as *in the California Building Standards Code, Title 24, California Code of Regulations.*

R201.4 Terms not defined. Where terms are not defined through the methods authorized by this section, such terms shall have ordinarily accepted meanings such as the context implies.

For applications listed in Section 1.11 regulated by the Office of the State Fire Marshal, where terms are not defined through the methods authorized by this section, such terms shall have ordinarily accepted meanings such as the context implies. Webster's Third New International Dictionary of the English Language, Unabridged, shall be considered as providing ordinarily accepted meanings.

SECTION R202
DEFINITIONS

ACCESSORY STRUCTURE. A structure not greater than 3,000 square feet (279 m^2) in floor area, and not over two stories in height, the use of which is customarily accessory to and incidental to that of the dwelling(s) and which is located on the same lot.

ADDITION. An extension or increase in floor area or height of a building or structure.

ADHERED STONE OR MASONRY VENEER. Stone or masonry veneer secured and supported through the adhesion of an approved bonding material applied to an approved backing.

AGED HOME OR INSTITUTION. *A facility used for the housing of persons 65 years of age or older in need of care and supervision. (See definition of "care and supervision")*

ALTERATION. Any construction or renovation to an existing structure other than repair or addition.

ANCHORED STONE OR MASONRY VENEER. Stone or masonry veneer secured with approved mechanical fasteners to an approved backing.

ANCHORS. See "Supports."

APPROVED. Acceptable to the building official.

APPROVED. (HCD 1) *Meeting the approval of the enforcing agency, except as otherwise provided by law, when used in connection with any system, material, type of construction, fixture or appliance as the result of investigations and tests conducted by the agency, or by reason of accepted principles or tests by national authorities or technical, health, or scientific organizations or agencies.*

Notes:

1. *See Health and Safety Code Section 17920 for "Approved" as applied to residential construction and buildings or structures accessory thereto, as referenced in Section 1.8.2.1.1.*
2. *See Health and Safety Code Section 17921.1 for "Approved" as applied to the use of hotplates in residential construction referenced in Section 1.8.2.1.1.*
3. *See Health and Safety Code Section 19966 for "Approved" as applied to factory-built housing as referenced in Section 1.8.3.2.5.*
4. *See Health and Safety Code Section 18201 for "Approved" as applied to mobilehome parks as referenced in Section 1.8.3.2.2.*
5. *See Health and Safety Code Section 18862.1 for "Approved" as applied to special occupancy parks as referenced in Section 1.8.3.2.3.*

APPROVED AGENCY. An established and recognized agency regularly engaged in conducting tests or furnishing inspection services, when such agency has been approved by the building official. *(HCD 1) "Approved agency" shall mean "Listing agency" and "Testing agency."*

APPROVED LISTING AGENCY. *Any agency approved by the enforcing agency, unless otherwise provided by statute, which is in the business of listing and labeling and which makes available at least an annual published report of such listings in which specific information is included that the product has been tested to recognized standards and found to comply.*

APPROVED TESTING AGENCY. *Any agency which is determined by the enforcing agency, except as otherwise provided by statute, to have adequate personnel and expertise to carry out the testing of systems, materials, and construction fixtures or appliances.*

ASPECT RATIO. The ratio of longest to shortest perpendicular dimensions, or for wall sections, the ratio of height to length.

ATTIC. The unfinished space between the ceiling assembly of the top story and the roof assembly.

ATTIC, HABITABLE. A finished or unfinished area, not considered a story, complying with all of the following requirements:

1. The occupiable floor area is at least 70 square feet (17 m^2), in accordance with Section R304,
2. The occupiable floor area has a ceiling height in accordance with Section R305, and
3. The occupiable space is enclosed by the roof assembly above, knee walls (if applicable) on the sides and the floor-ceiling assembly below.

BASEMENT. A story that is not a story above grade plane. (see "Story above grade plane").

BASEMENT WALL. The opaque portion of a wall that encloses one side of a basement and has an average below grade wall area that is 50 percent or more of the total opaque and non-opaque area of that enclosing side.

BASIC WIND SPEED. Three-second gust speed at 33 feet (10 058 mm) above the ground in Exposure C (see Section R301.2.1) as given in Figure R301.2(4)A.

BEDRIDDEN PERSON. *A person, requiring assistance in turning and repositioning in bed, or being unable to independently transfer to and from bed, except in facilities with appropriate and sufficient care staff, mechanical devices if necessary, and safety precautions as determined in Title 22 regulations, by the Director of Social Services or his or her designated representative. Persons who are unable to independently transfer to and from bed, but who do not need assistance to turn or reposition in bed, shall be considered nonambulatory.*

The Director of Social Services or his or her designated representative shall make the determination of the bedridden status of persons with developmental disabilities, in consultation with the Director of Developmental Services or his or her designated representative.

The Director of Social Services or his or her designated representative shall make the determination of the bedridden status of all other persons with disabilities who are not developmentally disabled.

BOND BEAM. A horizontal grouted element within masonry in which reinforcement is embedded.

BRACED WALL LINE. A straight line through the building plan that represents the location of the lateral resistance provided by the wall bracing.

BRACED WALL LINE, CONTINUOUSLY SHEATHED. A braced wall line with structural sheathing applied to all sheathable surfaces including the areas above and below openings.

BRACED WALL PANEL. A full-height section of wall constructed to resist in-plane shear loads through interaction of framing members, sheathing material and anchors. The panel's length meets the requirements of its particular bracing method, and contributes toward the total amount of bracing required along its braced wall line in accordance with Section R602.10.1.

BUILDING. Building shall mean any one- and two-family dwelling or portion thereof, including *townhouses*, that is used, or designed or intended to be used for human habitation, for living, sleeping, cooking or eating purposes, or any combination thereof, and shall include accessory structures thereto.

Exceptions: *For applications listed in Section 1.8.2 regulated by the Department of Housing and Community Development, "Building" shall not include the following:*

1. *Any mobilehome as defined in Health and Safety Code Section 18008.*
2. *Any manufactured home as defined in Health and Safety Code Section 18007.*
3. *Any commercial modular as defined in Health and Safety Code Section 18001.8 or any special purpose commercial modular as defined in Section 18012.5.*
4. *Any recreational vehicle as defined in Health and Safety Code Section 18010.*
5. *Any multifamily manufactured home as defined in Health and Safety Code Section 18008.7.*

For additional information, see Health and Safety Code Section 18908.

Note: *Building shall have the same meaning as defined in Health and Safety Code Sections 17920 and 18908 for the applications specified in Section 1.11.*

BUILDING, EXISTING. Existing building is a building erected prior to the adoption of this code, or one for which a legal building permit has been issued.

BUILDING LINE. The line established by law, beyond which a building shall not extend, except as specifically provided by law.

BUILDING OFFICIAL. The officer or other designated authority charged with the administration and enforcement of this code.

BUILT-UP ROOF COVERING. Two or more layers of felt cemented together and surfaced with a cap sheet, mineral aggregate, smooth coating or similar surfacing material.

CAP PLATE. The top plate of the double top plates used in structural insulated panel (SIP) construction. The cap plate is cut to match the panel thickness such that it overlaps the wood structural panel facing on both sides.

CARE AND SUPERVISION. *Any one or more of the following activities provided by a person or facility to meet the needs of the clients:*

Assistance in dressing, grooming, bathing and other personal hygiene

Assistance with taking medication

Central storing and/or distribution of medications

Arrangement of and assistance with medical and dental care

Maintenance of house rules for the protection of clients

Supervision of client schedules and activities

Maintenance and/or supervision of client cash resources or property

Monitoring food intake or special diets

Providing basic services required by applicable law and regulation to be provided by the licensee in order to obtain and maintain a community-care facility license

CATASTROPHICALLY INJURED. *A person whose origin of disability was acquired through trauma or nondegenerative neurologic illness, for whom it has been determined by the Department of Health Services Certification and Licensing that active rehabilitation would be beneficial.*

CEILING HEIGHT. The clear vertical distance from the finished floor to the finished ceiling.

CEMENT PLASTER. A mixture of portland or blended cement, portland cement or blended cement and hydrated lime, masonry cement or plastic cement and aggregate and other approved materials as specified in this code.

CHILD-CARE CENTER. *Any facility of any capacity other than a large or small family day-care home as defined in these regulations in which less than 24-hour-per-day nonmedical supervision is provided for children in a group setting.*

CHILD OR CHILDREN. *A person or persons under the age of 18 years.*

CHRONICALLY ILL. *See "TERMINALLY ILL."*

CLADDING. The exterior materials that cover the surface of the building envelope that is directly loaded by the wind.

CLOSET. A small room or chamber used for storage.

COMBUSTIBLE MATERIAL. Any material not defined as noncombustible.

CONGREGATE LIVING HEALTH FACILITY (CLHF). *A residential home with a capacity of no more than six beds, which provides inpatient care, including the following basic services: medical supervision, 24-hour skilled nursing and supportive care, pharmacy, dietary, social recreational, and at least provides services for persons who are diagnosed with a terminal illness or who are catastrophically and severely disabled.*

CONGREGATE RESIDENCE. *Any building or portion thereof that contains facilities for living, sleeping and sanitation, as required by this code, and may include facilities for eating and cooking, for occupancy by other than a family. A congregate residence may be a shelter, convent, monastery, dormitory, fraternity or sorority house, but does not include jails, hospitals, nursing homes, hotels or lodging houses.*

CONSTRUCTION DOCUMENTS. Written, graphic and pictorial documents prepared or assembled for describing the design, location and physical characteristics of the elements of a project necessary for obtaining a building permit. Construction drawings shall be drawn to an appropriate scale.

CORE. The light-weight middle section of the structural insulated panel composed of foam plastic insulation, which provides the link between the two facing shells.

CORROSION RESISTANCE. The ability of a material to withstand deterioration of its surface or its properties when exposed to its environment.

COURT. A space, open and unobstructed to the sky, located at or above grade level on a lot and bounded on three or more sides by walls or a building.

CRIPPLE WALL. A framed wall extending from the top of the foundation to the underside of the floor framing of the first story above grade plane.

DALLE GLASS. A decorative composite glazing material made of individual pieces of glass that are embedded in a cast matrix of concrete or epoxy.

DAY CARE *shall, for the purposes of these regulations, mean the care of persons during any period of a 24-hour day where permanent sleeping accommodations are not provided.*

Note: *"Day care" shall not be construed to preclude the use of cots or mats for napping purposes, provided all employees, attendants and staff personnel are awake and on duty in the area where napping occurs.*

DAY-CARE HOME, FAMILY. *A home that regularly provides care, protection and supervision for 14 or fewer children, in the provider's own home, for periods of less than 24 hours per day, while the parents or guardians are away, and is either a large family day-care home or a small family day-care home.*

DAY-CARE HOME, LARGE FAMILY. *A provider's own home which is licensed to provide day care for periods less than 24 hours per day for nine to 14 persons, including children under the age of 10 years who reside at the home.*

DAY-CARE HOME, SMALL FAMILY. *A home which provides family day-care to eight or fewer children, including children under the age of 10 years who reside at the home, in the provider's own home, for periods of less than 24 hours per day. Small family day-care homes are exempted from state fire and life safety regulations other than those state and local standards applicable to Group R-3 Occupancies. [See Health and Safety Code, Section 13143 (b).]*

DEAD LOADS. The weight of all materials of construction incorporated into the building, including but not limited to walls, floors, roofs, ceilings, stairways, built-in partitions, finishes, cladding, and other similarly incorporated architectural and structural items, and fixed service equipment.

DECORATIVE GLASS. A carved, leaded or Dalle glass or glazing material whose purpose is decorative or artistic, not functional; whose coloring, texture or other design qualities or components cannot be removed without destroying the glazing material; and whose surface, or assembly into which it is incorporated, is divided into segments.

DESIGN PROFESSIONAL. See "Registered design professional."

DEPARTMENT. *The Department of Housing and Community Development.*

DIAPHRAGM. A horizontal or nearly horizontal system acting to transmit lateral forces to the vertical resisting elements. When the term "diaphragm" is used, it includes horizontal bracing systems.

DRAFT STOP. A material, device or construction installed to restrict the movement of air within open spaces of concealed areas of building components such as crawl spaces, floor-ceiling assemblies, roof-ceiling assemblies and attics.

DWELLING. Any building that contains one or two dwelling units used, intended, or designed to be built, used, rented, leased, let or hired out to be occupied, or that are occupied for living purposes.

DWELLING UNIT. A single unit providing complete independent living facilities for one or more persons, including permanent provisions for living, sleeping, eating, cooking and sanitation.

EFFICIENCY DWELLING UNIT. A dwelling unit containing only one habitable room and includes an efficiency unit as defined by Health and Safety Code Section 17958.1. See Section R304.

EMERGENCY ESCAPE AND RESCUE OPENING. An operable exterior window, door or similar device that provides for a means of escape and access for rescue in the event of an emergency.

ENFORCEMENT. Notwithstanding other provisions of law, the applicable section of the Health and Safety Code, Section 17920, is repeated here for clarity:

"Enforcement" means diligent effort to secure compliance, including review of plans and permit applications, response to complaints, citation of violations, and other legal process. Except as otherwise provided in this part, "enforcement" may, but need not, include inspections of existing buildings on which no complaint or permit application has been filed, and effort to secure compliance as to these existing buildings.

ENFORCEMENT AGENCY. See "ENFORCING AGENCY."

ENFORCING AGENCY. The designated department or agency as specified by statute or regulation.

ESCARPMENT. With respect to topographic wind effects, a cliff or steep slope generally separating two levels or gently sloping areas.

EXTERIOR INSULATION AND FINISH SYSTEMS (EIFS). EIFS are nonstructural, nonload-bearing exterior wall cladding systems that consist of an insulation board attached either adhesively or mechanically, or both, to the substrate; an integrally reinforced base coat; and a textured protective finish coat.

EXTERIOR INSULATION AND FINISH SYSTEMS (EIFS) WITH DRAINAGE. An EIFS that incorporates a means of drainage applied over a water-resistive barrier.

EXTERIOR WALL. An above-grade wall that defines the exterior boundaries of a building. Includes between-floor spandrels, peripheral edges of floors, roof and basement knee walls, dormer walls, gable end walls, walls enclosing a mansard roof and basement walls with an average below-grade wall area that is less than 50 percent of the total opaque and nonopaque area of that enclosing side.

EXTERIOR WALL COVERING. A material or assembly of materials applied on the exterior side of exterior walls for the purpose of providing a weather-resistive barrier, insulation or for aesthetics, including but not limited to, veneers, siding, exterior insulation and finish systems, architectural trim and embellishments such as cornices, soffits, and fascias.

FAMILY. (HCD 1) An individual or two or more persons who are related by blood or marriage; or otherwise live together in a dwelling unit.

FACING. The wood structural panel facings that form the two outmost rigid layers of the structural insulated panel.

FENESTRATION. See "Fenestration Product" as defined in Title 24, Part 6, the California Energy Code.

FIBER-CEMENT SIDING. A manufactured, fiber-reinforcing product made with an inorganic hydraulic or calcium silicate binder formed by chemical reaction and reinforced with discrete organic or inorganic nonasbestos fibers, or both. Additives which enhance manufacturing or product performance are permitted. Fiber-cement siding products have either smooth or textured faces and are intended for exterior wall and related applications.

FIREBLOCKING. Building materials or materials approved for use as fireblocking, installed to resist the free passage of flame to other areas of the building through concealed spaces.

FIREPLACE. An assembly consisting of a hearth and fire chamber of noncombustible material and provided with a chimney, for use with solid fuels.

Factory-built fireplace. A listed and labeled fireplace and chimney system composed of factory-made components, and assembled in the field in accordance with manufacturer's instructions and the conditions of the listing.

Masonry chimney. A field-constructed chimney composed of solid masonry units, bricks, stones or concrete.

Masonry fireplace. A field-constructed fireplace composed of solid masonry units, bricks, stones or concrete.

FIREPLACE STOVE. A free-standing, chimney-connected solid-fuel-burning heater designed to be operated with the fire chamber doors in either the open or closed position.

FIREPLACE THROAT. The opening between the top of the firebox and the smoke chamber.

FIRE-RETARDANT-TREATED WOOD. Pressure-treated lumber and plywood that exhibit reduced surface burning characteristics and resist propagation of fire.

Other means during manufacture. A process where the wood raw material is treated with a fire-retardant formulation while undergoing creation as a finished product.

Pressure process. A process for treating wood using an initial vacuum followed by the introduction of pressure above atmospheric.

FIRE SEPARATION DISTANCE. The distance measured from the building face to one of the following:

1. To the closest interior lot line; or
2. To the centerline of a street, an alley or public way; or
3. To an imaginary line between two buildings on the lot.

The distance shall be measured at a right angle from the face of the wall.

FLAME SPREAD. The propagation of flame over a surface.

FLAME SPREAD INDEX. A comparative measure, expressed as a dimensionless number, derived from visual measurements of the spread of flame versus time for a material tested in accordance with ASTM E 84 or UL 723.

FLIGHT. A continuous run of rectangular treads or winders or combination thereof from one landing to another.

FOAM BACKER BOARD. Foam plastic used in siding applications where the foam plastic is a component of the siding.

FOAM PLASTIC INSULATION. A plastic that is intentionally expanded by the use of a foaming agent to produce a reduced-density plastic containing voids consisting of open or closed cells distributed throughout the plastic for thermal insulating or acoustic purposes and that has a density less than 20 pounds per cubic foot (320 kg/m^3) unless it is used as interior trim.

FOAM PLASTIC INTERIOR TRIM. Exposed foam plastic used as picture molds, chair rails, crown moldings, baseboards, handrails, ceiling beams, door trim and window trim and similar decorative or protective materials used in fixed applications.

FULL-TIME CARE shall mean the establishment and routine care of persons on an hourly, daily, weekly, monthly, yearly or permanent basis, whether for 24-hours per day or less, and where sleeping accommodations are provided.

GLAZING AREA. The interior surface area of all glazed fenestration, including the area of sash, curbing or other framing elements, that enclose conditioned space. Includes the area of glazed fenestration assemblies in walls bounding conditioned basements.

GRADE. The finished ground level adjoining the building at all exterior walls.

GRADE FLOOR OPENING. A window or other opening located such that the sill height of the opening is not more than 44 inches (1118 mm) above or below the finished ground level adjacent to the opening.

GRADE PLANE. A reference plane representing the average of the finished ground level adjoining the building at all exterior walls. Where the finished ground level slopes away from the exterior walls, the reference plane shall be established by the lowest points within the area between the building and the lot line or, where the lot line is more than 6 feet (1829 mm) from the building between the structure and a point 6 feet (1829 mm) from the building.

GROSS AREA OF EXTERIOR WALLS. The normal projection of all exterior walls, including the area of all windows and doors installed therein.

GUARD *OR GUARDRAIL.* A building component or a system of building components located near the open sides of elevated walking surfaces that minimizes the possibility of a fall from the walking surface to the lower level.

GUESTROOM. Any room or rooms used or intended to be used by one or more guests for living or sleeping purposes.

HABITABLE SPACE. A space in a building for living, sleeping, eating or cooking. Bathrooms, toilet rooms, closets, halls, storage or utility spaces and similar areas are not considered habitable spaces.

HANDRAIL. A horizontal or sloping rail intended for grasping by the hand for guidance or support.

HEIGHT, BUILDING. The vertical distance from grade plane to the average height of the highest roof surface.

HEIGHT, STORY. The vertical distance from top to top of two successive tiers of beams or finished floor surfaces; and, for the topmost story, from the top of the floor finish to the top of the ceiling joists or, where there is not a ceiling, to the top of the roof rafters.

HILL. With respect to topographic wind effects, a land surface characterized by strong relief in any horizontal direction.

HURRICANE-PRONE REGIONS. Areas vulnerable to hurricanes, defined as the U.S. Atlantic Ocean and Gulf of Mexico coasts where the basic wind speed is greater than 90 miles per hour (40 m/s), and Hawaii, Puerto Rico, Guam, Virgin Islands, and America Samoa.

INFANT, for the purpose of these regulations, shall mean any child who because of age only, is unable to walk and requires the aid of another person to evacuate the building. In no case shall the term "infant" mean a child 2 years of age or older.

INSULATING CONCRETE FORM (ICF). A concrete forming system using stay-in-place forms of rigid foam plastic insulation, a hybrid of cement and foam insulation, a hybrid of cement and wood chips, or other insulating material for constructing cast-in-place concrete walls.

INSULATING SHEATHING. An insulating board having a minimum thermal resistance of R-2 of the core material.

JURISDICTION. The governmental unit that has adopted this code under due legislative authority.

KITCHEN. Kitchen shall mean an area used, or designated to be used, for the preparation of food.

LABEL. An identification applied on a product by the manufacturer which contains the name of the manufacturer, the function and performance characteristics of the product or material, and the name and identification of an approved agency and that indicates that the representative sample of the product or material has been tested and evaluated by an approved agency. (See also "Manufacturer's designation" and "Mark.")

LABELED. (HCD 1) Labeled means equipment or materials to which has been attached a label, symbol or other identifying mark of an organization, approved by the Department, that maintains a periodic inspection program of production of labeled products, installations, equipment or materials and by whose labeling the manufacturer indicates compliance with appropriate standards or performance in a specified manner.

LIGHT-FRAME CONSTRUCTION. A type of construction whose vertical and horizontal structural elements are primarily formed by a system of repetitive wood or cold-formed steel framing members.

LIMITED-DENSITY OWNER-BUILT RURAL DWELLINGS. *Any structure consisting of one or more habitable rooms intended or designed to be occupied by one family with facilities for living or sleeping, with use restricted to rural areas designated by local jurisdiction. Notwithstanding other sections of law, the applicable section of Health and Safety Code Section 17958.2 is repeated here for clarification purposes.*

Section 17958.2. *(a) Notwithstanding Section 17958, regulations of the department adopted for limited-density owner-built rural dwellings, which are codified in Article 8 (commencing with Section 74) of Subchapter 1 of Chapter 1 of Title 25 of the California Code of Regulations, shall not become operative within any city or county unless and until the governing body of the city or county makes an express finding that the application of those regulations within the city or county is reasonably necessary because of local conditions and the city or county files a copy of that finding with the department.*

(b) In adopting ordinances or regulations for limited-density owner-built rural dwellings, a city or county may make such changes or modifications in the requirements contained in Article 8 (commencing with Section 74) of Subchapter 1 of Chapter 1 of Title 25 of the California Code of Regulations that it determines are reasonably necessary because of local conditions, if the city or county files a copy of the changes or modifications and the express findings for the changes or modifications with the department. No change or modification of that type shall become effective or operative for any purpose until the finding and the change or modification has been filed with the department.

LISTED. (HCD 1) *All products that appear in a list published by an approved testing or listing agency. For additional information, see Health and Safety Code Section 17920(h). For applications listed in Section 1.11 regulated by the Office of the State Fire Marshal, "listed" shall also mean equipment or materials accepted by the state fire marshal as conforming to the provisions of the State Fire Marshal's regulations and which are included in a list published by the State Fire Marshal.*

LISTED AGENCY. *An agency approved by the department that is in the business of listing and labeling products, materials, equipment and installations tested by an approved testing agency, and that maintains a periodic inspection program on current production of listed products, equipment and installations, and that, at least annually, makes available a published report of these listings. For additional information, see Health and Safety Code Section 17920(i).*

LIVE LOADS. Those loads produced by the use and occupancy of the building or other structure and do not include construction or environmental loads such as wind load, snow load, rain load, earthquake load, flood load or dead load.

LIVING SPACE. Space within a dwelling unit utilized for living, sleeping, eating, cooking, bathing, washing and sanitation purposes.

LOCAL EXHAUST. An exhaust system that uses one or more fans to exhaust air from a specific room or rooms within a dwelling.

LODGING HOUSE. *Any building or portion thereof containing not more than five guest rooms where rent is paid in money, goods, labor or otherwise.*

LOT. A portion or parcel of land considered as a unit.

LOT LINE. A line dividing one lot from another, or from a street or any public place.

MANUFACTURER'S DESIGNATION. An identification applied on a product by the manufacturer indicating that a product or material complies with a specified standard or set of rules. (See also "Mark" and "Label.")

MANUFACTURER'S INSTALLATION INSTRUCTIONS. Printed instructions included with equipment as part of the conditions of listing and labeling.

MARK. An identification applied on a product by the manufacturer indicating the name of the manufacturer and the function of a product or material. (See also "Manufacturer's designation" and "Label.")

MASONRY CHIMNEY. A field-constructed chimney composed of solid masonry units, bricks, stones or concrete.

MASONRY HEATER. A masonry heater is a solid fuel burning heating appliance constructed predominantly of concrete or solid masonry having a mass of at least 1,100 pounds (500 kg), excluding the chimney and foundation. It is designed to absorb and store a substantial portion of heat from a fire built in the firebox by routing exhaust gases through internal heat exchange channels in which the flow path downstream of the firebox includes at least one 180-degree (3.14-rad) change in flow direction before entering the chimney and which deliver heat by radiation through the masonry surface of the heater.

MASONRY, SOLID. Masonry consisting of solid masonry units laid contiguously with the joints between the units filled with mortar.

MASONRY UNIT. Brick, tile, stone, glass block or concrete block conforming to the requirements specified in Section 2103 of the *California Building Code*.

Clay. A building unit larger in size than a brick, composed of burned clay, shale, fire clay or mixtures thereof.

Concrete. A building unit or block larger in size than 12 inches by 4 inches by 4 inches (305 mm by 102 mm by 102 mm) made of cement and suitable aggregates.

Glass. Nonload-bearing masonry composed of glass units bonded by mortar.

Hollow. A masonry unit whose net cross-sectional area in any plane parallel to the loadbearing surface is less than 75 percent of its gross cross-sectional area measured in the same plane.

Solid. A masonry unit whose net cross-sectional area in every plane parallel to the loadbearing surface is 75 percent or more of its cross-sectional area measured in the same plane.

MEAN ROOF HEIGHT. The average of the roof eave height and the height to the highest point on the roof surface, except that eave height shall be used for roof angle of less than or equal to 10 degrees (0.18 rad).

MENTALLY RETARDED PERSONS, PROFOUNDLY OR SEVERELY, *shall mean any retarded person who is unable to evacuate a building unassisted during emergency conditions.*

Note: The determination as to such incapacity shall be made by the Director of the State Department of Public Health or his or her designated representative pursuant to Health and Safety Code Section 13131.3.

METAL ROOF PANEL. An interlocking metal sheet having a minimum installed weather exposure of at least 3 square feet (0.28 m^2) per sheet.

METAL ROOF SHINGLE. An interlocking metal sheet having an installed weather exposure less than 3 square feet (0.28 m^2) per sheet.

MEZZANINE, LOFT. An intermediate level or levels between the floor and ceiling of any story with an aggregate floor area of not more than one-third of the area of the room or space in which the level or levels are located.

MODIFIED BITUMEN ROOF COVERING. One or more layers of polymer modified asphalt sheets. The sheet materials shall be fully adhered or mechanically attached to the substrate or held in place with an approved ballast layer.

MULTIPLE STATION SMOKE ALARM. Two or more single station alarm devices that are capable of interconnection such that actuation of one causes all integral or separate audible alarms to operate.

NATURALLY DURABLE WOOD. The heartwood of the following species with the exception that an occasional piece with corner sapwood is permitted if 90 percent or more of the width of each side on which it occurs is heartwood.

Decay resistant. Redwood, cedar, black locust and black walnut.

Termite resistant. Alaska yellow cedar, redwood, Eastern red cedar and Western red cedar including all sapwood of Western red cedar.

NONAMBULATORY PERSONS *are persons unable to leave a building unassisted under emergency conditions. It includes, but is not limited to, persons who depend on mechanical aids such as crutches, walkers and wheelchairs and any person who is unable to physically and mentally respond to a sensory signal approved by the state fire marshal or an oral instruction relating to fire danger.*

The determination of ambulatory or nonambulatory status of persons with developmental disabilities shall be made by the Director of Social Services or his or her designated representative, in consultation with the director of Developmental Services or his or her designated representative. The determination of ambulatory or nonambulatory status of all other disabled persons placed after January 1, 1984, who are not developmentally disabled shall be made by the Director of Social Services or his or her designated representative.

NONCOMBUSTIBLE MATERIAL. *Noncombustible as applied to building construction material means a material which, in the form in which it is used, is either one of the following:*

1. *Material of which no part will ignite and burn when subjected to fire. Any material passing ASTM E 136 shall be considered noncombustible.*
2. *Material having a structural base of noncombustible material as defined in Item 1 above, with a surfacing material not over $^1/_8$ inch (3.2 mm) thick which has a flame-spread index of 50 or less.*

"Noncombustible" does not apply to surface finish materials. Material required to be noncombustible for reduced clearances to flues, heating appliances or other sources of high temperature shall refer to material conforming to Item 1. No material shall be classed as noncombustible which is subject to increase in combustibility or flame-spread index, beyond the limits herein established, through the effects of age, moisture or other atmospheric condition.

NOSING. The leading edge of treads of stairs and of landings at the top of stairway flights.

OCCUPIED SPACE. The total area of all buildings or structures on any lot or parcel of ground projected on a horizontal plane, excluding permitted projections as allowed by this code.

OWNER. Any person, agent, firm or corporation having a legal or equitable interest in the property.

PAN FLASHING. Corrosion-resistant flashing at the base of an opening that is integrated into the building exterior wall to direct water to the exterior and is premanufactured, fabricated, formed or applied at the job site.

PANEL THICKNESS. Thickness of core plus two layers of structural wood panel facings.

PASSIVE SOLAR ENERGY COLLECTOR. *Uses architectural components, rather than mechanical components, to provide heating or cooling for a building interior.*

PERFORMANCE CATEGORY. A designation of wood structural panels as related to the panel performance used in Chapters 4, 5, 6 and 8.

PERMIT. An official document or certificate issued by the authority having jurisdiction that authorizes performance of a specified activity.

PERSON. An individual, heirs, executors, administrators or assigns, and also includes a firm, partnership or corporation, its or their successors or assigns, or the agent of any of the aforesaid.

PHOTOVOLTAIC MODULES/SHINGLES. A roof covering composed of flat-plate photovoltaic modules fabricated into shingles.

PLATFORM CONSTRUCTION. A method of construction by which floor framing bears on load bearing walls that are not continuous through the story levels or floor framing.

POSITIVE ROOF DRAINAGE. The drainage condition in which consideration has been made for all loading deflections

of the roof deck, and additional slope has been provided to ensure drainage of the roof within 48 hours of precipitation.

PRECAST CONCRETE. A structural concrete element cast elsewhere than its final position in the structure.

PRECAST CONCRETE FOUNDATION WALLS. Preengineered, precast concrete wall panels that are designed to withstand specified stresses and used to build below-grade foundations.

PROTECTIVE SOCIAL CARE FACILITY. *A facility housing persons, who are referred, placed or caused to be placed in the facility, by any governmental agency and for whom the services, or a portion thereof, are paid for by any governmental agency. These occupancies shall include, but are not limited to, those commonly referred to as "assisted living facilities," "social rehabilitation facilities," "certified family care homes," "out-of-home placement facilities" and "halfway houses."*

PUBLIC WAY. Any street, alley or other parcel of land open to the outside air leading to a public street, which has been deeded, dedicated or otherwise permanently appropriated to the public for public use and that has a clear width and height of not less than 10 feet (3048 mm).

RAMP. A walking surface that has a running slope steeper than 1 unit vertical in 20 units horizontal (5-percent slope).

REGISTERED DESIGN PROFESSIONAL. An individual who is registered or licensed to practice their respective design profession as defined by the statutory requirements of the professional registration laws of the state or jurisdiction in which the project is to be constructed.

REPAIR. The reconstruction or renewal of any part of an existing building for the purpose of its maintenance.

REROOFING. The process of recovering or replacing an existing roof covering. See "Roof recover."

RESIDENTIAL CARE FACILITY FOR THE CHRONICALLY ILL (RCF/CI), *as termed, means a housing arrangement with a maximum capacity of 25 residents that provides a range of services to residents who have chronic, life-threatening illnesses.*

RESIDENTIAL CARE FACILITY FOR THE ELDERLY (RCFE), *as defined in Health and Safety Code Section 1569.2, shall mean a facility with a housing arrangement chosen voluntarily by persons 60 years of age or over, or their authorized representative, where varying levels and intensities of care and supervision, protective supervision or personal care are provided, based on their varying needs, as determined in order to be admitted and to remain in the facility. Persons under 60 years of age with compatible needs, as determined by the Department of Social Services in regulations, may be allowed to be admitted or retained in a residential-care facility for the elderly. Pursuant to Health and Safety Code Section 13133, regulations of the State Fire Marshal pertaining to Group R, Division 2 Occupancies classified as Residential Facilities (RF) and Residential-care Facilities for the Elderly (RCFE) shall apply uniformly throughout the state and no city, county, city and county, including a charter city or charter county, or fire protection district shall adopt or enforce any ordinance or local rule or regulation relating to fire and panic safety which is in consistent with these regulations. A city, county, city and county, including a charter city or charter county may pursuant to Health and Safety Code Section 13143.5, or a fire protection district may pursuant to Health and Safety Code Section 13869.7, adopt standards more stringent than those adopted by the State Fire Marshal that are reasonably necessary to accommodate local climate, geological or topographical conditions relating to roof coverings for Residential-care Facilities for the Elderly.*

RESIDENTIAL FACILITY (RF), *as defined in Section 1502 of the Health and Safety Code, shall mean any family home, group care facility or similar facility determined by the director of Social Services, for 24-hour nonmedical care of persons in need of personal services, supervision, or assistance essential for sustaining the activities of daily living or for the protection of the individual. Such facilities include small family homes and social rehabilitation facilities. Pursuant to Health and Safety Code Section 13133, regulations of the State Fire Marshal pertaining to Group R Occupancies classified as Residential Facilities (RF) and Residential-care Facilities for the Elderly (RCFE) shall apply uniformly throughout the state and no city, county, city and county, including a charter city or charter county, or fire protection district shall adopt or enforce any ordinance or local rule or regulation relating to fire and panic safety which is in consistent with these regulations. A city, county, city and county, including a charter city or charter county may pursuant to Health and Safety Code Section 13143.5, or a fire protection district may pursuant to Health and Safety Code Section 13869.7, adopt standards more stringent than those adopted by the State Fire Marshal that are reasonably necessary to accommodate local climate, geological or topographical conditions relating to roof coverings for Residential-care Facilities for the Elderly.*

RESTRAINT. *The physical retention of a person within a room, cell or cell block by any means, or within the exterior walls of a building by means of locked doors inoperable by the person restrained. Restraint shall also mean the physical binding, strapping or similar restriction of any person in a chair, walker, bed or other contrivance for the purpose of deliberately restricting the free movement of ambulatory persons. Restraint shall not be construed to include nonambulatory persons nor shall it include the use of bandage material, strip sheeting or other fabrics or materials (soft ties) used to restrain persons in hospital-type beds or wheelchairs to prevent injury, provided an approved method of quick release is maintained. Facilities employing the use of soft ties, however, shall be classified as a building used to house nonambulatory persons. Restraint shall not be practiced in licensed facilities classified as Group I-1, R-3.1 and R-4 occupancies unless constructed as a Group I-3 occupancy. For Group I-3 Occupancies see Section 308.4 of the California Building Code.*

RIDGE. With respect to topographic wind effects, an elongated crest of a hill characterized by strong relief in two directions.

RISER. The vertical component of a step or stair.

3712

ROOF ASSEMBLY. A system designed to provide weather protection and resistance to design loads. The system consists of a roof covering and roof deck or a single component serving as both the roof covering and the roof deck. A roof assembly includes the roof deck, vapor retarder, substrate or thermal barrier, insulation, vapor retarder, and roof covering.

ROOF COVERING. The covering applied to the roof deck for weather resistance, fire classification or appearance.

ROOF COVERING SYSTEM. See "Roof assembly."

ROOF DECK. The flat or sloped surface not including its supporting members or vertical supports.

ROOF RECOVER. The process of installing an additional roof covering over a prepared existing roof covering without removing the existing roof covering.

ROOF REPAIR. Reconstruction or renewal of any part of an existing roof for the purposes of its maintenance.

ROOFTOP STRUCTURE. An enclosed structure on or above the roof of any part of a building.

RUNNING BOND. The placement of masonry units such that head joints in successive courses are horizontally offset at least one-quarter the unit length.

SCUPPER. An opening in a wall or parapet that allows water to drain from a roof.

SEISMIC DESIGN CATEGORY (SDC). A classification assigned to a structure based on its occupancy category and the severity of the design earthquake ground motion at the site.

SHALL. The term, when used in the code, is construed as mandatory.

SHEAR WALL. A general term for walls that are designed and constructed to resist racking from seismic and wind by use of masonry, concrete, cold-formed steel or wood framing in accordance with Chapter 6 of this code and the associated limitations in Section R301.2 of this code.

SINGLE PLY MEMBRANE. A roofing membrane that is field applied using one layer of membrane material (either homogeneous or composite) rather than multiple layers.

SINGLE STATION SMOKE ALARM. An assembly incorporating the detector, control equipment and alarm sounding device in one unit that is operated from a power supply either in the unit or obtained at the point of installation.

SKYLIGHT AND SLOPED GLAZING. See Section R308.6.1.

SKYLIGHT, UNIT. See Section R308.6.1.

SMOKE-DEVELOPED INDEX. A comparative measure, expressed as a dimensionless number, derived from measurements of smoke obscuration versus time for a material tested in accordance with ASTM E 84 or UL 723.

SOLID MASONRY. Load-bearing or nonload-bearing construction using masonry units where the net cross-sectional area of each unit in any plane parallel to the bearing surface is not less than 75 percent of its gross cross-sectional area. Solid masonry units shall conform to ASTM C 55, C 62, C 73, C 145 or C 216.

SPLINE. A strip of wood structural panel cut from the same material used for the panel facings, used to connect two structural insulated panels. The strip (spline) fits into a groove cut into the vertical edges of the two structural insulated panels to be joined. Splines are used behind each facing of the structural insulated panels being connected as shown in Figure R613.8.

STACK BOND. The placement of masonry units in a bond pattern is such that head joints in successive courses are vertically aligned. For the purpose of this code, requirements for stack bond shall apply to all masonry laid in other than running bond.

STAIR. A change in elevation, consisting of one or more risers.

STAIRWAY. One or more flights of stairs, either interior or exterior, with the necessary landings and platforms connecting them to form a continuous and uninterrupted passage from one level to another within or attached to a building, porch or deck.

STATE-OWNED/LEASED BUILDING. *A building or portion of a building that is owned, leased or rented by the state. State-leased buildings shall include all required exits to a public way serving such leased area or space. Portions of state leased buildings that are not leased or rented by the state shall not be included within the scope of this section unless such portions present an exposure hazard to the state-leased area or space.*

STORY. That portion of a building included between the upper surface of a floor and the upper surface of the floor or roof next above.

STORY ABOVE GRADE PLANE. Any story having its finished floor surface entirely above grade plane, or in which the finished surface of the floor next above is:

1. More than 6 feet (1829 mm) above grade plane; or
2. More than 12 feet (3658 mm) above the finished ground level at any point.

STRUCTURAL COMPOSITE LUMBER. Structural members manufactured using wood elements bonded together with exterior adhesives.

Examples of structural composite lumber are:

Laminated veneer lumber (LVL). A composite of wood veneer elements with wood fibers primarily oriented along the length of the member, where the veneer element thicknesses are 0.25 inches (6.4 mm) or less.

Parallel strand lumber (PSL). A composite of wood strand elements with wood fibers primarily oriented along the length of the member, where the least dimension of the wood strand elements is 0.25 inch (6.4 mm) or less and their average lengths are a minimum of 300 times the least dimension of the wood strand elements.

Laminated strand lumber (LSL). A composite of wood strand elements with wood fibers primarily oriented along the length of the member, where the least dimension of the

wood strand elements is 0.10 inch (2.54 mm) or less and their average lengths are a minimum of 150 times the least dimension of the wood strand elements.

Oriented strand lumber (OSL). A composite of wood strand elements with wood fibers primarily oriented along the length of the member, where the least dimension of the wood strand elements is 0.10 inch (2.54 mm) or less and their average lengths are a minimum of 75 times and less than 150 times the least dimension of the wood strand elements.

STRUCTURAL INSULATED PANEL (SIP). A structural sandwich panel that consists of a light-weight foam plastic core securely laminated between two thin, rigid wood structural panel facings.

STRUCTURE. That which is built or constructed.

SUNROOM. A one-story structure attached to a dwelling with a glazing area in excess of 40 percent of the gross area of the structure's exterior walls and roof.

SUPPORTS. Devices for supporting, hanging and securing pipes, fixtures and equipment.

TERMINALLY ILL, as termed for an individual, means the individual has a life expectancy of six months or less as stated in writing by his or her attending physician and surgeon.

TERMITE-RESISTANT MATERIAL. Pressure-preservative treated wood in accordance with the AWPA standards in Section R318.1, naturally durable termite-resistant wood, steel, concrete, masonry or other approved material.

TESTING AGENCY. An agency approved by the department as qualified and equipped for testing of products, materials, equipment and installations in accordance with nationally recognized standards. For additional information, see Health and Safety Code Section 17920(m).

TOWNHOUSE. A single-family dwelling unit constructed in a group of three or more attached units in which each unit extends from foundation to roof and with a yard or public way on at least two sides.

TRIM. Picture molds, chair rails, baseboards, handrails, door and window frames, and similar decorative or protective materials used in fixed applications.

TRUSS DESIGN DRAWING. The graphic depiction of an individual truss, which describes the design and physical characteristics of the truss.

UNDERLAYMENT. One or more layers of felt, sheathing paper, nonbituminous saturated felt, or other approved material over which a roof covering, with a slope of 2 to 12 (17-percent slope) or greater, is applied.

VAPOR PERMEABLE. The property of having a moisture vapor permeance rating of 5 perms (2.9×10^{-10} kg/Pa · s · m^2) or greater, when tested in accordance with the desiccant method using Procedure A of ASTM E 96. A vapor permeable material permits the passage of moisture vapor.

VAPOR RETARDER CLASS. A measure of the ability of a material or assembly to limit the amount of moisture that passes through that material or assembly. Vapor retarder class shall be defined using the desiccant method with Procedure A of ASTM E 96 as follows:

Class I: 0.1 perm or less

Class II: 0.1 < perm ≤ 1.0 perm

Class III: 1.0 < perm ≤ 10 perm

VENTILATION. The natural or mechanical process of supplying conditioned or unconditioned air to, or removing such air from, any space.

VENTING. Removal of combustion products to the outdoors.

VINYL SIDING. A shaped material, made principally from rigid polyvinyl chloride (PVC), that is used to cover exterior walls of buildings.

WALL, RETAINING. A wall not laterally supported at the top, that resists lateral soil load and other imposed loads.

WALLS. Walls shall be defined as follows:

Load-bearing wall. A wall supporting any vertical load in addition to its own weight.

Nonbearing wall. A wall which does not support vertical loads other than its own weight.

WATER-RESISTIVE BARRIER. A material behind an exterior wall covering that is intended to resist liquid water that has penetrated behind the exterior covering from further intruding into the exterior wall assembly.

WIND-BORNE DEBRIS REGION. Areas within hurricane-prone regions as designated in accordance with Figure R301.2(4)C.

WINDER. A tread with nonparallel edges.

WOOD/PLASTIC COMPOSITE. A composite material made primarily from wood or cellulose-based materials and plastic.

WOOD STRUCTURAL PANEL. A panel manufactured from veneers; or wood strands or wafers; bonded together with waterproof synthetic resins or other suitable bonding systems. Examples of wood structural panels are plywood, OSB or composite panels.

YARD. An open space, other than a court, unobstructed from the ground to the sky, except where specifically provided by this code, on the lot on which a building is situated.

CALIFORNIA FIRE CODE – MATRIX ADOPTION TABLE
CHAPTER 3 – BUILDING PLANNING

(Matrix Adoption Tables are non-regulatory, intended only as an aid to the user.
See Chapter 1 for state agency authority and building applications.)

Adopting agency	BSC	SFM	HCD			DSA		OSHPD				BSCC	DHS	AGR	DWR	CEC	CA	SL	SLC
			1	2	1/AC	AC	SS	1	2	3	4								
Adopt entire chapter																			
Adopt entire chapter as amended (amended sections listed below)			X																
Adopt only those sections that are listed below		X																	
Chapter / Section																			
R300			*X*																
R300.1			*X*																
R300.2			*X*																
R301.1		X																	
R301.1.1			X	X															
R301.1.1.1			X																
R301.1.3			X	X															
R301.1.3.1			X																
R301.1.3.2			X																
R301.1.3.3			X																
Table R301.2(1)			X																
R301.2.2.1.1			X	X															
R301.2.2.1.2			X	X															
R301.2.2.3.7			X																
R301.2.2.4			X	X															
R301.3			X	X															
R302.2		X	X																
R302.5.1		X	X																
R302.6		X	X																
Table R302.6		X																	
R302.9.4		X																	
R302.9.5		X																	
R302.13		X	X																
R303.1			X																
R303.3			X																
R303.3.1			*X*																
R303.4			*X*																
R303.6		X																	
R303.6.1		X																	
R303.8		X	X																
R303.8.1		X																	
R303.8.1.1			X																
R303.9		X	X																
R304.1		X																	
R304.2		X																	
R304.3		X	X																
R304.4		X																	
R304.5			X																
R305.1		X	X																
R305.1.1		X																	
R306.1		X																	
R307.1			X																
Figure R307.1			†																
R308.3 through R308.4		X																	

(continued)

CALIFORNIA FIRE CODE – MATRIX ADOPTION TABLE
CHAPTER 3 – BUILDING PLANNING—continued

Adopting Agency	BSC	SFM	HCD			DSA		OSHPD				BSCC	DHS	AGR	DWR	CEC	CA	SL	SLC
			1	2	1/AC	AC	SS	1	2	3	4								
Adopt Entire Chapter																			
Adopt Entire Chapter as amended (amended sections listed below)			X	X															
Adopt only those sections that are listed below		X																	
Chapter / Section																			
R308.5			X	X															
R309.4			X																
R309.7			X																
R309.6		X																	
R310.1			X																
R310 through R310.4		X																	
R311 through R31108.3.3		X																	
R312.1.2		X	X																
R312.3		X																	
R312.4		X																	
R313.1		X																	
R313.3 through R313.3.8.2		X																	
R314 through R314.6.3		X																	
R315.1			X																
R315.1.1			X																
R315.1.2			X																
R315.1.3			X																
R315.1.4			X																
R315.1.5			X																
R315.2			X																
R315.2.1			X																
R315.2.2			X																
R315.2.3			X																
R315.2.3.1			X																
R315.2.3.2			X																
R315.2.4			X																
R315.2.5			X																
R315.2.6			X																
R316.3 through R316.4		X																	
R316.5.8 through R316.5.11		X																	
R319		X																	
R320.1			X																
R321.3			X																
R322.1.6			X																
R322.1.7			X																
R322.1.9			†																
R324			X																
R324.1			X																
R325 through R325.8		X	X																
R326 through R326.8		X																	
R327 through R327.10.4		X																	
R328 through R328.4		X																	
R330			X																
R330.1			X																

The † designation indicates that the State Fire Marshal's adoption of this chapter or individual section is applicable to structures subject to HCD1.

Part III—Building Planning and Construction

CHAPTER 3

BUILDING PLANNING

SECTION R300
SITE DRAINAGE

R300.1 Storm water drainage and retention during construction. *Projects which disturb less than one acre of soil and are not part of a larger common plan of development which in total disturbs one acre or more, shall manage storm water drainage during construction in accordance with the California Green Building Standards Code, Chapter 4, Division 4.1.*

R300.2 Grading and paving. *Construction plans shall indicate how the site grading or drainage system will manage all surface water flows to keep water from entering buildings in accordance with the California Green Building Standards Code, Chapter 4, Division 4.1.*

SECTION R301
DESIGN CRITERIA

R301.1 Application. Buildings and structures, and all parts thereof, shall be constructed to safely support all loads, including dead loads, live loads, roof loads, flood loads, snow loads, wind loads and seismic loads as prescribed by this code. The construction of buildings and structures in accordance with the provisions of this code shall result in a system that provides a complete load path that meets all requirements for the transfer of all loads from their point of origin through the load-resisting elements to the foundation. Buildings and structures constructed as prescribed by this code are deemed to comply with the requirements of this section.

Existing buildings housing existing protective social care homes or facilities established prior to 1972 (see Section 3413 of the California Building Code).

R301.1.1 Alternative provisions. As an alternative to the requirements in Section R301.1 the following standards are permitted subject to the limitations of this code and the limitations therein. Where engineered design is used in conjunction with these standards, the design shall comply with the *California Building Code.*

1. AF&PA *Wood Frame Construction Manual* (WFCM).
2. AISI *Standard for Cold-Formed Steel Framing—Prescriptive Method for One- and Two-Family Dwellings* (AISI S230).
3. ICC *Standard on the Design and Construction of Log Structures* (ICC 400).

R301.1.1.1 Alternative provisions for limited-density owner-built rural dwellings. *The purpose of this subsection is to permit alternatives that provide minimum protection of life, limb, health, property, safety and welfare of the general public and the owners and occupants of limited-density owner-built rural dwellings as defined in Chapter 2 of this code. For additional information see Chapter 1, Subchapter 1, Article 8, of Title 25, California Code of Regulations, commencing with Section 74.*

To meet compliance with the requirements of this code, provisions of Section R301.1.1.1, Items 1 though 5 may be utilized for limited-density owner-built rural dwellings when the materials, methods of construction, or appliances are determined appropriate or suitable for their intended purpose by the local enforcing agency.

1. *A limited-density owner-built rural dwelling may be of any type of construction which will provide for a sound structural condition. Structural hazards which result in an unsound condition and which may constitute a substandard building are delineated in Section 17920.3 of the Health and Safety Code.*
2. *There shall be no requirements for room dimensions as required in Chapter 3, provided there is adequate light and ventilation and means of egress.*
3. *There shall be no specified requirement for heating capacity or for temperature maintenance. The use of solid-fuel or solar heating devices shall be deemed as complying with the requirements of Chapter 3. If nonrenewable fuel is used in these dwellings, rooms so heated shall meet current installation standards.*
4. *Pier foundations, stone masonry footings and foundations, pressure-treated lumber, poles or equivalent foundation materials or designs may be used provided that bearing is sufficient.*
5. *Owner-produced or used materials and appliances may be utilized unless found not to be of sufficient strength or durability to perform the intended function. Owner-produced or used lumber, or shakes and shingles may be utilized unless found to contain dry rot, excessive splitting or other defects obviously rendering the material unfit in strength or durability for the intended purpose.*

R301.1.2 Construction systems. The requirements of this code are based on platform and balloon-frame construction for light-frame buildings. The requirements for concrete and masonry buildings are based on a balloon framing system. Other framing systems must have equivalent detailing to ensure force transfer, continuity and compatible deformations.

R301.1.3 Engineered design. When a building of otherwise conventional construction contains structural elements exceeding the limits of Section R301 or otherwise not conforming to this code, these elements shall be designed in accordance with accepted engineering practice. The extent of such design need only demonstrate compliance of nonconventional elements with other applicable provisions and shall be compatible with the performance of the conventional framed system. Engineered design in accordance with the *California Building Code* is permitted for all buildings and structures, and parts thereof, included in the scope of this code.

R301.1.3.1 California licensed architect or engineer. *When any portion of any structure deviates from substantial compliance with conventional framing requirements for woodframe construction found in this code, the building official shall require the construction documents to be approved and stamped by a California licensed architect or engineer for that irregular or nonconforming portion of work. Notwithstanding other sections of law, the law establishing these provisions is found in Business and Professions Code Sections 5537 and 6737.1.*

R301.1.3.2 Woodframe structures greater than two-stories. *The building official shall require construction documents to be approved and stamped by a California licensed architect or engineer for all dwellings of woodframe construction more than two stories and basement in height. Notwithstanding other sections of law, the law establishing these provisions is found in Business and Professions Code Sections 5537 and 6737.1.*

R301.1.3.3 Structures other than woodframe. *The building official shall require floor, wall or roof-ceiling structural elements in dwellings designed of cold-formed steel, concrete, masonry or structural insulated panels prescribed by this code to be approved and stamped by a California licensed architect or engineer. Notwithstanding other sections of law, the law establishing these provisions is found in Business and Professions Code Sections 5537 and 6737.1.*

R301.2 Climatic and geographic design criteria. Buildings shall be constructed in accordance with the provisions of this code as limited by the provisions of this section. Additional criteria shall be established by the local jurisdiction and set forth in Table R301.2(1).

TABLE R301.2(1)
CLIMATIC AND GEOGRAPHIC DESIGN CRITERIA

GROUND SNOW LOAD	WIND DESIGN		SEISMIC DESIGN CATEGORY[f]	SUBJECT TO DAMAGE FROM			WINTER DESIGN TEMP[e]	ICE BARRIER UNDERLAYMENT REQUIRED[h]	FLOOD HAZARDS[g]	AIR FREEZING INDEX[i]	MEAN ANNUAL TEMP[j]
	Speed[d] (mph)	Topographic effects[k]		Weathering[a]	Frost line depth[b]	Termite[c]					

For SI: 1 pound per square foot = 0.0479 kPa, 1 mile per hour = 0.447 m/s.

a. Weathering may require a higher strength concrete or grade of masonry than necessary to satisfy the structural requirements of this code. The weathering column shall be filled in with the weathering index (i.e., "negligible," "moderate" or "severe") for concrete as determined from the Weathering Probability Map [Figure R301.2(3)]. The grade of masonry units shall be determined from ASTM C 34, C 55, C 62, C 73, C 90, C 129, C 145, C 216 or C 652.

b. The frost line depth may require deeper footings than indicated in Figure R403.1(1). The jurisdiction shall fill in the frost line depth column with the minimum depth of footing below finish grade.

c. The jurisdiction shall fill in this part of the table to indicate the need for protection depending on whether there has been a history of local subterranean termite damage.

d. The jurisdiction shall fill in this part of the table with the wind speed from the basic wind speed map [Figure R301.2(4)A]. Wind exposure category shall be determined on a site-specific basis in accordance with Section R301.2.1.4.

e. Temperatures shall be permitted to reflect local climates or local weather experience as determined by the building official.

f. The jurisdiction shall fill in this part of the table with the seismic design category determined from Section R301.2.2.1.

g. The jurisdiction shall fill in this part of the table with (a) the date of the jurisdiction's entry into the National Flood Insurance Program (date of adoption of the first code or ordinance for management of flood hazard areas), (b) the date(s) of the Flood Insurance Study and (c) the panel numbers and dates of all currently effective FIRMs and FBFMs or other flood hazard map adopted by the authority having jurisdiction, as amended.

h. In accordance with Sections R905.2.7.1, R905.4.3.1, R905.5.3.1, R905.6.3.1, R905.7.3.1 and R905.8.3.1, where there has been a history of local damage from the effects of ice damming, the jurisdiction shall fill in this part of the table with "YES." Otherwise, the jurisdiction shall fill in this part of the table with "NO."

i. The jurisdiction shall fill in this part of the table with the 100-year return period air freezing index (BF-days) from Figure R403.3(2) or from the 100-year (99 percent) value on the National Climatic Data Center data table "Air Freezing Index-USA Method (Base 32°F)" at www.ncdc.noaa.gov/fpsf.html.

j. The jurisdiction shall fill in this part of the table with the mean annual temperature from the National Climatic Data Center data table "Air Freezing Index-USA Method (Base 32°F)" at www.ncdc.noaa.gov/fpsf.html.

k. In accordance with Section R301.2.1.5, where there is local historical data documenting structural damage to buildings due to topographic wind speed-up effects, the jurisdiction shall fill in this part of the table with "YES." Otherwise, the jurisdiction shall indicate "NO" in this part of the table.

TABLE R301.2(2)
COMPONENT AND CLADDING LOADS FOR A BUILDING WITH A MEAN ROOF HEIGHT OF 30 FEET LOCATED IN EXPOSURE B (psf)[a, b, c, d, e]

	ZONE	EFFECTIVE WIND AREA (feet²)	BASIC WIND SPEED (mph-3-second gust)																					
			85		90		100		105		110		120		125		130		140		145		150		170	
Roof > 0 to 10 degrees	1	10	10.0	-13.0	10.0	-14.6	10.0	-18.0	10.0	-19.8	10.0	-21.8	10.5	-25.9	11.4	-28.1	12.4	-30.4	14.3	-35.3	15.4	-37.8	16.5	-40.5	21.1	-52.0
	1	20	10.0	-12.7	10.0	-14.2	10.0	-17.5	10.0	-19.3	10.0	-21.2	10.0	-25.2	10.7	-27.4	11.6	-29.6	13.4	-34.4	14.4	-36.9	15.4	-39.4	19.8	-50.7
	1	50	10.0	-12.2	10.0	-13.7	10.0	-16.9	10.0	-18.7	10.0	-20.5	10.0	-24.4	10.0	-26.4	10.6	-28.6	12.3	-33.2	13.1	-35.6	14.1	-38.1	18.1	-48.9
	1	100	10.0	-11.9	10.0	-13.3	10.0	-18.5	10.0	-18.2	10.0	-19.9	10.0	-23.7	10.0	-25.7	10.0	-27.8	11.4	-32.3	12.2	-34.6	13.0	-37.0	16.7	-47.6
	2	10	10.0	-21.8	10.0	-24.4	10.0	-30.2	10.0	-33.3	10.0	-36.5	10.5	-43.5	11.4	-47.2	12.4	-51.0	14.3	-59.2	15.4	-63.5	16.5	-67.9	21.1	-87.2
	2	20	10.0	-19.5	10.0	-21.8	10.0	-27.0	10.0	-29.7	10.0	-32.6	10.0	-38.8	10.7	-42.1	11.6	-45.6	13.4	-52.9	14.4	-56.7	15.4	-60.7	19.8	-78.0
	2	50	10.0	-16.4	10.0	-18.4	10.0	-22.7	10.0	-25.1	10.0	-27.5	10.0	-32.7	10.0	-35.5	10.6	-38.4	12.3	-44.5	13.1	-47.8	14.1	-51.1	18.1	-65.7
	2	100	10.0	-14.1	10.0	-15.8	10.0	-19.5	10.0	-21.5	10.0	-23.6	10.0	-28.1	10.0	-30.5	10.0	-33.0	11.4	-38.2	12.2	-41.0	13.0	-43.9	16.7	-56.4
	3	10	10.0	-32.8	10.0	-36.8	10.0	-45.4	10.0	-50.1	10.0	-55.0	10.5	-65.4	11.4	-71.0	12.4	-76.8	14.3	-89.0	15.4	-95.5	16.5	102.2	21.1	131.3
	3	20	10.0	-27.2	10.0	-30.5	10.0	-37.6	10.0	-41.5	10.0	-45.5	10.0	-54.2	10.7	-58.8	11.6	-63.6	13.4	-73.8	14.4	-79.1	15.4	-84.7	19.8	108.7
	3	50	10.0	-19.7	10.0	-22.1	10.0	-27.3	10.0	-30.1	10.0	-33.1	10.0	-39.3	10.0	-42.7	10.6	-46.2	12.3	-53.5	13.1	-57.4	14.1	-61.5	18.1	-78.9
	3	100	10.0	-14.1	10.0	-15.8	10.0	-19.5	10.0	-21.5	10.0	-23.6	10.0	-28.1	10.0	-30.5	10.0	-33.0	11.4	-38.2	12.2	-41.0	13.0	-43.9	16.7	-56.4
Roof > 10 to 30 degrees	1	10	10.0	-11.9	10.0	-13.3	10.4	-16.5	11.4	-18.2	12.5	-19.9	14.9	-23.7	16.2	-25.7	17.5	-27.8	20.3	-32.3	21.8	-34.6	23.3	-37.0	30.0	-47.6
	1	20	10.0	-11.6	10.0	-13.0	10.0	-16.0	10.4	-17.6	11.4	-19.4	13.6	-23.0	14.8	-25.0	16.0	-27.0	18.5	-31.4	19.9	-33.7	21.3	-36.0	27.3	-46.3
	1	50	10.0	-11.1	10.0	-12.5	10.0	-15.4	10.0	-17.0	10.0	-18.6	11.9	-22.2	12.9	-24.1	13.9	-26.0	16.1	-30.2	17.3	-32.4	18.5	-34.6	23.8	-44.5
	1	100	10.0	-10.8	10.0	-12.1	10.0	-14.9	10.0	-16.5	10.0	-18.1	10.5	-21.5	11.4	-23.3	12.4	-25.2	14.3	-29.3	15.4	-31.4	16.5	-33.6	21.1	-43.2
	2	10	10.0	-25.1	10.0	-28.2	10.4	-34.8	11.4	-38.3	12.5	-42.1	14.9	-50.1	16.2	-54.3	17.5	-58.7	20.3	-68.1	21.8	-73.1	23.3	-78.2	30.0	100.5
	2	20	10.0	-22.8	10.0	-25.6	10.0	-31.5	10.4	-34.8	11.4	-38.2	13.6	-45.4	14.8	-49.3	16.0	-53.3	18.5	-61.8	19.9	-66.3	21.3	-71.0	27.3	-91.2
	2	50	10.0	-19.7	10.0	-22.1	10.0	-27.3	10.0	-30.1	10.0	-33.0	11.9	-39.3	12.9	-42.7	13.9	-46.1	16.1	-53.5	17.3	-57.4	18.5	-61.4	23.8	-78.9
	3	20	10.0	-22.8	10.0	-25.6	10.0	-31.5	10.4	-34.8	11.4	-38.2	13.6	-45.4	14.8	-49.3	16.0	-53.3	18.5	-61.8	19.9	-66.3	21.3	-71.0	27.3	-91.2
	3	50	10.0	-19.7	10.0	-22.1	10.0	-27.3	10.0	-30.1	10.0	-33.0	11.9	-39.3	12.9	-42.7	13.9	-46.1	16.1	-53.5	17.3	-57.4	18.5	-61.4	23.8	-78.9
	3	100	10.0	-17.4	10.0	-19.5	10.0	-24.1	10.0	-26.6	10.0	-29.1	10.5	-34.7	11.4	-37.6	12.4	-40.7	14.3	-47.2	15.4	-50.6	16.5	-54.2	21.1	-69.6
Roof > 30 to 45 degrees	1	10	11.9	-13.0	13.3	-14.6	16.5	-18.0	18.2	-19.8	19.9	-21.8	23.7	-25.9	25.7	-28.1	27.8	-30.4	32.3	-35.3	34.6	-37.8	37.0	-40.5	47.6	-52.0
	1	20	11.6	-12.3	13.0	-13.8	16.0	-17.1	17.6	-18.8	19.4	-20.7	23.0	-24.6	25.0	-26.7	27.0	-28.9	31.4	-33.5	33.7	-35.9	36.0	-38.4	46.3	-49.3
	1	50	11.1	-11.5	12.5	-12.8	15.4	-15.9	17.0	-17.5	18.6	-19.2	22.2	-22.8	24.1	-24.8	26.0	-25.8	30.2	-31.1	32.4	-33.3	34.6	-35.7	44.5	-45.8
	1	100	10.8	-10.8	12.1	-12.1	14.9	-14.9	16.5	-16.5	18.1	-18.1	21.5	-21.5	23.3	-23.3	25.2	-25.2	29.3	-29.3	31.4	-31.4	33.6	-33.6	43.2	-43.2
	2	10	11.9	-15.2	13.3	-17.0	16.5	-21.0	18.2	-23.2	19.9	-25.5	23.7	-30.3	25.7	-32.9	27.8	-35.6	32.3	-41.2	34.6	-44.2	37.0	-47.3	47.6	-60.8
	2	20	11.6	-14.5	13.0	-16.3	16.0	-20.1	17.6	-22.2	19.4	-24.3	23.0	-29.0	25.0	-31.4	27.0	-34.0	31.4	-39.4	33.7	-42.3	36.0	-45.3	46.3	-58.1
	2	50	11.1	-13.7	12.5	-15.3	15.4	-18.9	17.0	-20.8	18.6	-22.9	22.2	-27.2	24.1	-29.5	26.0	-32.0	30.2	-37.1	32.4	-39.8	34.6	-42.5	44.5	-54.6
	2	100	10.8	-13.0	12.1	-14.6	14.9	-18.0	16.5	-19.8	18.1	-21.8	21.5	-25.9	23.3	-28.1	25.2	-30.4	29.3	-35.3	31.4	-37.8	33.6	-40.5	43.2	-52.0
	3	10	11.9	-15.2	13.3	-17.0	16.5	-21.0	18.2	-23.2	19.9	-25.5	23.7	-30.3	25.7	-32.9	27.8	-35.6	32.3	-41.2	34.6	-44.2	37.0	-47.3	47.6	-60.8
	3	20	11.6	-14.5	13.0	-16.3	16.0	-20.1	17.6	-22.2	19.4	-24.3	23.0	-29.0	25.0	-31.4	27.0	-34.0	31.4	-39.4	33.7	-42.3	36.0	-45.3	46.3	-58.1
	3	50	11.1	-13.7	12.5	-15.3	15.4	-18.9	17.0	-20.8	18.6	-22.9	22.2	-27.2	24.1	-29.5	26.0	-32.0	30.2	-37.1	32.4	-39.8	34.6	-42.5	44.5	-54.5
	3	100	10.8	-13.0	12.1	-14.6	14.9	-18.0	16.5	-19.8	18.1	-21.8	21.5	-25.9	23.3	-28.1	25.2	-30.4	29.3	-35.3	31.4	-37.8	33.6	-40.5	43.2	-52.0
Wall	4	10	13.0	-14.1	14.6	-15.8	18.0	-19.5	19.8	-21.5	21.8	-23.6	25.9	-28.1	28.1	-30.5	30.4	-33.0	35.3	-38.2	37.8	-41.0	40.5	-43.9	52.0	-56.4
	4	20	12.4	-13.5	13.9	-15.1	17.2	-18.7	18.9	-20.6	20.8	-22.6	24.7	-26.9	26.8	-29.2	29.0	-31.6	33.7	-36.7	36.1	-39.3	38.7	-42.1	49.6	-54.1
	4	50	11.6	-12.7	13.0	-14.3	16.1	-17.6	17.8	-19.4	19.5	-21.3	23.2	-25.4	25.2	-27.5	27.2	-29.8	31.6	-34.6	33.9	-37.1	36.2	-39.7	46.6	-51.0
	4	100	11.1	-12.2	12.4	-13.6	15.3	-16.8	16.9	-18.5	18.5	-20.4	22.0	-24.2	23.9	-26.3	25.9	-28.4	30.0	-33.0	32.2	-35.4	34.4	-37.8	44.2	-48.6
	5	10	13.0	-17.4	14.6	-19.5	18.0	-24.1	19.8	-26.6	21.8	-29.1	25.9	-34.7	28.1	-37.6	30.4	-40.7	35.3	-47.2	37.8	-50.6	40.5	-54.2	52.0	-69.6
	5	20	12.4	-16.2	13.9	-18.2	17.2	-22.5	18.9	-24.8	20.8	-27.2	24.7	-32.4	26.8	-35.1	29.0	-38.0	33.7	-44.0	36.1	-47.2	38.7	-50.5	49.6	-64.9
	5	50	11.6	-14.7	13.0	-16.5	16.1	-20.3	17.8	-22.4	19.5	-24.6	23.2	-29.3	25.2	-31.8	27.2	-34.3	31.6	-39.8	33.9	-42.7	36.2	-45.7	46.6	-58.7
	5	100	11.1	-13.5	12.4	-15.1	15.3	-18.7	16.9	-20.6	18.5	-22.6	22.0	-26.9	23.9	-29.2	25.9	-31.6	30.0	-36.7	32.2	-39.3	34.4	-42.1	44.2	-54.1

For SI: 1 foot = 304.8 mm, 1 square foot = 0.0929 m², 1 mile per hour = 0.447 m/s, 1 pound per square foot = 0.0479 kPa.

a. The effective wind area shall be equal to the span length multiplied by an effective width. This width shall be permitted to be not be less than one-third the span length. For cladding fasteners, the effective wind area shall not be greater than the area that is tributary to an individual fastener.

b. For effective areas between those given above, the load may be interpolated; otherwise, use the load associated with the lower effective area.

c. Table values shall be adjusted for height and exposure by multiplying by the adjustment coefficient in Table R301.2(3).

d. See Figure R301.2(7) for location of zones.

e. Plus and minus signs signify pressures acting toward and away from the building surfaces.

TABLE R301.2(3)
HEIGHT AND EXPOSURE ADJUSTMENT COEFFICIENTS FOR TABLE R301.2(2)

MEAN ROOF HEIGHT	EXPOSURE		
	B	C	D
15	1.00	1.21	1.47
20	1.00	1.29	1.55
25	1.00	1.35	1.61
30	1.00	1.40	1.66
35	1.05	1.45	1.70
40	1.09	1.49	1.74
45	1.12	1.53	1.78
50	1.16	1.56	1.81
55	1.19	1.59	1.84
60	1.22	1.62	1.87

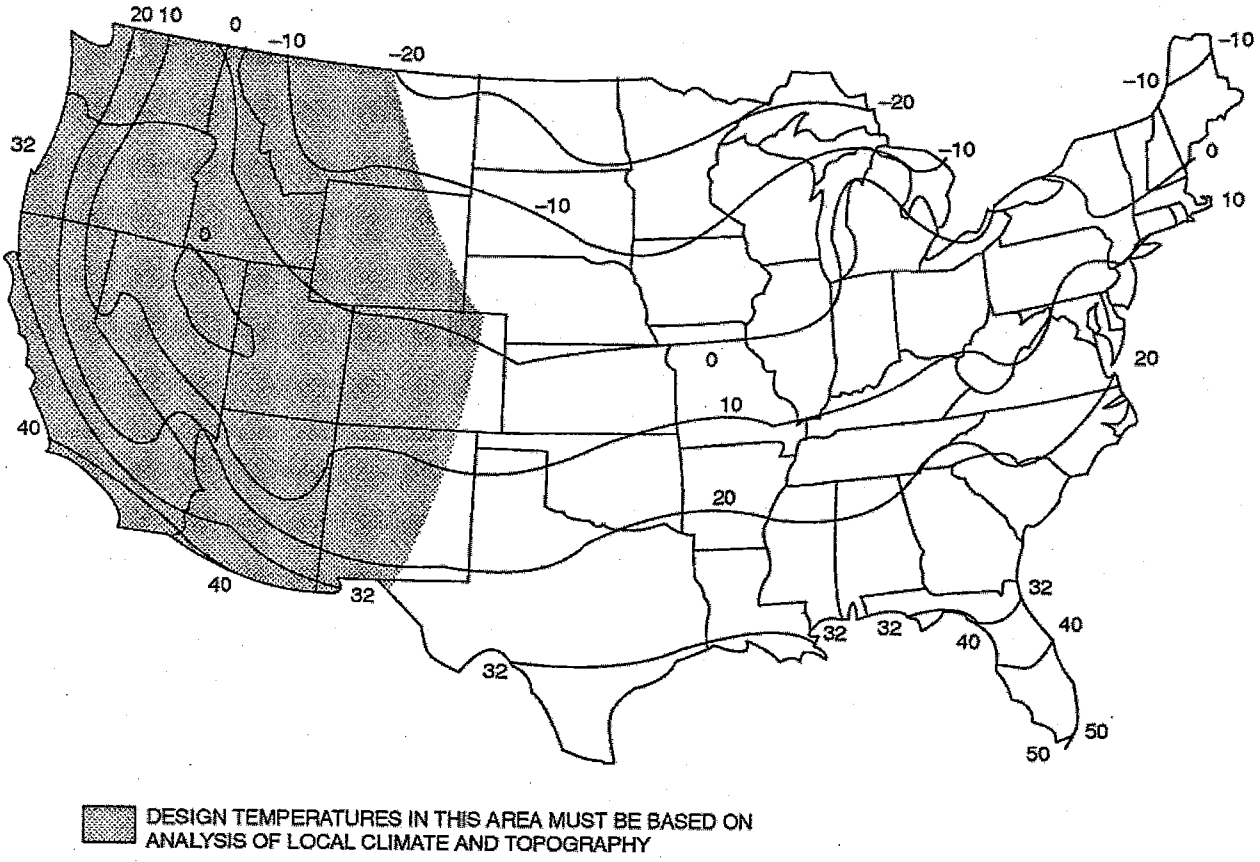

For SI: °C = [(°F)-32]/1.8.

FIGURE R301.2(1)
ISOLINES OF THE 97½ PERCENT WINTER (DECEMBER, JANUARY AND FEBRUARY) DESIGN TEMPERATURES (°F)

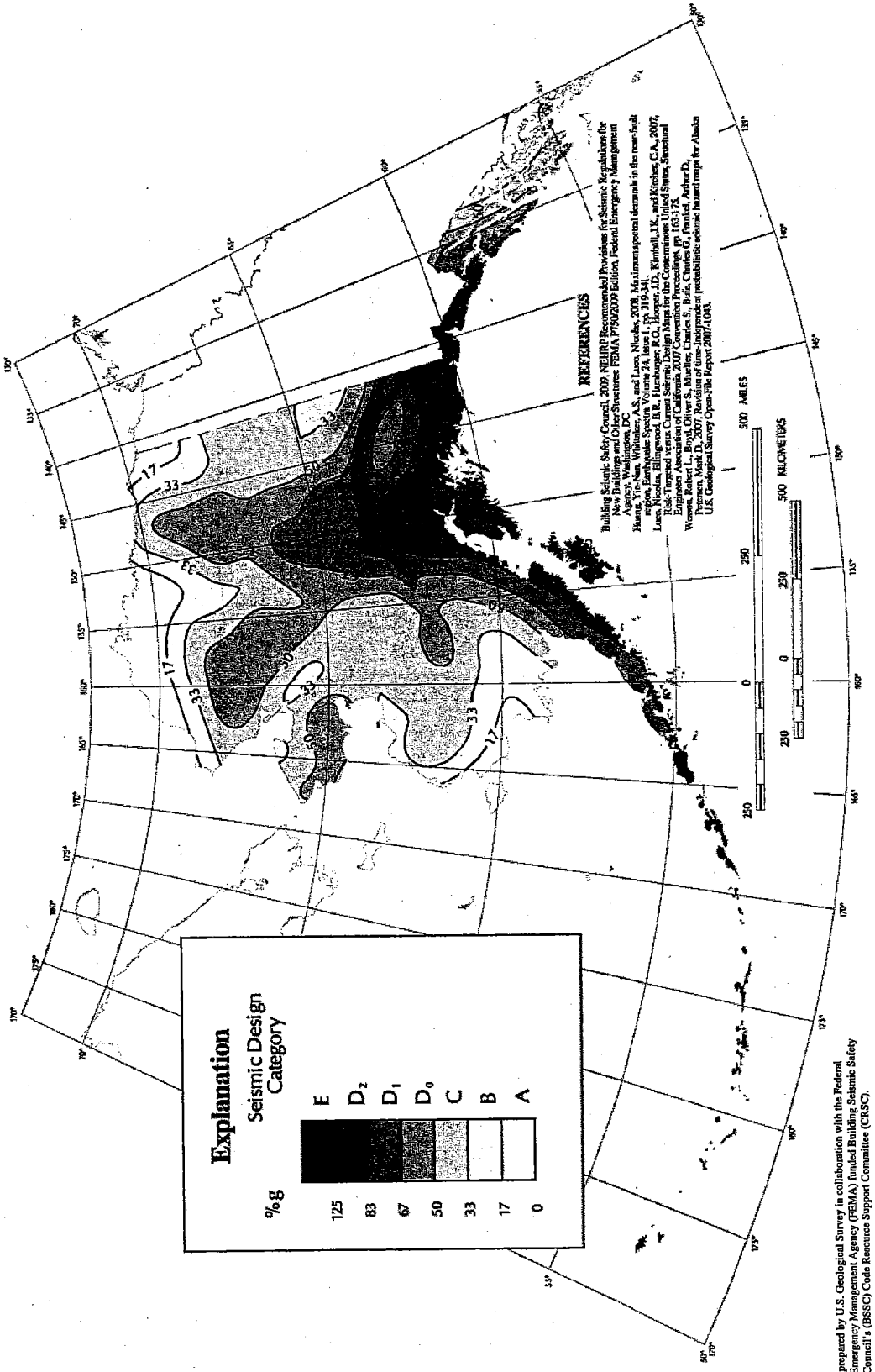

FIGURE R301.2(2)
SEISMIC DESIGN CATEGORIES—SITE CLASS D

(continued)

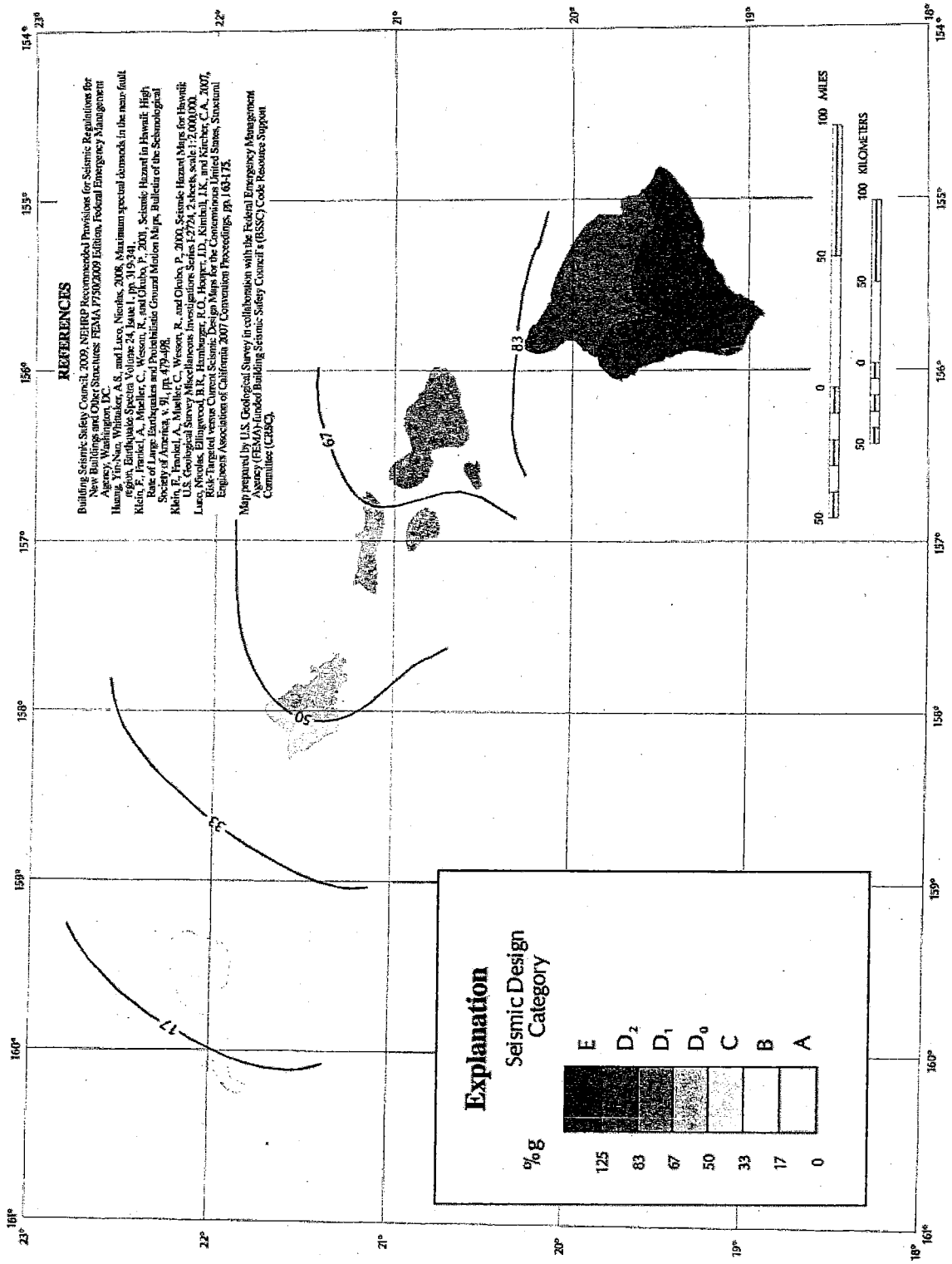

FIGURE R301.2(2)—continued
SEISMIC DESIGN CATEGORIES—SITE CLASS D

((continued)

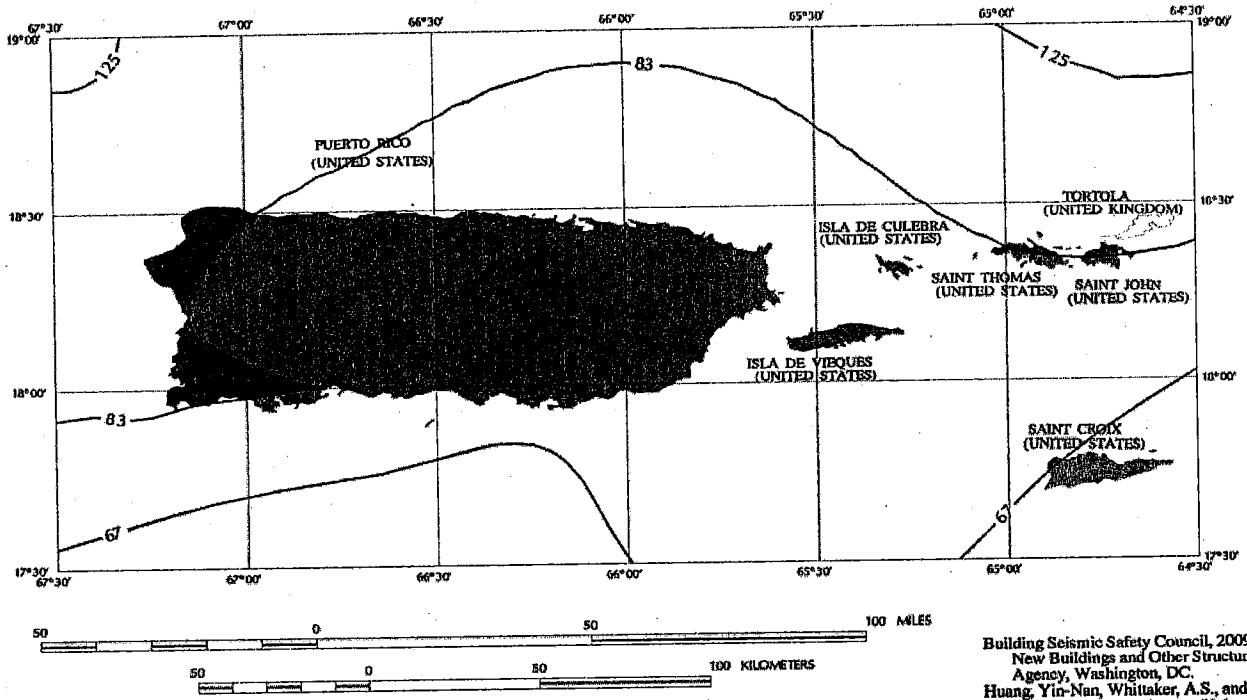

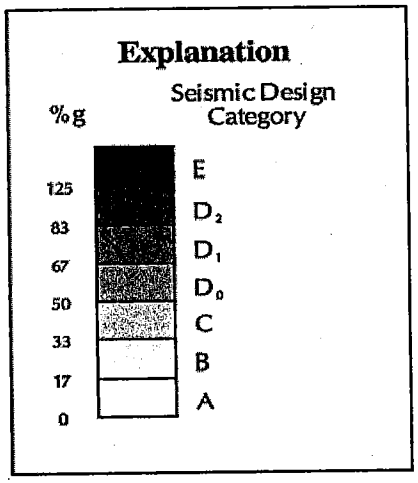

REFERENCES

Building Seismic Safety Council, 2009, NEHRP Recommended Provisions for Seismic Regulations for New Buildings and Other Structures: FEMA P750/2009 Edition, Federal Emergency Management Agency, Washington, DC.

Huang, Yin-Nan, Whittaker, A.S., and Luco, Nicolas, 2008, Maximum spectral demands in the near-fault region, Earthquake Spectra Volume 24, Issue 1, pp. 319-341.

Luco, Nicolas, Ellingwood, B.R., Hamburger, R.O., Hooper, J.D., Kimball, J.K., and Kircher, C.A., 2007, Risk-Targeted versus Current Seismic Design Maps for the Conterminous United States, Structural Engineers Association of California 2007 Convention Proceedings, pp. 163-175.

Mueller, C., Frankel, A., Petersen, M., and Leyendecker, E., 2003, Documentation for 2003 USGS Seismic Hazard Maps for Puerto Rico and the U.S. Virgin Islands, U.S. Geological Survey Open-File Report 03-379.

Map prepared by U.S. Geological Survey in collaboration with the Federal Emergency Management Agency (FEMA)-funded Building Seismic Safety Council's (BSSC) Code Resource Support Committee (CRSC).

FIGURE R301.2(2)—continued
SEISMIC DESIGN CATEGORIES—SITE CLASS D

((continued)

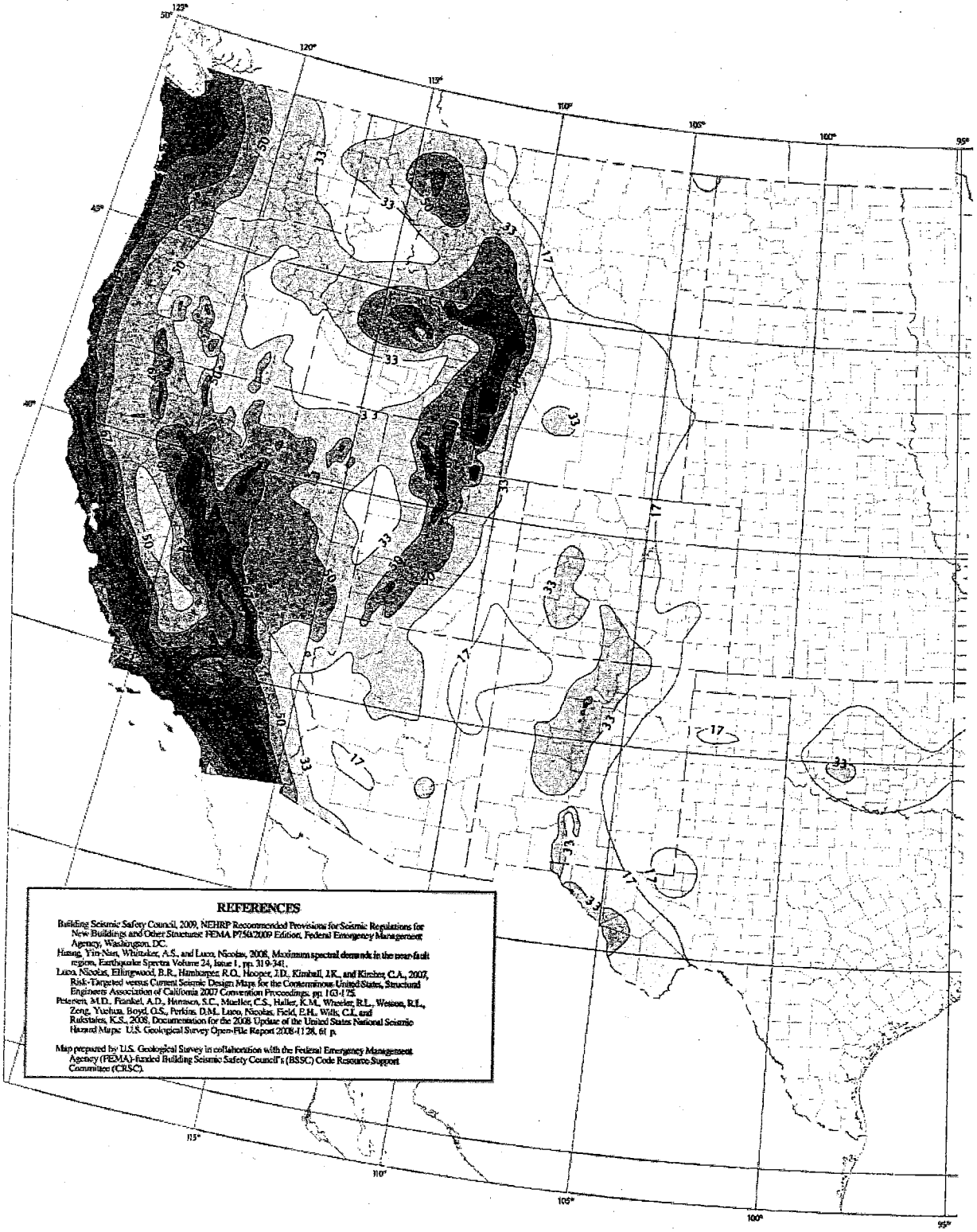

FIGURE R301.2(2)—continued
SEISMIC DESIGN CATEGORIES—SITE CLASS D

(continued)

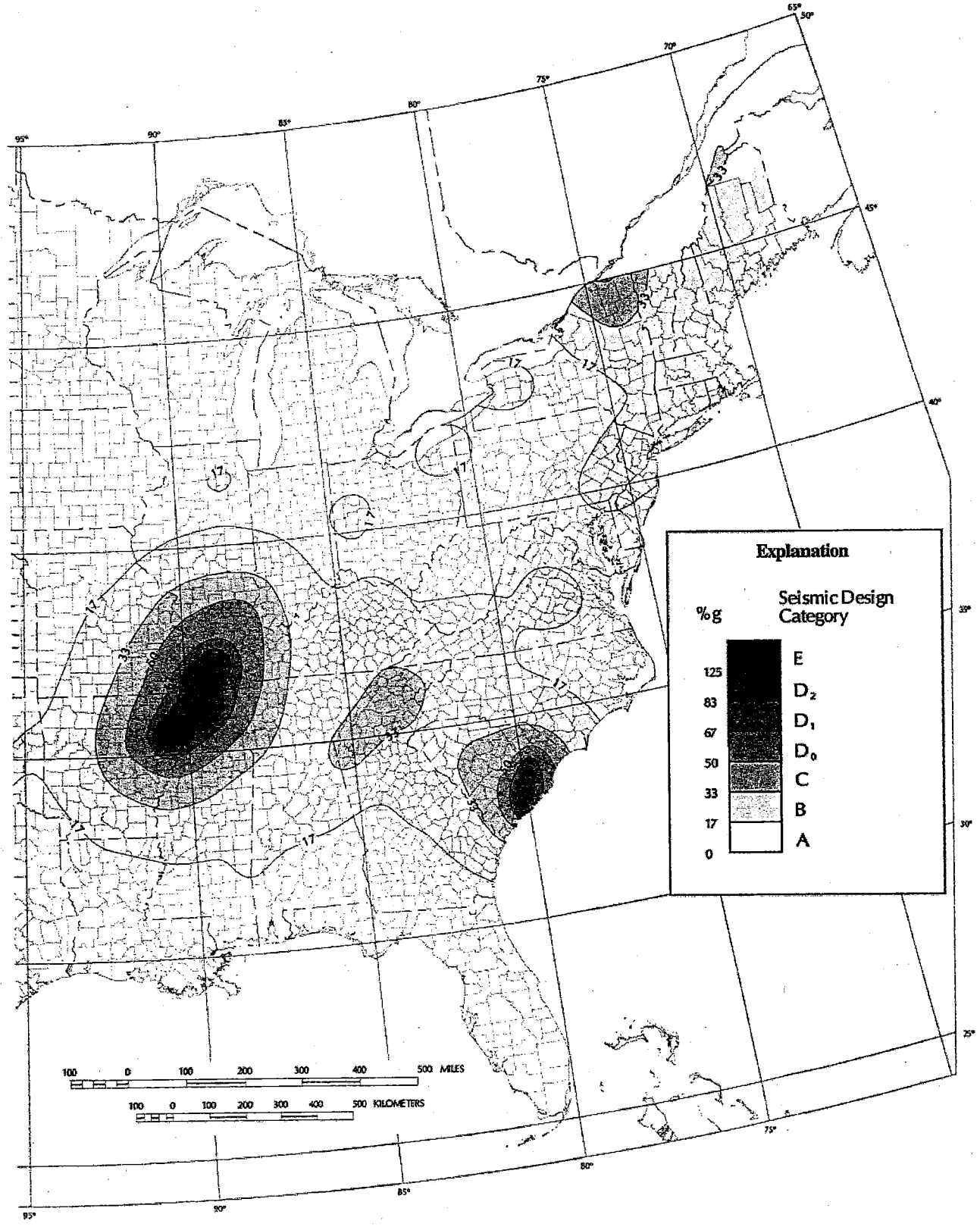

FIGURE R301.2(2)—continued
SEISMIC DESIGN CATEGORIES—SITE CLASS D

3725

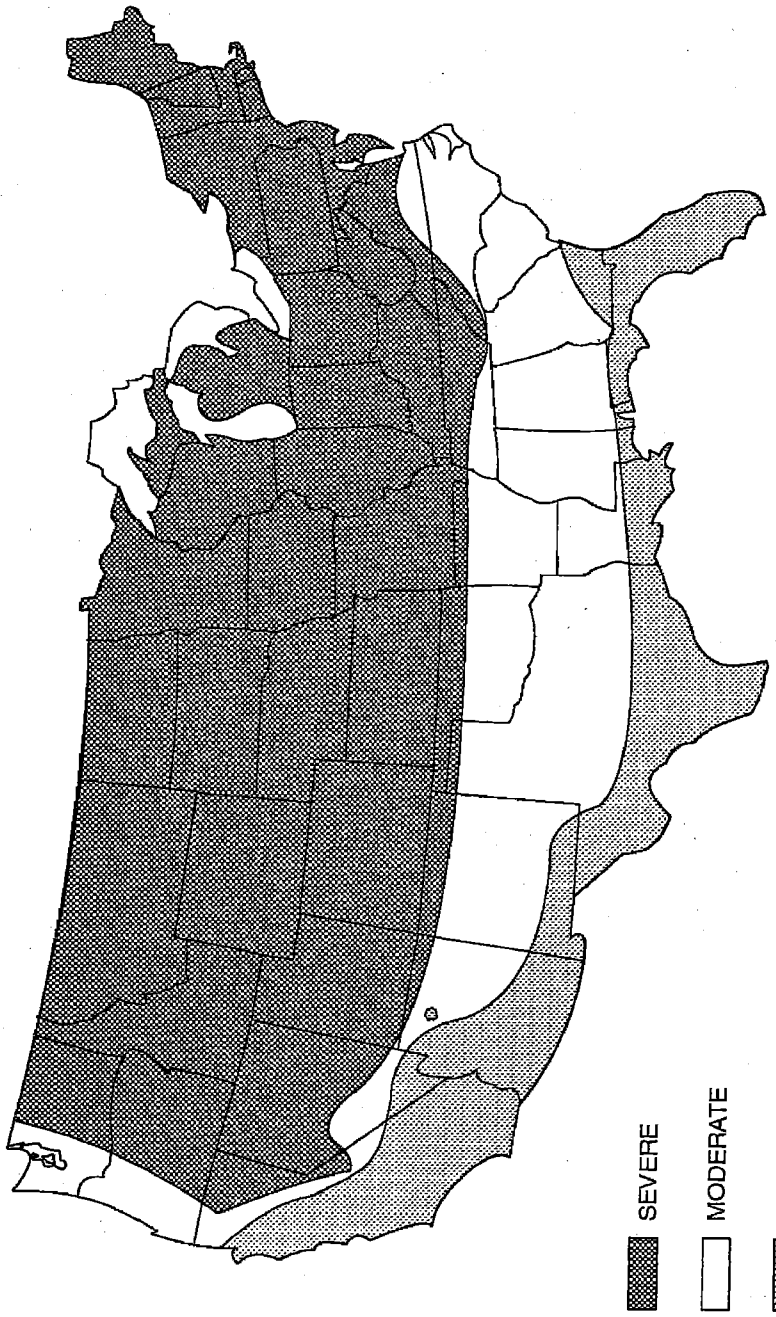

FIGURE R301.2(3)
WEATHERING PROBABILITY MAP FOR CONCRETE[a, b]

a. Alaska and Hawaii are classified as severe and negligible, respectively.
b. Lines defining areas are approximate only. Local conditions may be more or less severe than indicated by region classification. A severe classification is where weather conditions result in significant snowfall combined with extended periods during which there is little or no natural thawing causing deicing salts to be used extensively.

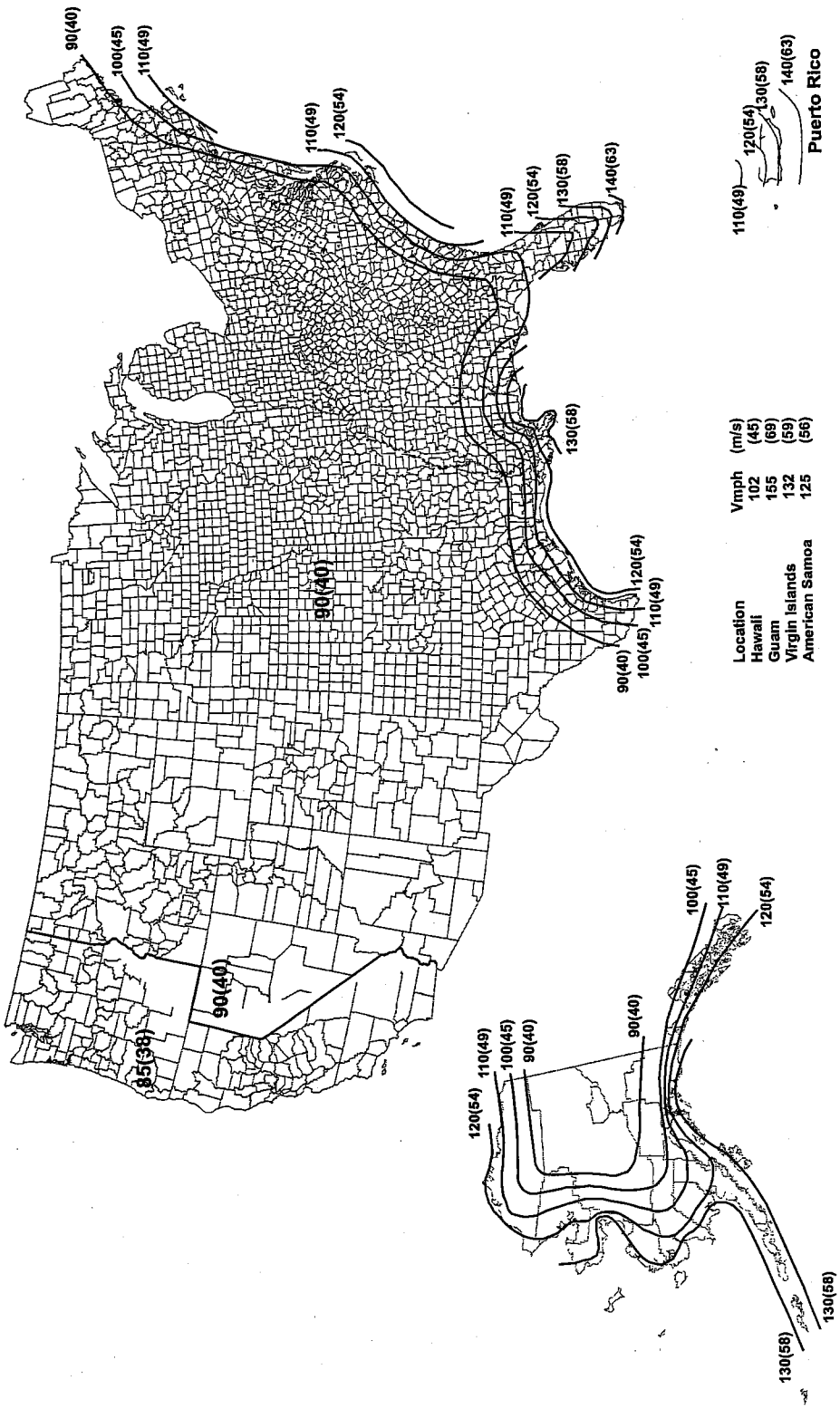

FIGURE R301.2(4)A
BASIC WIND SPEEDS

Notes:
1. Values are nominal design 3-second gust wind speeds in miles per hour (m/s) at 33 ft (10 m) above ground for Exposure C category.
2. Linear interpolation between contours is permitted.
3. Islands and coastal areas outside the last contour shall use the last wind speed contour of the coastal area.
4. Mountainous terrain, gorges, ocean promontories, and special wind regions shall be examined for unusual wind conditions.

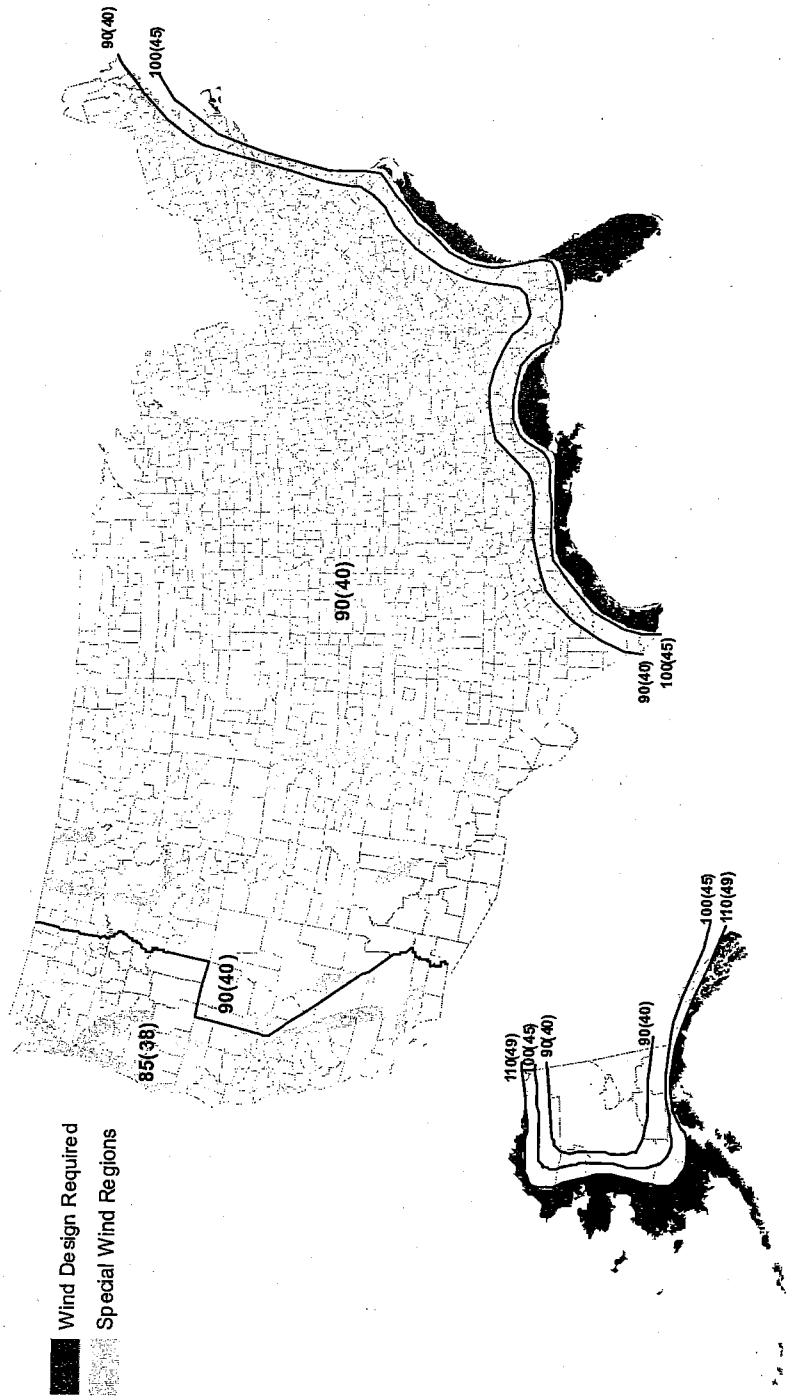

FIGURE R301.2(4)B
REGIONS WHERE WIND DESIGN IS REQUIRED

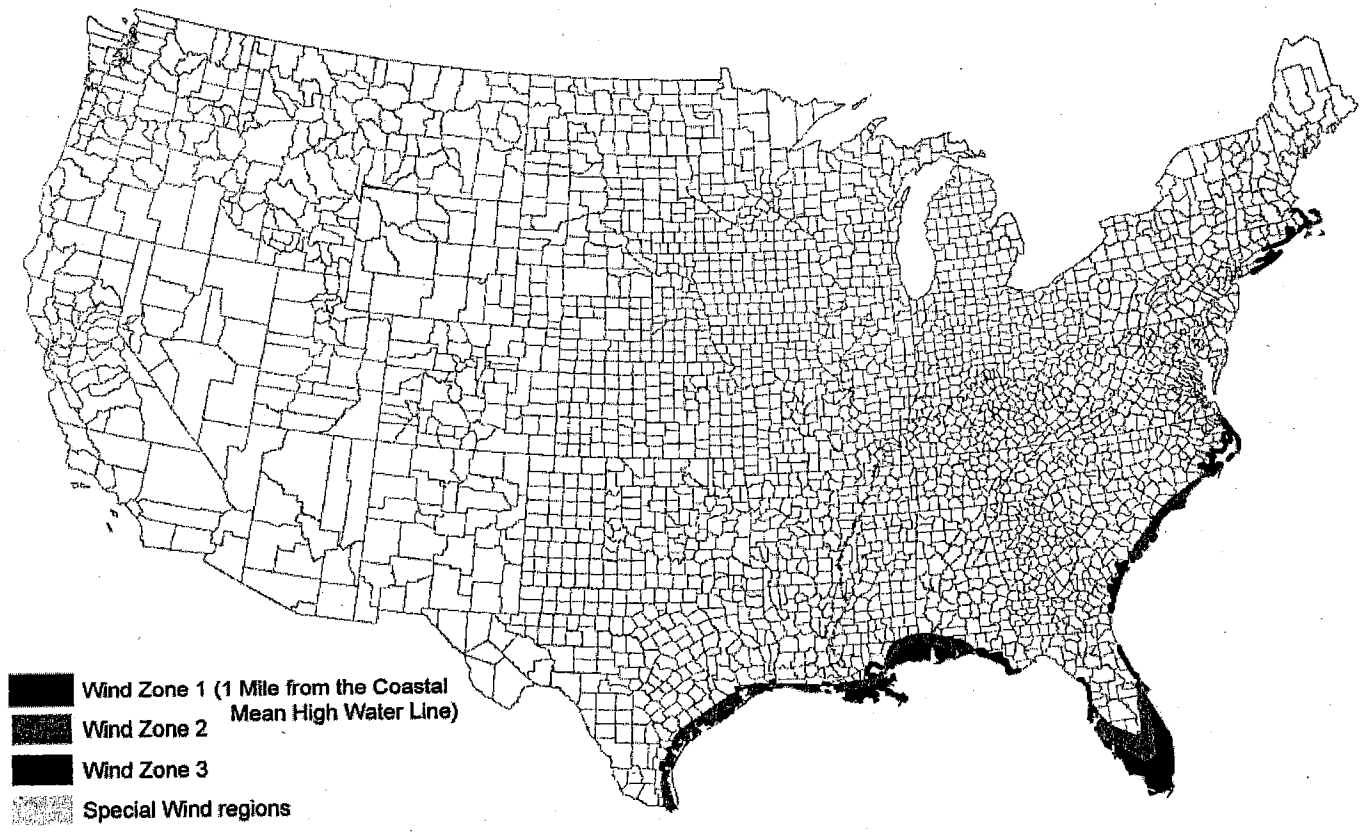

Note:
Wind Zone 3 applies for:
Guam
Virgin Islands
American Samoa
Puerto Rico

Note: Wind Zone 3 applies in Wind Zone 2 areas that are within a mile of the Coastal Mean High Water Line.

Note: Wind Zone 1 applies in Hawaii - Special Wind Regions.

FIGURE R301.2(4)C
WIND-BORNE DEBRIS REGIONS



FIGURE R301.2(5)
GROUND SNOW LOADS, P_g, FOR THE UNITED STATES (lb/ft^2)
(continued)

3730

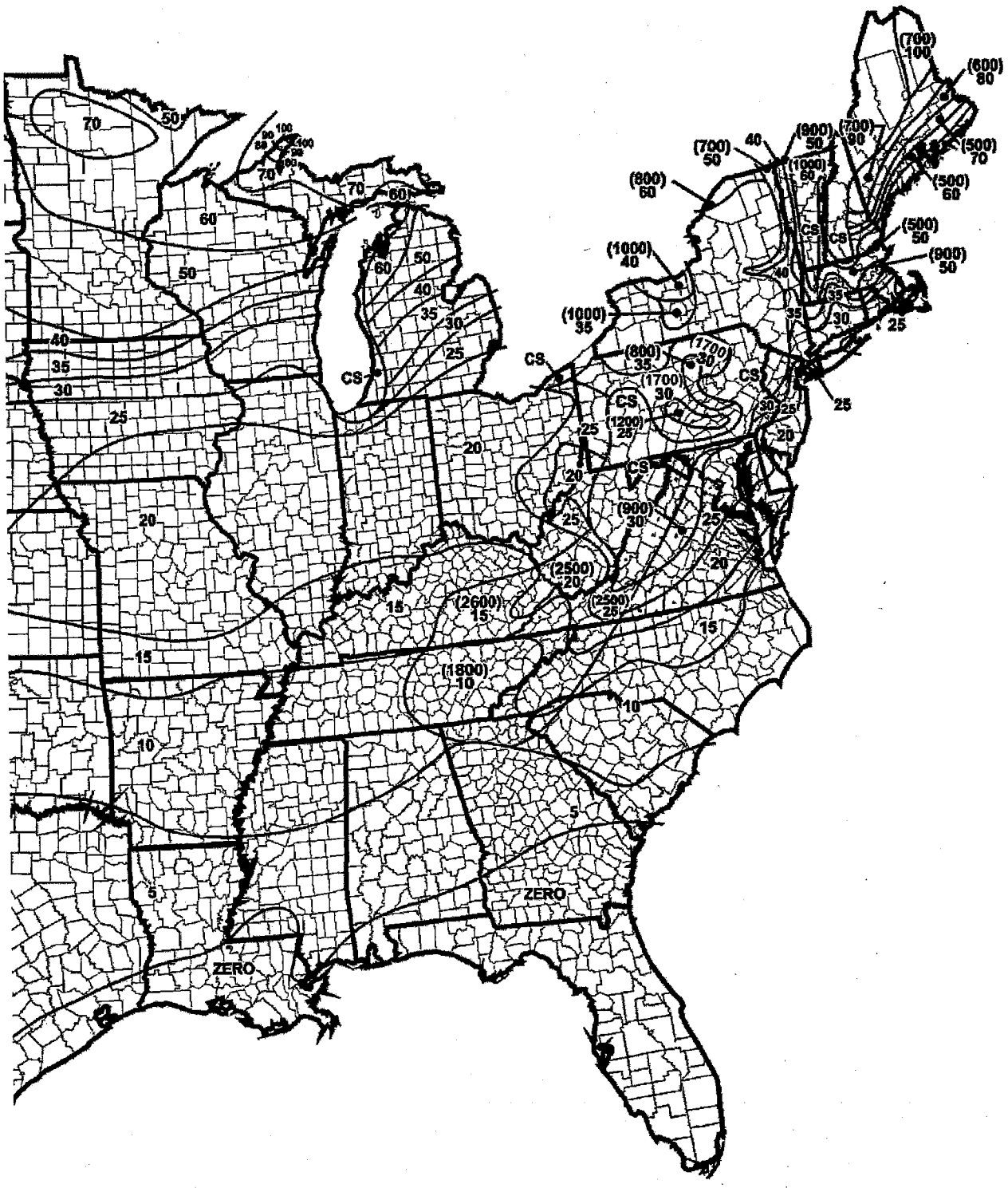

For SI: 1 foot = 304.8 mm, 1 pound per square foot = 0.0479 kPa.

FIGURE R301.2(5)—continued
GROUND SNOW LOADS, P_g, FOR THE UNITED STATES (lb/ft²)

3731

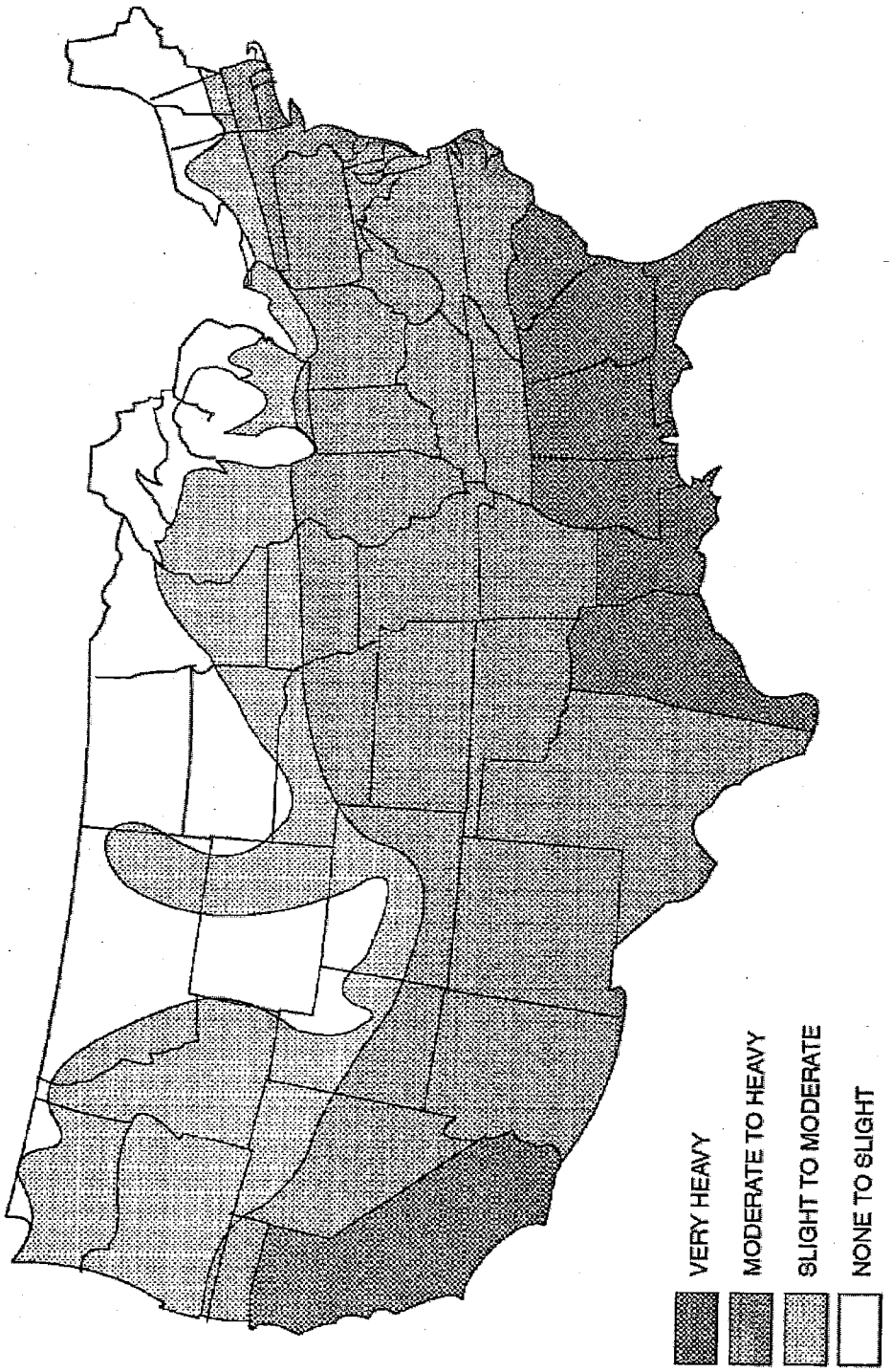

Note: Lines defining areas are approximate only. Local conditions may be more or less severe than indicated by the region classification.

FIGURE R301.2(6)
TERMITE INFESTATION PROBABILITY MAP

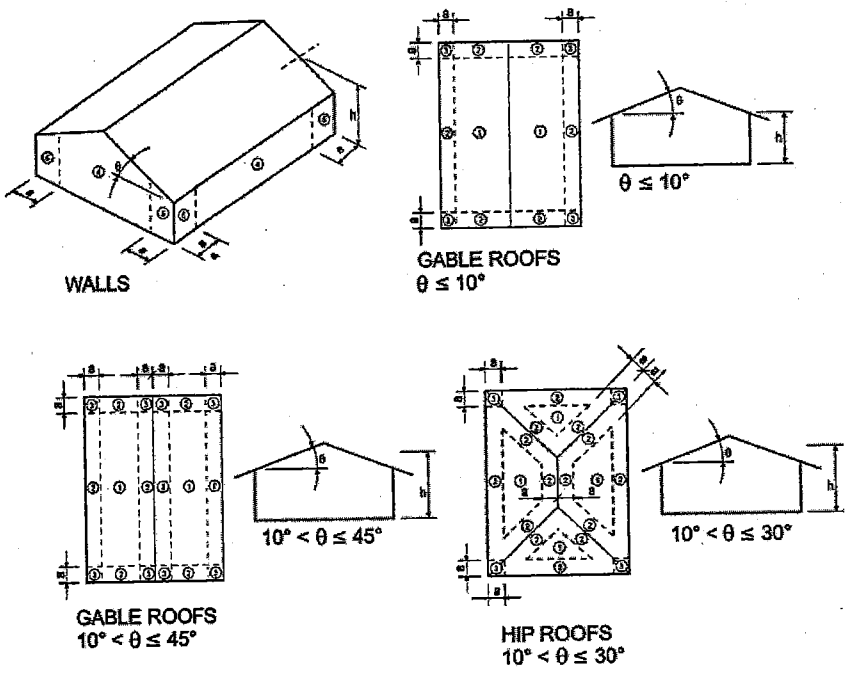

For SI: 1 foot = 304.8 mm, 1 degree = 0.0175 rad.
Note: a = 4 feet in all cases.

FIGURE R301.2(7)
COMPONENT AND CLADDING PRESSURE ZONES

R301.2.1 Wind design criteria. Buildings and portions thereof shall be constructed in accordance with the wind provisions of this code using the basic wind speed in Table R301.2(1) as determined from Figure R301.2(4)A. The structural provisions of this code for wind loads are not permitted where wind design is required as specified in Section R301.2.1.1. Where different construction methods and structural materials are used for various portions of a building, the applicable requirements of this section for each portion shall apply. Where not otherwise specified, the wind loads listed in Table R301.2(2) adjusted for height and exposure using Table R301.2(3) shall be used to determine design load performance requirements for wall coverings, curtain walls, roof coverings, exterior windows, skylights, garage doors and exterior doors. Asphalt shingles shall be designed for wind speeds in accordance with Section R905.2.4. A continuous load path shall be provided to transmit the applicable uplift forces in Section R802.11.1 from the roof assembly to the foundation.

R301.2.1.1 Wind limitations and wind design required. The wind provisions of this code shall not apply to the design of buildings where wind design is required in accordance with Figure R301.2(4)B or where the basic wind speed from Figure R301.2(4)A equals or exceeds 110 miles per hour (49 m/s).

Exceptions:

1. For concrete construction, the wind provisions of this code shall apply in accordance with the limitations of Sections R404 and R611.
2. For structural insulated panels, the wind provisions of this code shall apply in accordance with the limitations of Section R613.

In regions where wind design is required in accordance with Figure R301.2(4)B or where the basic wind speed shown on Figure R301.2(4)A equals or exceeds 110 miles per hour (49 m/s), the design of buildings for wind loads shall be in accordance with one or more of the following methods:

1. AF&PA *Wood Frame Construction Manual* (WFCM); or
2. ICC *Standard for Residential Construction in High-Wind Regions* (ICC 600); or
3. ASCE *Minimum Design Loads for Buildings and Other Structures* (ASCE 7); or
4. AISI *Standard for Cold-Formed Steel Framing—Prescriptive Method For One- and Two-Family Dwellings* (AISI S230); or
5. *California Building Code.*

The elements of design not addressed by the methods in Items 1 through 5 shall be in accordance with the provisions of this code. When ASCE 7 or the *California Building Code* is used for the design of the building, the wind speed map and exposure category requirements as specified in ASCE 7 and the *California Building Code* shall be used.

R301.2.1.2 Protection of openings. Exterior glazing in buildings located in windborne debris regions shall be protected from windborne debris. Glazed opening protection for windborne debris shall meet the requirements of the Large Missile Test of ASTM E 1996 and ASTM E 1886 referenced therein. The applicable wind zones for establishing misile types in ASTM E 1996 are shown on Figure R301.2(4)C. Garage door glazed

opening protection for windborne debris shall meet the requirements of an approved impact-resisting standard or ANSI/DASMA 115.

Exception: Wood structural panels with a minimum thickness of $^7/_{16}$ inch (11 mm) and a maximum span of 8 feet (2438 mm) shall be permitted for opening protection in one- and two-story buildings. Panels shall be precut and attached to the framing surrounding the opening containing the product with the glazed opening. Panels shall be predrilled as required for the anchorage method and shall be secured with the attachment hardware provided. Attachments shall be designed to resist the component and cladding loads determined in accordance with either Table R301.2(2) or ASCE 7, with the permanent corrosion-resistant attachment hardware provided and anchors permanently installed on the building. Attachment in accordance with Table R301.2.1.2 is permitted for buildings with a mean roof height of 33 feet (10 058 mm) or less where located in Wind Zones 1 and 2 in accordance with Figure R301.2(4)C.

TABLE R301.2.1.2
WINDBORNE DEBRIS PROTECTION FASTENING SCHEDULE FOR WOOD STRUCTURAL PANELS[a, b, c, d]

FASTENER TYPE	FASTENER SPACING (inches)[a, b]		
	Panel span ≤ 4 feet	4 feet < panel span ≤ 6 feet	6 feet < panel span ≤ 8 feet
No. 8 wood screw based anchor with 2-inch embedment length	16	10	8
No. 10 wood screw based anchor with 2-inch embedment length	16	12	9
$^1/_4$-inch lag screw based anchor with 2-inch embedment length	16	16	16

For SI: 1 inch = 25.4 mm, 1 foot = 304.8 mm, 1 pound = 4.448 N, 1 mile per hour = 0.447 m/s.

a. This table is based on 130 mph wind speeds and a 33-foot mean roof height.

b. Fasteners shall be installed at opposing ends of the wood structural panel. Fasteners shall be located a minimum of 1 inch from the edge of the panel.

c. Anchors shall penetrate through the exterior wall covering with an embedment length of 2 inches minimum into the building frame. Fasteners shall be located a minimum of $2^1/_2$ inches from the edge of concrete block or concrete.

d. Where panels are attached to masonry or masonry/stucco, they shall be attached using vibration-resistant anchors having a minimum ultimate withdrawal capacity of 1500 pounds.

R301.2.1.3 Wind speed conversion. When referenced documents are based on fastest mile wind speeds, the three-second gust basic wind speeds, V_{3s}, of Figure R301.2(4) shall be converted to fastest mile wind speeds, V_{fm}, using Table R301.2.1.3.

R301.2.1.4 Exposure category. For each wind direction considered, an exposure category that adequately reflects the characteristics of ground surface irregularities shall be determined for the site at which the building or structure is to be constructed. For a site located in the transition zone between categories, the category resulting in the largest wind forces shall apply. Account shall be taken of variations in ground surface roughness that arise from natural topography and vegetation as well as from constructed features. For a site where multiple detached one- and two-family dwellings, townhouses or other structures are to be constructed as part of a subdivision, master-planned community, or otherwise designated as a developed area by the authority having jurisdiction, the exposure category for an individual structure shall be based upon the site conditions that will exist at the time when all adjacent structures on the site have been constructed, provided their construction is expected to begin within one year of the start of construction for the structure for which the exposure category is determined. For any given wind direction, the exposure in which a specific building or other structure is sited shall be assessed as being one of the following categories:

1. Exposure A. Large city centers with at least 50 percent of the buildings having a height in excess of 70 feet (21 336 mm). Use of this exposure category shall be limited to those areas for which terrain representative of Exposure A prevails in the upwind direction for a distance of at least 0.5 mile (0.8 km) or 10 times the height of the building or other structure, whichever is greater. Possible channeling effects or increased velocity pressures due to the building or structure being located in the wake of adjacent buildings shall be taken into account.
2. Exposure B. Urban and suburban areas, wooded areas, or other terrain with numerous closely spaced obstructions having the size of single-family dwellings or larger. Exposure B shall be assumed unless the site meets the definition of another type exposure.
3. Exposure C. Open terrain with scattered obstructions, including surface undulations or other irregularities, having heights generally less than 30 feet (9144 mm) extending more than 1,500 feet (457 m) from the building site in any quad-

TABLE R301.2.1.3
EQUIVALENT BASIC WIND SPEEDS[a]

3-second gust, V_{3s}	85	90	100	105	110	120	125	130	140	145	150	160	170
Fastest mile, V_{fm}	71	76	85	90	95	104	109	114	123	128	133	142	152

For SI: 1 mile per hour = 0.447 m/s.

a. Linear interpolation is permitted.

rant. This exposure shall also apply to any building located within Exposure B type terrain where the building is directly adjacent to open areas of Exposure C type terrain in any quadrant for a distance of more than 600 feet (183 m). This category includes flat, open country and grasslands.

4. Exposure D. Flat, unobstructed areas exposed to wind flowing over open water for a distance of at least 1 mile (1.61 km). Shorelines in Exposure D include inland waterways, the Great Lakes, and coastal areas of California, Oregon, Washington and Alaska. This exposure shall apply only to those buildings and other structures exposed to the wind coming from over the water. Exposure D extends inland from the shoreline a distance of 1500 feet (457 m) or 10 times the height of the building or structure, whichever is greater.

R301.2.1.5 Topographic wind effects. In areas designated in Table R301.2(1) as having local historical data documenting structural damage to buildings caused by wind speed-up at isolated hills, ridges and escarpments that are abrupt changes from the general topography of the area, topographic wind effects shall be considered in the design of the building in accordance with Section R301.2.1.5.1 or in accordance with the provisions of ASCE 7. See Figure R301.2.1.5.1(1) for topographic features for wind speed-up effect.

In these designated areas, topographic wind effects shall apply only to buildings sited on the top half of an isolated hill, ridge or escarpment where all of the following conditions exist:

1. The average slope of the top half of the hill, ridge or escarpment is 10 percent or greater.
2. The hill, ridge or escarpment is 60 feet (18 288 mm) or greater in height for Exposure B, 30 feet (9144 mm) or greater in height for Exposure C, and 15 feet (4572 mm) or greater in height for Exposure D.
3. The hill, ridge or escarpment is isolated or unobstructed by other topographic features of similar height in the upwind direction for a distance measured from its high point of 100 times its height or 2 miles, whichever is less. See Figure R301.2.1.5.1(3) for upwind obstruction.
4. The hill, ridge or escarpment protrudes by a factor of two or more above the height of other upwind topographic features located in any quadrant within a radius of 2 miles measured from its high point.

R301.2.1.5.1 Simplified topographic wind speed-up method. As an alternative to the ASCE 7 topographic wind provisions, the provisions of Section R301.2.1.5.1 shall be permitted to be used to design for wind speed-up effects, where required by Section R301.2.1.5.

Structures located on the top half of isolated hills, ridges or escarpments meeting the conditions of Section R301.2.1.5 shall be designed for an increased basic wind speed as determined by Table R301.2.1.5.1. On the high side of an escarpment, the increased basic wind speed shall extend horizontally downwind from the edge of the escarpment 1.5 times the horizontal length of the upwind slope (1.5L) or 6 times the height of the escarpment (6H), whichever is greater. See Figure R301.2.1.5.1(2) for where wind speed increase is applied.

R301.2.2 Seismic provisions. The seismic provisions of this code shall apply as follows:

1. Townhouses in Seismic Design Categories C, D_0, D_1 and D_2.
2. Detached one- and two-family dwellings in Seismic Design Categories, D_0, D_1 and D_2.

R301.2.2.1 Determination of seismic design category. Buildings shall be assigned a seismic design category in accordance with Figure R301.2(2).

R301.2.2.1.1 Alternate determination of seismic design category. The seismic design categories and corresponding short period design spectral response accelerations, S_{DS} shown in Figure R301.2(2) are based on soil Site Class D, as defined in Section 1613.3.2 of the *California Building Code*. If soil conditions are other than Site Class D, the short period design spectral response accelerations, S_{DS}, for a site can be determined according to Section 1613.3 of the *California Building Code*. The value of S_{DS} determined according to Section 1613.3 of the *California Building Code* is permitted to be used to set the seismic design category according to Table R301.2.2.1.1, and to interpolate between values in Tables R602.10.1.3(3), R603.9.2(1) and other seismic design requirements of this code.

TABLE R301.2.2.1.1
SEISMIC DESIGN CATEGORY DETERMINATION

CALCULATED S_{DS}	SEISMIC DESIGN CATEGORY
$S_{DS} \le 0.17g$	A
$0.17g < S_{DS} \le 0.33g$	B
$0.33g < S_{DS} \le 0.50g$	C
$0.50g < S_{DS} \le 0.67g$	D_0
$0.67g < S_{DS} \le 0.83g$	D_1
$0.83g < S_{DS} \le 1.25g$	D_2
$1.25g < S_{DS}$	E

TABLE R301.2.1.5.1
BASIC WIND MODIFICATION FOR TOPOGRAPHIC WIND EFFECT

BASIC WIND SPEED FROM FIGURE R301.2(4) (mph)	AVERAGE SLOPE OF THE TOP HALF OF HILL, RIDGE OR ESCARPMENT (percent)						
	0.10	0.125	0.15	0.175	0.20	0.23	0.25 or greater
	Required basic wind speed-up, modified for topographic wind speed up (mph)						
85	100	100	100	110	110	110	120
90	100	100	110	110	120	120	120
100	110	120	120	130	130	130	140
110	120	130	130	140	140	150	150
120	140	140	150	150	N/A	N/A	N/A
130	150	N/A	N/A	N/A	N/A	N/A	N/A

For SI: 1 mile per hour = 0.447 m/s.

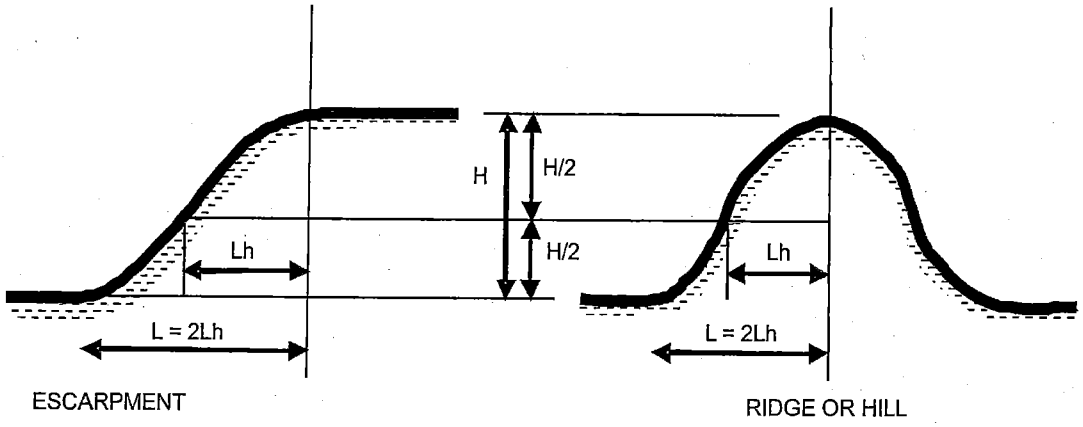

Note: H/2 determines the measurement point for Lh. L is twice Lh.

FIGURE R301.2.1.5.1(1)
TOPOGRAPHIC FEATURES FOR WIND SPEED-UP EFFECT

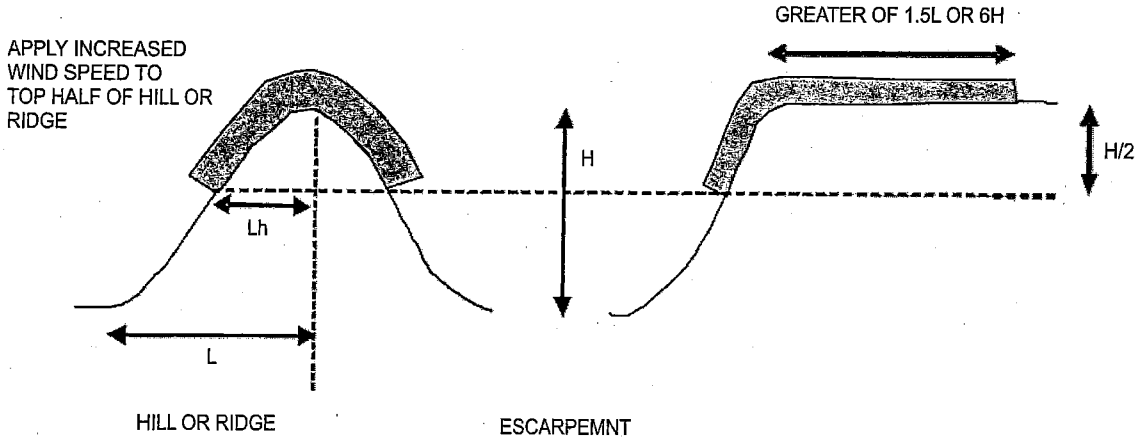

FIGURE R301.2.1.5.1(2)
ILLUSTRATION OF WHERE ON A TOPOGRAPHIC FEATURE, WIND SPEED INCREASE IS APPLIED

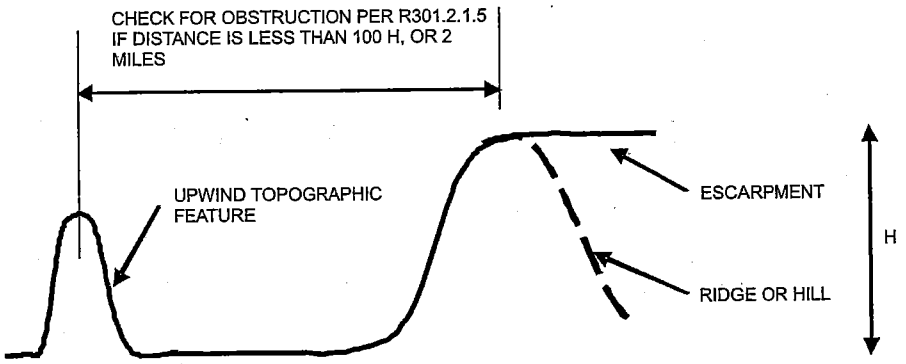

FIGURE R301.2.1.5.1(3)
UPWIND OBSTRUCTION

R301.2.2.1.2 Alternative determination of Seismic Design Category E. Buildings located in Seismic Design Category E in accordance with Figure R301.2(2) are permitted to be reclassified as being in Seismic Design Category D_2 provided one of the following is done:

1. A more detailed evaluation of the seismic design category is made in accordance with the provisions and maps of the *California Building Code*. Buildings located in Seismic Design Category E per Table R301.2.2.1.1, but located in Seismic Design Category D per the *California Building Code*, may be designed using the Seismic Design Category D_2 requirements of this code.
2. Buildings located in Seismic Design Category E that conform to the following additional restrictions are permitted to be constructed in accordance with the provisions for Seismic Design Category D_2 of this code:
   2.1. All exterior shear wall lines or braced wall panels are in one plane vertically from the foundation to the uppermost story.
   2.2. Floors shall not cantilever past the exterior walls.
   2.3. The building is within all of the requirements of Section R301.2.2.2.5 for being considered as regular.

R301.2.2.2 Seismic Design Category C. Structures assigned to Seismic Design Category C shall conform to the requirements of this section.

R301.2.2.2.1 Weights of materials. Average dead loads shall not exceed 15 pounds per square foot (720 Pa) for the combined roof and ceiling assemblies (on a horizontal projection) or 10 pounds per square foot (480 Pa) for floor assemblies, except as further limited by Section R301.2.2. Dead loads for walls above grade shall not exceed:

1. Fifteen pounds per square foot (720 Pa) for exterior light-frame wood walls.
2. Fourteen pounds per square foot (670 Pa) for exterior light-frame cold-formed steel walls.
3. Ten pounds per square foot (480 Pa) for interior light-frame wood walls.
4. Five pounds per square foot (240 Pa) for interior light-frame cold-formed steel walls.
5. Eighty pounds per square foot (3830 Pa) for 8-inch-thick (203 mm) masonry walls.
6. Eighty-five pounds per square foot (4070 Pa) for 6-inch-thick (152 mm) concrete walls.
7. Ten pounds per square foot (480 Pa) for SIP walls.

Exceptions:

1. Roof and ceiling dead loads not exceeding 25 pounds per square foot (1190 Pa) shall be permitted provided the wall bracing amounts in Chapter 6 are increased in accordance with Table R301.2.2.2.1.
2. Light-frame walls with stone or masonry veneer shall be permitted in accordance with the provisions of Sections R702.1 and R703.
3. Fireplaces and chimneys shall be permitted in accordance with Chapter 10.

TABLE R301.2.2.2.1
WALL BRACING ADJUSTMENT FACTORS BY ROOF COVERING DEAD LOAD[a]

WALL SUPPORTING	ROOF/CEILING DEAD LOAD	
	15 psf or less	25 psf
Roof only	1.0	1.2
Roof plus one or two stories	1.0	1.1

For SI: 1 pound per square foot = 0.0479 kPa.
a. Linear interpolation shall be permitted.

R301.2.2.2.2 Stone and masonry veneer. Anchored stone and masonry veneer shall comply with the requirements of Sections R702.1 and R703.

R301.2.2.2.3 Masonry construction. Masonry construction shall comply with the requirements of Section R606.12.

R301.2.2.2.4 Concrete construction. Detached one- and two-family dwellings with exterior above-

grade concrete walls shall comply with the requirements of Section R611, PCA 100 or shall be designed in accordance with ACI 318. Townhouses with above-grade exterior concrete walls shall comply with the requirements of PCA 100 or shall be designed in accordance with ACI 318.

R301.2.2.2.5 Irregular buildings. The seismic provisions of this code shall not be used for irregular structures located in Seismic Design Categories C, D_0, D_1 and D_2. Irregular portions of structures shall be designed in accordance with accepted engineering practice to the extent the irregular features affect the performance of the remaining structural system. When the forces associated with the irregularity are resisted by a structural system designed in accordance with accepted engineering practice, design of the remainder of the building shall be permitted using the provisions of this code. A building or portion of a building shall be considered to be irregular when one or more of the following conditions occur:

1. When exterior shear wall lines or braced wall panels are not in one plane vertically from the foundation to the uppermost story in which they are required.

   Exception: For wood light-frame construction, floors with cantilevers or setbacks not exceeding four times the nominal depth of the wood floor joists are permitted to support braced wall panels that are out of plane with braced wall panels below provided that:

   1. Floor joists are nominal 2 inches by 10 inches (51 mm by 254 mm) or larger and spaced not more than 16 inches (406 mm) on center.
   2. The ratio of the back span to the cantilever is at least 2 to 1.
   3. Floor joists at ends of braced wall panels are doubled.
   4. For wood-frame construction, a continuous rim joist is connected to ends of all cantilever joists. When spliced, the rim joists shall be spliced using a galvanized metal tie not less than 0.058 inch (1.5 mm) (16 gage) and $1^1/_2$ inches (38 mm) wide fastened with six 16d nails on each side of the splice or a block of the same size as the rim joist of sufficient length to fit securely between the joist space at which the splice occurs fastened with eight 16d nails on each side of the splice; and
   5. Gravity loads carried at the end of cantilevered joists are limited to uniform wall and roof loads and the reactions from headers having a span of 8 feet (2438 mm) or less.

2. When a section of floor or roof is not laterally supported by shear walls or braced wall lines on all edges.

   Exception: Portions of floors that do not support shear walls or braced wall panels above, or roofs, shall be permitted to extend no more than 6 feet (1829 mm) beyond a shear wall or braced wall line.

3. When the end of a braced wall panel occurs over an opening in the wall below and ends at a horizontal distance greater than 1 foot (305 mm) from the edge of the opening. This provision is applicable to shear walls and braced wall panels offset in plane and to braced wall panels offset out of plane as permitted by the exception to Item 1 above.

   Exception: For wood light-frame wall construction, one end of a braced wall panel shall be permitted to extend more than 1 foot (305 mm) over an opening not more than 8 feet (2438 mm) wide in the wall below provided that the opening includes a header in accordance with the following:

   1. The building width, loading condition and framing member species limitations of Table R502.5(1) shall apply; and
   2. Not less than one 2 × 12 or two 2 × 10 for an opening not more than 4 feet (1219 mm) wide; or
   3. Not less than two 2 × 12 or three 2 × 10 for an opening not more than 6 feet (1829 mm) wide; or
   4. Not less than three 2 × 12 or four 2 × 10 for an opening not more than 8 feet (2438 mm) wide; and
   5. The entire length of the braced wall panel does not occur over an opening in the wall below.

4. When an opening in a floor or roof exceeds the lesser of 12 feet (3658 mm) or 50 percent of the least floor or roof dimension.
5. When portions of a floor level are vertically offset.

   Exceptions:

   1. Framing supported directly by continuous foundations at the perimeter of the building.

3738

2. For wood light-frame construction, floors shall be permitted to be vertically offset when the floor framing is lapped or tied together as required by Section R502.6.1.

6. When shear walls and braced wall lines do not occur in two perpendicular directions.

7. When stories above grade plane partially or completely braced by wood wall framing in accordance with Section R602 or steel wall framing in accordance with Section R603 include masonry or concrete construction. When this irregularity applies, the entire *story* shall be designed in accordance with accepted engineering practice.

Exception: Fireplaces, chimneys and masonry veneer as permitted by this code.

R301.2.2.3 Seismic Design Categories D_0, D_1 and D_2. Structures assigned to Seismic Design Categories D_0, D_1 and D_2 shall conform to the requirements for Seismic Design Category C and the additional requirements of this section.

R301.2.2.3.1 Height limitations. Wood-framed buildings shall be limited to three stories above grade plane or the limits given in Table R602.10.3(3). Cold-formed, steel-framed buildings shall be limited to less than or equal to three stories above grade plane in accordance with AISI S230. Mezzanines as defined in Section R202 shall not be considered as stories. Structural insulated panel buildings shall be limited to two stories above grade plane.

R301.2.2.3.2 Stone and masonry veneer. Anchored stone and masonry veneer shall comply with the requirements of Sections R702.1 and R703.

R301.2.2.3.3 Masonry construction. Masonry construction in Seismic Design Categories D_0 and D_1 shall comply with the requirements of Section R606.12.1. Masonry construction in Seismic Design Category D_2 shall comply with the requirements of Section R606.12.4.

R301.2.2.3.4 Concrete construction. Buildings with exterior above-grade concrete walls shall comply with PCA 100 or shall be designed in accordance with ACI 318.

R301.2.2.3.5 Cold-formed steel framing in Seismic Design Categories D_0, D_1 and D_2. In Seismic Design Categories D_0, D_1 and D_2 in addition to the requirements of this code, cold-formed steel framing shall comply with the requirements of AISI S230.

R301.2.2.3.6 Masonry chimneys. Masonry chimneys shall be reinforced and anchored to the building in accordance with Sections R1003.3 and R1003.4.

R301.2.2.3.7 Anchorage of water heaters. Water heaters shall be anchored against movement and overturning in accordance with the *California Plumbing Code*.

R301.2.2.4 Seismic Design Category E. Buildings in Seismic Design Category E shall be designed to resist seismic loads in accordance with the *California Building Code*, except when the seismic design category is reclassified to a lower seismic design category in accordance with Section R301.2.2.1. Components of buildings not required to be designed to resist seismic loads shall be constructed in accordance with the provisions of this code.

R301.2.3 Snow loads. Wood-framed construction, cold-formed, steel-framed construction and masonry and concrete construction, and structural insulated panel construction in regions with ground snow loads 70 pounds per square foot (3.35 kPa) or less, shall be in accordance with Chapters 5, 6 and 8. Buildings in regions with ground snow loads greater than 70 pounds per square foot (3.35 kPa) shall be designed in accordance with accepted engineering practice.

R301.2.4 Floodplain construction. Buildings and structures constructed in whole or in part in flood hazard areas (including A or V Zones) as established in Table R301.2(1) shall be designed and constructed in accordance with Section R322. Buildings and structures located in whole or in part in identified floodways shall be designed and constructed in accordance with ASCE 24.

R301.2.4.1 Alternative provisions. As an alternative to the requirements in Section R322.3 for buildings and structures located in whole or in part in coastal high-hazard areas (V Zones) and coastal A Zones, if delineated, ASCE 24 is permitted subject to the limitations of this code and the limitations therein.

R301.3 Story height. The wind and seismic provisions of this code shall apply to buildings with story heights not exceeding the following:

1. For wood wall framing, the laterally unsupported bearing wall stud height permitted by Table R602.3(5) plus a height of floor framing not to exceed 16 inches (406 mm).

   Exception: For wood-framed wall buildings with bracing in accordance with Tables R602.10.3(1) and R602.10.3(3), the wall stud clear height used to determine the maximum permitted story height may be increased to 12 feet (3658 mm) without requiring an engineered design for the building wind and seismic force-resisting systems provided that the length of bracing required by Table R602.10.3(1) is increased by multiplying by a factor of 1.10 and the length of bracing required by Table R602.10.3(3) is increased by multiplying by a factor of 1.20. Wall studs are still subject to the requirements of this section.

2. For steel wall framing, a stud height of 10 feet (3048 mm), plus a height of floor framing not to exceed 16 inches (406 mm).

3. For masonry walls, a maximum bearing wall clear height of 12 feet (3658 mm) plus a height of floor framing not to exceed 16 inches (406 mm).

   Exception: An additional 8 feet (2438 mm) is permitted for gable end walls.

4. For insulating concrete form walls, the maximum bearing wall height per story as permitted by Section R611 tables plus a height of floor framing not to exceed 16 inches (406 mm).

5. For structural insulated panel (SIP) walls, the maximum bearing wall height per story as permitted by Section R613 tables shall not exceed 10 feet (3048 mm) plus a height of floor framing not to exceed 16 inches (406 mm).

Individual walls or walls studs shall be permitted to exceed these limits as permitted by Chapter 6 provisions, provided story heights are not exceeded. Floor framing height shall be permitted to exceed these limits provided the story height does not exceed 11 feet 7 inches (3531 mm). An engineered design shall be provided for the wall or wall framing members when they exceed the limits of Chapter 6. Where the story height limits of this section are exceeded, the design of the building, or the noncompliant portions thereof, to resist wind and seismic loads shall be in accordance with the *California Building Code*.

R301.4 Dead load. The actual weights of materials and construction shall be used for determining dead load with consideration for the dead load of fixed service equipment.

R301.5 Live load. The minimum uniformly distributed live load shall be as provided in Table R301.5.

R301.6 Roof load. The roof shall be designed for the live load indicated in Table R301.6 or the snow load indicated in Table R301.2(1), whichever is greater.

TABLE R301.6
MINIMUM ROOF LIVE LOADS IN POUNDS-FORCE PER SQUARE FOOT OF HORIZONTAL PROJECTION

ROOF SLOPE	TRIBUTARY LOADED AREA IN SQUARE FEET FOR ANY STRUCTURAL MEMBER		
	0 to 200	201 to 600	Over 600
Flat or rise less than 4 inches per foot (1:3)	20	16	12
Rise 4 inches per foot (1:3) to less than 12 inches per foot (1:1)	16	14	12
Rise 12 inches per foot (1:1) and greater	12	12	12

For SI: 1 square foot = 0.0929 m^2, 1 pound per square foot = 0.0479 kPa, 1 inch per foot = 83.3 mm/m.

R301.7 Deflection. The allowable deflection of any structural member under the live load listed in Sections R301.5 and R301.6 or wind loads determined by Section R301.2.1 shall not exceed the values in Table R301.7.

R301.8 Nominal sizes. For the purposes of this code, where dimensions of lumber are specified, they shall be deemed to be nominal dimensions unless specifically designated as actual dimensions.

TABLE R301.5
MINIMUM UNIFORMLY DISTRIBUTED LIVE LOADS
(in pounds per square foot)

USE	LIVE LOAD
Uninhabitable attics without storage[b]	10
Uninhabitable attics with limited storage[b, g]	20
Habitable attics and attics served with fixed stairs	30
Balconies (exterior) and decks[e]	40
Fire escapes	40
Guardrails and handrails[d]	200[h]
Guardrail in-fill components[f]	50[h]
Passenger vehicle garages[a]	50[a]
Rooms other than sleeping room	40
Sleeping rooms	30
Stairs	40[c]

For SI: 1 pound per square foot = 0.0479 kPa, 1 square inch = 645 mm^2, 1 pound = 4.45 N.

a. Elevated garage floors shall be capable of supporting a 2,000-pound load applied over a 20-square-inch area.

b. Uninhabitable attics without storage are those where the maximum clear height between joists and rafters is less than 42 inches, or where there are not two or more adjacent trusses with web configurations capable of accommodating an assumed rectangle 42 inches high by 24 inches in width, or greater, within the plane of the trusses. This live load need not be assumed to act concurrently with any other live load requirements.

c. Individual stair treads shall be designed for the uniformly distributed live load or a 300-pound concentrated load acting over an area of 4 square inches, whichever produces the greater stresses.

d. A single concentrated load applied in any direction at any point along the top.

e. See Section R502.2.2 for decks attached to exterior walls.

f. Guard in-fill components (all those except the handrail), balusters and panel fillers shall be designed to withstand a horizontally applied normal load of 50 pounds on an area equal to 1 square foot. This load need not be assumed to act concurrently with any other live load requirement.

g. Uninhabitable attics with limited storage are those where the maximum clear height between joists and rafters is 42 inches or greater, or where there are two or more adjacent trusses with web configurations capable of accommodating an assumed rectangle 42 inches in height by 24 inches in width, or greater, within the plane of the trusses.

   The live load need only be applied to those portions of the joists or truss bottom chords where all of the following conditions are met:

   1. The attic area is accessible from an opening not less than 20 inches in width by 30 inches in length that is located where the clear height in the attic is a minimum of 30 inches.
   2. The slopes of the joists or truss bottom chords are no greater than 2 inches vertical to 12 units horizontal.
   3. Required insulation depth is less than the joist or truss bottom chord member depth.

   The remaining portions of the joists or truss bottom chords shall be designed for a uniformly distributed concurrent live load of not less than 10 lb/ft^2.

h. Glazing used in handrail assemblies and guards shall be designed with a safety factor of 4. The safety factor shall be applied to each of the concentrated loads applied to the top of the rail, and to the load on the in-fill components. These loads shall be determined independent of one another, and loads are assumed not to occur with any other live load.

SECTION R302
FIRE-RESISTANT CONSTRUCTION

R302.1 Exterior walls. Construction, projections, openings and penetrations of exterior walls of dwellings and accessory buildings shall comply with Table R302.1(1); or dwellings

TABLE R301.7
ALLOWABLE DEFLECTION OF STRUCTURAL MEMBERS[b, c]

STRUCTURAL MEMBER	ALLOWABLE DEFLECTION
Rafters having slopes greater than 3:12 with no finished ceiling attached to rafters	*L*/180
Interior walls and partitions	*H*/180
Floors/ceilings with plaster or stucco finish	*L*/360
All other structural members	*L*/240
Exterior walls—wind loads[a] with plaster or stucco finish	*H*/360
Exterior walls with other brittle finishes	*H*/240
Exterior walls with flexible finishes	*H*/120[d]
Lintels supporting masonry veneer walls[e]	*L*/600

Note: *L* = span length, *H* = span height.

a. The wind load shall be permitted to be taken as 0.7 times the Component and Cladding loads for the purpose of the determining deflection limits herein.

b For cantilever members, *L* shall be taken as twice the length of the cantilever.

c. For aluminum structural members or panels used in roofs or walls of sunroom additions or patio covers, not supporting edge of glass or sandwich panels, the total load deflection shall not exceed *L*/60. For continuous aluminum structural members supporting edge of glass, the total load deflection shall not exceed *L*/175 for each glass lite or *L*/60 for the entire length of the member, whichever is more stringent. For sandwich panels used in roofs or walls of sunroom additions or patio covers, the total load deflection shall not exceed *L*/120.

d. Deflection for exterior walls with interior gypsum board finish shall be limited to an allowable deflection of *H*/180.

e. Refer to Section R703.7.2.

and accessory buildings equipped throughout with an automatic sprinkler system installed in accordance with Section *R313* shall comply with Table R302.1(2).

Exceptions:

1. Walls, projections, openings or penetrations in walls perpendicular to the line used to determine the fire separation distance.
2. Walls of dwellings and accessory structures located on the same lot.
3. Detached tool sheds and storage sheds, playhouses and similar structures exempted from permits are not required to provide wall protection based on location on the lot. Projections beyond the exterior wall shall not extend over the lot line.
4. Detached garages accessory to a dwelling located within 2 feet (610 mm) of a lot line are permitted to have roof eave projections not exceeding 4 inches (102 mm).
5. Foundation vents installed in compliance with this code are permitted.

R302.2 Townhouses. Each townhouse shall be considered a separate building and shall be separated by fire-resistance-rated wall assemblies meeting the requirements of Section R302.1 for exterior walls.

Exception: A common 1-hour fire-resistance-rated wall assembly tested in accordance with ASTM E 119 or UL 263 is permitted for townhouses if such walls do not contain plumbing or mechanical equipment, ducts or vents in the cavity of the common wall. The wall shall be rated for fire exposure from both sides and shall extend to and be tight against exterior walls and the underside of the roof sheathing. Electrical installations shall be installed in accordance with the *California Electrical Code*. Penetrations of electrical outlet boxes shall be in accordance with Section R302.4.

R302.2.1 Continuity. The fire-resistance-rated wall or assembly separating townhouses shall be continuous from the foundation to the underside of the roof sheathing, deck or slab. The fire-resistance rating shall extend the full length of the wall or assembly, including wall extensions through and separating attached enclosed accessory structures.

R302.2.2 Parapets. Parapets constructed in accordance with Section R302.2.3 shall be constructed for townhouses

TABLE R302.1(1)
EXTERIOR WALLS

EXTERIOR WALL ELEMENT		MINIMUM FIRE-RESISTANCE RATING	MINIMUM FIRE SEPARATION DISTANCE
Walls	Fire-resistance rated	1 hour—tested in accordance with ASTM E 119 or UL 263 with exposure from both sides	< 5 feet
	Not fire-resistance rated	0 hours	≥ 5 feet
Projections	Fire-resistance rated	1 hour on the underside	≥ 2 feet to < 5 feet
	Not fire-resistance rated	0 hours	≥ 5 feet
Openings in walls	Not allowed	N/A	< 3 feet
	25% maximum of wall area	0 hours	3 feet
	Unlimited	0 hours	5 feet
Penetrations	All	Comply with Section R302.4	< 5 feet
		None required	5 feet

For SI: 1 foot = 304.8 mm.
N/A = Not Applicable.

TABLE R302.1(2)
EXTERIOR WALLS—DWELLINGS *AND ACCESSORY BUILDINGS WITH AUTOMATIC RESIDENTIAL FIRE SPRINKLER PROTECTION*

EXTERIOR WALL ELEMENT		MINIMUM FIRE-RESISTANCE RATING	MINIMUM FIRE SEPARATION DISTANCE
Walls	Fire-resistance rated	1 hour—tested in accordance with ASTM E 119 or UL 263 with exposure from the outside	0 feet
	Not fire-resistance rated	0 hours	3 feet[a]
Projections	Fire-resistance rated	1 hour on the underside	2 feet[a]
	Not fire-resistance rated	0 hours	3 feet
Openings in walls	Not allowed	N/A	< 3 feet
	Unlimited	0 hours	3 feet[a]
Penetrations	All	Comply with Section R302.4	< 3 feet
		None required	3 feet[a]

For SI: 1 foot = 304.8 mm.
N/A = Not Applicable

a. For residential subdivisions where all dwellings *and accessory buildings* are equipped throughout with an automatic sprinkler systems installed in accordance with Section *R313*, the fire separation distance for nonrated exterior walls and rated projections shall be permitted to be reduced to 0 feet, and unlimited unprotected openings and penetrations shall be permitted, where the adjoining lot provides an open setback yard that is 6 feet or more in width on the opposite side of the property line.

as an extension of exterior walls or common walls in accordance with the following:

1. Where roof surfaces adjacent to the wall or walls are at the same elevation, the parapet shall extend not less than 30 inches (762 mm) above the roof surfaces.
2. Where roof surfaces adjacent to the wall or walls are at different elevations and the higher roof is not more than 30 inches (762 mm) above the lower roof, the parapet shall extend not less than 30 inches (762 mm) above the lower roof surface.

   Exception: A parapet is not required in the two cases above when the roof is covered with a minimum class C roof covering, and the roof decking or sheathing is of noncombustible materials or approved fire-retardant-treated wood for a distance of 4 feet (1219 mm) on each side of the wall or walls, or one layer of $^5/_8$-inch (15.9 mm) Type X gypsum board is installed directly beneath the roof decking or sheathing, supported by a minimum of nominal 2-inch (51 mm) ledgers attached to the sides of the roof framing members, for a minimum distance of 4 feet (1219 mm) on each side of the wall or walls and there are no openings or penetrations in the roof within 4 feet (1219 mm) of the common walls.
3. A parapet is not required where roof surfaces adjacent to the wall or walls are at different elevations and the higher roof is more than 30 inches (762 mm) above the lower roof. The common wall construction from the lower roof to the underside of the higher roof deck shall have not less than a 1-hour fire-resistance rating. The wall shall be rated for exposure from both sides.

R302.2.3 Parapet construction. Parapets shall have the same fire-resistance rating as that required for the supporting wall or walls. On any side adjacent to a roof surface, the parapet shall have noncombustible faces for the uppermost 18 inches (457 mm), to include counterflashing and coping materials. Where the roof slopes toward a parapet at slopes greater than 2 units vertical in 12 units horizontal (16.7-percent slope), the parapet shall extend to the same height as any portion of the roof within a distance of 3 feet (914 mm), but in no case shall the height be less than 30 inches (762 mm).

R302.2.4 Structural independence. Each individual *townhouse* shall be structurally independent.

Exceptions:

1. Foundations supporting exterior walls or common walls.
2. Structural roof and wall sheathing from each unit may fasten to the common wall framing.
3. Nonstructural wall and roof coverings.
4. Flashing at termination of roof covering over common wall.
5. Townhouses separated by a common 1-hour fire-resistance-rated wall as provided in Section R302.2.

R302.3 Two-family dwellings. Dwelling units in two-family dwellings shall be separated from each other by wall and/or floor assemblies having not less than a 1-hour fire-resistance rating when tested in accordance with ASTM E 119 or UL 263. Fire-resistance-rated floor/ceiling and wall assemblies shall extend to and be tight against the exterior wall, and wall assemblies shall extend from the foundation to the underside of the roof sheathing.

Exceptions:

1. A fire-resistance rating of $^1/_2$ hour shall be permitted in buildings equipped throughout with an automatic sprinkler system installed in accordance with NFPA 13.

2. Wall assemblies need not extend through attic spaces when the ceiling is protected by not less than $^5/_8$-inch (15.9 mm) Type X gypsum board and an attic draft stop constructed as specified in Section R302.12.1 is provided above and along the wall assembly separating the dwellings. The structural framing supporting the ceiling shall also be protected by not less than $^1/_2$-inch (12.7 mm) gypsum board or equivalent.

R302.3.1 Supporting construction. When floor assemblies are required to be fire-resistance rated by Section R302.3, the supporting construction of such assemblies shall have an equal or greater fire-resistance rating.

R302.4 Dwelling unit rated penetrations. Penetrations of wall or floor/ceiling assemblies required to be fire-resistance rated in accordance with Section R302.2 or R302.3 shall be protected in accordance with this section.

R302.4.1 Through penetrations. Through penetrations of fire-resistance-rated wall or floor assemblies shall comply with Section R302.4.1.1 or R302.4.1.2.

Exception: Where the penetrating items are steel, ferrous or copper pipes, tubes or conduits, the annular space shall be protected as follows:

1. In concrete or masonry wall or floor assemblies, concrete, grout or mortar shall be permitted where installed to the full thickness of the wall or floor assembly or the thickness required to maintain the fire-resistance rating, provided:
   1.1. The nominal diameter of the penetrating item is a maximum of 6 inches (152 mm); and
   1.2. The area of the opening through the wall does not exceed 144 square inches (92 900 mm^2).
2. The material used to fill the annular space shall prevent the passage of flame and hot gases sufficient to ignite cotton waste where subjected to ASTM E 119 or UL 263 time temperature fire conditions under a minimum positive pressure differential of 0.01 inch of water (3 Pa) at the location of the penetration for the time period equivalent to the fire-resistance rating of the construction penetrated.

R302.4.1.1 Fire-resistance-rated assembly. Penetrations shall be installed as tested in the approved fire-resistance-rated assembly.

R302.4.1.2 Penetration firestop system. Penetrations shall be protected by an approved penetration firestop system installed as tested in accordance with ASTM E 814 or UL 1479, with a minimum positive pressure differential of 0.01 inch of water (3 Pa) and shall have an F rating of not less than the required fire-resistance rating of the wall or floor/ceiling assembly penetrated.

R302.4.2 Membrane penetrations. Membrane penetrations shall comply with Section R302.4.1. Where walls are required to have a fire-resistance rating, recessed fixtures shall be installed so that the required fire-resistance rating will not be reduced.

Exceptions:

1. Membrane penetrations of maximum 2-hour fire-resistance-rated walls and partitions by steel electrical boxes that do not exceed 16 square inches (0.0103 m^2) in area provided the aggregate area of the openings through the membrane does not exceed 100 square inches (0.0645 m^2) in any 100 square feet (9.29 m)^2 of wall area. The annular space between the wall membrane and the box shall not exceed $^1/_8$ inch (3.1 mm). Such boxes on opposite sides of the wall shall be separated by one of the following:
   1.1. By a horizontal distance of not less than 24 inches (610 mm) where the wall or partition is constructed with individual noncommunicating stud cavities;
   1.2. By a horizontal distance of not less than the depth of the wall cavity when the wall cavity is filled with cellulose loose-fill, rockwool or slag mineral wool insulation;
   1.3. By solid fire blocking in accordance with Section R302.11;
   1.4. By protecting both boxes with listed putty pads; or
   1.5. By other listed materials and methods.
2. Membrane penetrations by listed electrical boxes of any materials provided the boxes have been tested for use in fire-resistance-rated assemblies and are installed in accordance with the instructions included in the listing. The annular space between the wall membrane and the box shall not exceed $^1/_8$ inch (3.1 mm) unless listed otherwise. Such boxes on opposite sides of the wall shall be separated by one of the following:
   2.1. By the horizontal distance specified in the listing of the electrical boxes;
   2.2. By solid fireblocking in accordance with Section R302.11;
   2.3. By protecting both boxes with listed putty pads; or
   2.4. By other listed materials and methods.
3. The annular space created by the penetration of a fire sprinkler provided it is covered by a metal escutcheon plate.

R302.5 Dwelling/garage opening/penetration protection. Openings and penetrations through the walls or ceilings separating the dwelling from the garage shall be in accordance with Sections R302.5.1 through R302.5.3.

R302.5.1 Opening protection. Openings from a private garage directly into a room used for sleeping purposes shall not be permitted. Other openings between the garage and residence shall be equipped with solid wood doors not

less than $1^3/_8$ inches (35 mm) in thickness, solid or honeycomb-core steel doors not less than $1^3/_8$ inches (35 mm) thick, or 20-minute fire-rated doors, equipped with self-closing *and self-latching* devices.

Exception: *Where the residence and the private garage are protected by an automatic residential fire sprinkler system in accordance with Sections R309.6 and R313, other door openings between the private garage and the residence need only be self-closing and self-latching. This exception shall not apply to rooms used for sleeping purposes.*

R302.5.2 Duct penetration. Ducts in the garage and ducts penetrating the walls or ceilings separating the dwelling from the garage shall be constructed of a minimum No. 26 gage (0.48 mm) sheet steel or other approved material and shall have no openings into the garage.

R302.5.3 Other penetrations. Penetrations through the separation required in Section R302.6 shall be protected as required by Section R302.11, Item 4.

R302.6 Dwelling/garage *and/or* carport fire separation. The garage *and/or carport* shall be separated as required by Table R302.6. Openings in garage walls shall comply with Section R302.5. This provision does not apply to garage walls that are perpendicular to the adjacent *dwelling unit* wall. *A separation is not required between the dwelling unit and a carport, provided the carport is entirely open on two or more sides and there are not enclosed areas above.*

R302.7 Under-stair protection. Enclosed accessible space under stairs shall have walls, under-stair surface and any soffits protected on the enclosed side with $^1/_2$-inch (12.7 mm) gypsum board.

R302.8 Foam plastics. For requirements for foam plastics see Section R316.

R302.9 Flame spread index and smoke-developed index for wall and ceiling finishes. Flame spread and smoke index for wall and ceiling finishes shall be in accordance with Sections R302.9.1 through R302.9.4.

R302.9.1 Flame spread index. Wall and ceiling finishes shall have a flame spread index of not greater than 200.

Exception: Flame spread index requirements for finishes shall not apply to trim defined as picture molds, chair rails, baseboards and handrails; to doors and windows or their frames; or to materials that are less than $^1/_{28}$ inch (0.91 mm) in thickness cemented to the surface of walls or ceilings if these materials exhibit flame spread index values no greater than those of paper of this thickness cemented to a noncombustible backing.

R302.9.2 Smoke-developed index. Wall and ceiling finishes shall have a smoke-developed index of not greater than 450.

R302.9.3 Testing. Tests shall be made in accordance with ASTM E 84 or UL 723.

R302.9.4 Alternative test method. As an alternative to having a flame spread index of not greater than 200 and a smoke-developed index of not greater than 450 when tested in accordance with ASTM E 84 or UL 723, wall and ceiling finishes shall be permitted to be tested in accordance with NFPA 286. Materials tested in accordance with NFPA 286 shall meet the following criteria:

The interior finish shall comply with the following:

1. During the 40 kW exposure, flames shall not spread to the ceiling.
2. The flame shall not spread to the outer extremity of the sample on any wall or ceiling.
3. Flashover, as defined in NFPA 286, shall not occur.
4. The peak heat release rate throughout the test shall not exceed 800 kW.
5. The total smoke released throughout the test shall not exceed 1,000 m^2.

R302.9.5 Stability. *Interior finish materials regulated by this chapter shall be applied or otherwise fastened in such a manner that such materials will not readily become detached where subjected to room temperatures of 200°F (93°C) for not less than 30 minutes.*

R302.10 Flame spread index and smoke-developed index for insulation. Flame spread and smoke-developed index for insulation shall be in accordance with Sections R302.10.1 through R302.10.5.

R302.10.1 Insulation. Insulation materials, including facings, such as vapor retarders and vapor-permeable membranes installed within floor/ceiling assemblies, roof/ceiling assemblies, wall assemblies, crawl spaces and attics shall have a flame spread index not to exceed 25 with an accompanying smoke-developed index not to

TABLE R302.6
DWELLING/GARAGE *AND/OR CARPORT* SEPARATION

SEPARATION	MATERIAL
From the residence and attics	Not less than $^1/_2$-inch gypsum board or equivalent applied to the garage side
From all habitable rooms above the garage *or carport*	Not less than $^5/_8$-inch Type X gypsum board or equivalent
Structure(s) supporting floor/ceiling assemblies used for separation required by this section	Not less than $^1/_2$-inch gypsum board or equivalent
Garages located less than 3 feet from a dwelling unit on the same lot	Not less than $^1/_2$-inch gypsum board or equivalent applied to the interior side of exterior walls that are within this area

For SI: 1 inch = 25.4 mm, 1 foot = 304.8 mm.

exceed 450 when tested in accordance with ASTM E 84 or UL 723.

Exceptions:

1. When such materials are installed in concealed spaces, the flame spread index and smoke-developed index limitations do not apply to the facings, provided that the facing is installed in substantial contact with the unexposed surface of the ceiling, floor or wall finish.
2. Cellulose loose-fill insulation, which is not spray applied, complying with the requirements of Section R302.10.3, shall only be required to meet the smoke-developed index of not more than 450.
3. Foam plastic insulation shall comply with Section R316.

R302.10.2 Loose-fill insulation. Loose-fill insulation materials that cannot be mounted in the ASTM E 84 or UL 723 apparatus without a screen or artificial supports shall comply with the flame spread and smoke-developed limits of Section R302.10.1 when tested in accordance with CAN/ULC S102.2.

Exception: Cellulose loose-fill insulation shall not be required to be tested in accordance with CAN/ULC S102.2, provided such insulation complies with the requirements of Section R302.10.1 and Section R302.10.3.

R302.10.3 Cellulose loose-fill insulation. Cellulose loose-fill insulation shall comply with CPSC 16 CFR, Parts 1209 and 1404. Each package of such insulating material shall be clearly labeled in accordance with CPSC 16 CFR, Parts 1209 and 1404.

R302.10.4 Exposed attic insulation. All exposed insulation materials installed on attic floors shall have a critical radiant flux not less than 0.12 watt per square centimeter.

R302.10.5 Testing. Tests for critical radiant flux shall be made in accordance with ASTM E 970.

R302.11 Fireblocking. In combustible construction, fireblocking shall be provided to cut off all concealed draft openings (both vertical and horizontal) and to form an effective fire barrier between stories, and between a top story and the roof space.

Fireblocking shall be provided in wood-frame construction in the following locations:

1. In concealed spaces of stud walls and partitions, including furred spaces and parallel rows of studs or staggered studs, as follows:
   1.1. Vertically at the ceiling and floor levels.
   1.2. Horizontally at intervals not exceeding 10 feet (3048 mm).
2. At all interconnections between concealed vertical and horizontal spaces such as occur at soffits, drop ceilings and cove ceilings.
3. In concealed spaces between stair stringers at the top and bottom of the run. Enclosed spaces under stairs shall comply with Section R302.7.
4. At openings around vents, pipes, ducts, cables and wires at ceiling and floor level, with an approved material to resist the free passage of flame and products of combustion. The material filling this annular space shall not be required to meet the ASTM E 136 requirements.
5. For the fireblocking of chimneys and fireplaces, see Section R1003.19.
6. Fireblocking of cornices of a two-family dwelling is required at the line of dwelling unit separation.

R302.11.1 Fireblocking materials. Except as provided in Section R302.11, Item 4, fireblocking shall consist of the following materials.

1. Two-inch (51 mm) nominal lumber.
2. Two thicknesses of 1-inch (25.4 mm) nominal lumber with broken lap joints.
3. One thickness of $^{23}/_{32}$-inch (18.3 mm) wood structural panels with joints backed by $^{23}/_{32}$-inch (18.3 mm) wood structural panels.
4. One thickness of $^{3}/_{4}$-inch (19.1 mm) particleboard with joints backed by $^{3}/_{4}$-inch (19.1 mm) particleboard.
5. One-half-inch (12.7 mm) gypsum board.
6. One-quarter-inch (6.4 mm) cement-based millboard.
7. Batts or blankets of mineral wool or glass fiber or other approved materials installed in such a manner as to be securely retained in place.
8. Cellulose insulation installed as tested for the specific application.

R302.11.1.1 Batts or blankets of mineral or glass fiber. Batts or blankets of mineral or glass fiber or other approved nonrigid materials shall be permitted for compliance with the 10-foot (3048 mm) horizontal fireblocking in walls constructed using parallel rows of studs or staggered studs.

R302.11.1.2 Unfaced fiberglass. Unfaced fiberglass batt insulation used as fireblocking shall fill the entire cross section of the wall cavity to a minimum height of 16 inches (406 mm) measured vertically. When piping, conduit or similar obstructions are encountered, the insulation shall be packed tightly around the obstruction.

R302.11.1.3 Loose-fill insulation material. Loose-fill insulation material shall not be used as a fireblock unless specifically tested in the form and manner intended for use to demonstrate its ability to remain in place and to retard the spread of fire and hot gases.

R302.11.2 Fireblocking integrity. The integrity of all fireblocks shall be maintained.

R302.12 Draftstopping. In combustible construction where there is usable space both above and below the concealed space of a floor/ceiling assembly, draftstops shall be installed so that the area of the concealed space does not exceed 1,000 square feet (92.9 m^2). Draftstopping shall divide the concealed space into approximately equal areas. Where the assembly is enclosed by a floor membrane above and a ceil-

ing membrane below, draftstopping shall be provided in floor/ceiling assemblies under the following circumstances:

1. Ceiling is suspended under the floor framing.
2. Floor framing is constructed of truss-type open-web or perforated members.

R302.12.1 Materials. Draftstopping materials shall not be less than $^1/_2$-inch (12.7 mm) gypsum board, $^3/_8$-inch (9.5 mm) wood structural panels or other approved materials adequately supported. Draftopping shall be installed parallel to the floor framing members unless otherwise approved by the building official. The integrity of the draftstops shall be maintained.

R302.13 Combustible insulation clearance. Combustible insulation shall be separated a minimum of 3 inches (76 mm) from recessed luminaires, fan motors and other heat-producing devices.

Exception: Where heat-producing devices are listed for lesser clearances, combustible insulation complying with the listing requirements shall be separated in accordance with the conditions stipulated in the listing.

Recessed luminaires installed in the *building envelope* shall meet *or exceed* the requirements *specified in the California Energy Code for recessed luminaires installed in insulated ceilings.*

SECTION R303
LIGHT, VENTILATION AND HEATING

R303.1 Habitable rooms. All habitable rooms shall have an aggregate glazing area of not less than 8 percent of the floor area of such rooms. Natural ventilation shall be through windows, doors, louvers or other approved openings to the outdoor air. Such openings shall be provided with ready access or shall otherwise be readily controllable by the building occupants. The minimum openable area to the outdoors shall be 4 percent of the floor area being ventilated.

Exceptions:

1. The glazed areas need not be openable where the opening is not required by Section R310 and a whole-house mechanical ventilation system is installed in accordance with the *California Mechanical Code.*
2. The glazed areas need not be installed in rooms where Exception 1 above is satisfied and artificial light is provided capable of producing an average illumination of 6 footcandles (65 lux) over the area of the room at a height of 30 inches (762 mm) above the floor level.
3. Use of sunroom and patio covers, as defined in Section R202, shall be permitted for natural ventilation if in excess of 40 percent of the exterior sunroom walls are open, or are enclosed only by insect screening.
4. *The windows, doors, louvers and other approved closeable openings not required by Section R310 may open into a passive solar energy collector for ventilation required by this section. The area of ventilation openings to the outside of the passive solar energy collector shall be increased to compensate for the openings required by the interior space.*
5. *Glazed openings may open into a passive solar energy collector provided the area of exterior glazed opening(s) into the passive solar energy collector is increased to compensate for the area required by the interior space.*

R303.2 Adjoining rooms. For the purpose of determining light and ventilation requirements, any room shall be considered as a portion of an adjoining room when at least one-half of the area of the common wall is open and unobstructed and provides an opening of not less than one-tenth of the floor area of the interior room but not less than 25 square feet (2.3 m^2).

Exception: Openings required for light and/or ventilation shall be permitted to open into a sunroom with thermal isolation or a patio cover, provided that there is an openable area between the adjoining room and the sunroom or patio cover of not less than one-tenth of the floor area of the interior room but not less than 20 square feet (2 m^2). The minimum openable area to the outdoors shall be based upon the total floor area being ventilated.

R303.3 Bathrooms. Bathrooms, water closet compartments and other similar rooms shall be provided with aggregate glazing area in windows of not less than 3 square feet (0.3 m^2), one-half of which must be openable.

Exception: The glazed areas shall not be required where artificial light and a local exhaust system are provided. The minimum local exhaust rates shall be *50 cubic feet per minute (25 L/s) for intermittent ventilation or 20 cubic feet per minute (10 L/s) for continuous ventilation* in accordance with the *California Mechanical Code, Chapter 4.* Exhaust air from the space shall be exhausted directly to the outdoors.

R303.3.1 Bathroom exhaust fans. *Each bathroom containing a bathtub, shower or tub/shower combination shall be mechanically ventilated for purposes of humidity control in accordance with the California Mechanical Code, Chapter 4; and the California Green Building Standards Code, Chapter 4, Division 4.5.*

Note: Window operation is not a permissible method of providing bathroom exhaust for humidity control.

R303.4 Ventilation. *Ventilation air rates shall be in compliance with the California Mechanical Code.*

R303.5 Opening location. Outdoor intake and exhaust openings shall be located in accordance with Sections R303.5.1 and R303.5.2.

R303.5.1 Intake openings. Mechanical and gravity outdoor air intake openings shall be located a minimum of 10 feet (3048 mm) from any hazardous or noxious contaminant, such as vents, chimneys, plumbing vents, streets, alleys, parking lots and loading docks, except as otherwise specified in this code. Where a source of contaminant is located within 10 feet (3048 mm) of an intake opening,

such opening shall be located a minimum of 3 feet (914 mm) below the contaminant source.

For the purpose of this section, the exhaust from dwelling unit toilet rooms, bathrooms and kitchens shall not be considered as hazardous or noxious.

R303.5.2 Exhaust openings. Exhaust air shall not be directed onto walkways.

R303.6 Outside opening protection. Air exhaust and intake openings that terminate outdoors shall be protected with corrosion-resistant screens, louvers or grilles having a minimum opening size of $^1/_4$ inch (6 mm) and a maximum opening size of $^1/_2$ inch (13 mm), in any dimension. Openings shall be protected against local weather conditions. Outdoor air exhaust and intake openings shall meet the provisions for exterior wall opening protectives in accordance with this code.

R303.7 Stairway illumination. All interior and exterior stairways shall be provided with a means to illuminate the stairs, including the landings and treads. Interior stairways shall be provided with an artificial light source located in the immediate vicinity of each landing of the stairway. For interior stairs the artificial light sources shall be capable of illuminating treads and landings to levels not less than 1 footcandle (11 lux) measured at the center of treads and landings. Exterior stairways shall be provided with an artificial light source located in the immediate vicinity of the top landing of the stairway. Exterior stairways providing access to a basement from the outside grade level shall be provided with an artificial light source located in the immediate vicinity of the bottom landing of the stairway.

Exception: An artificial light source is not required at the top and bottom landing, provided an artificial light source is located directly over each stairway section.

R303.7.1 Light activation. Where lighting outlets are installed in interior stairways, there shall be a wall switch at each floor level to control the lighting outlet where the stairway has six or more risers. The illumination of exterior stairways shall be controlled from inside the dwelling unit.

Exception: Lights that are continuously illuminated or automatically controlled.

R303.8 Required glazed openings. Required glazed openings shall open directly onto a street or public alley, or a *yard* or court located on the same lot as the building.

Exceptions:

1. Required glazed openings may face into a roofed porch where the porch abuts a street, yard or court and the longer side of the porch is at least 65 percent unobstructed and the ceiling height is not less than 7 feet (2134 mm).
2. Eave projections shall not be considered as obstructing the clear open space of a yard or court.
3. Required glazed openings may face into the area under a deck, balcony, bay or floor cantilever provided a clear vertical space at least 36 inches (914 mm) in height is provided.
4. *Glazed openings covered by a passive solar energy collector in accordance with Section R303.1, Exception 5.*

R303.8.1 Sunroom additions. Required glazed openings shall be permitted to open into sunroom additions or patio covers that abut a street, yard or court if in excess of 40 percent of the exterior sunroom walls are open, or are enclosed only by insect screening, and the ceiling height of the sunroom is not less than 7 feet (2134 mm).

R303.8.1.1 Passive solar energy collectors. *When a passive solar energy collector is designed as a conditioned area it shall comply with the California Energy Code, Title 24, Part 6. Nonconditioned passive solar energy collectors are exempt from Title 24, Part 6.*

R303.9 Required heating. When the winter design temperature in Table R301.2(1) is below 60°F (16°C), every dwelling unit shall be provided with heating facilities capable of maintaining a minimum room temperature of 68°F (20°C) at a point 3 feet (914 mm) above the floor and 2 feet (610 mm) from exterior walls in all habitable rooms at the design temperature. The installation of one or more portable space heaters shall not be used to achieve compliance with this section.

Note: See Section R301.1.1.1 for limited-density owner-built rural dwellings.

SECTION R304
MINIMUM ROOM AREAS

R304.1 Minimum area. Every dwelling unit shall have at least one habitable room that shall have not less than 120 square feet (11 m^2) of gross floor area.

R304.2 Other rooms. Other habitable rooms shall have a floor area of not less than 70 square feet (6.5 m^2).

Exceptions: Kitchens.

R304.3 Minimum dimensions. Habitable rooms shall not be less than 7 feet (2134 mm) in any horizontal dimension.

Exceptions:

1. *Kitchens.*
2. *Limited-density owner-built rural dwellings. See Section R301.1.1.1.*

R304.4 Height effect on room area. Portions of a room with a sloping ceiling measuring less than 5 feet (1524 mm) or a furred ceiling measuring less than 7 feet (2134 mm) from the finished floor to the finished ceiling shall not be considered as contributing to the minimum required habitable area for that room.

R304.5 Efficiency dwelling units. (HCD 1) *Unless modified by local ordinance pursuant to Health and Safety Code Section 17958.1, efficiency dwelling units shall comply with the following:*

1. *The unit shall have a living room of not less than 220 square feet (20.4 m^2) of floor area. An additional 100 square feet (9.3 m^2) of floor area shall be provided for each occupant of such unit in excess of two.*
2. *The unit shall be provided with a separate closet.*

3. *The unit shall be provided with a kitchen sink, cooking appliance and refrigeration facilities, each having a clear working space of not less than 30 inches (762 mm) in front. Light and ventilation conforming to this code shall be provided.*

4. *The unit shall be provided with a separate bathroom containing a water closet, lavatory and bathtub or shower.*

SECTION R305
CEILING HEIGHT

R305.1 Minimum height. Habitable space, hallways, bathrooms, toilet rooms, laundry rooms and portions of basements containing these spaces shall have a ceiling height of not less than 7 feet (2134 mm).

Exceptions:

1. For rooms with sloped ceilings, at least 50 percent of the required floor area of the room must have a ceiling height of at least 7 feet (2134 mm) and no portion of the required floor area may have a ceiling height of less than 5 feet (1524 mm).
2. Bathrooms shall have a minimum ceiling height of 6 feet 8 inches (2032 mm) at the center of the front clearance area for fixtures. The ceiling height above fixtures shall be such that the fixture is capable of being used for its intended purpose. A shower or tub equipped with a showerhead shall have a minimum ceiling height of 6 feet 8 inches (2032 mm) above a minimum area 30 inches (762 mm) by 30 inches (762 mm) at the showerhead.

R305.1.1 Basements. Portions of basements that do not contain habitable space, hallways, bathrooms, toilet rooms and laundry rooms shall have a ceiling height of not less than 6 feet 8 inches (2032 mm).

Exception: Beams, girders, ducts or other obstructions may project to within 6 feet 4 inches (1931 mm) of the finished floor.

SECTION R306
SANITATION

R306.1 Toilet facilities. Every dwelling unit shall be provided with a water closet, lavatory, and a bathtub or shower.

R306.2 Kitchen. Each dwelling unit shall be provided with a kitchen area and every kitchen area shall be provided with a sink.

R306.3 Sewage disposal. All plumbing fixtures shall be connected to a sanitary sewer or to an approved private sewage disposal system.

R306.4 Water supply to fixtures. All plumbing fixtures shall be connected to an approved water supply. Kitchen sinks, lavatories, bathtubs, showers, bidets, laundry tubs and washing machine outlets shall be provided with hot and cold water.

SECTION R307
TOILET, BATH AND SHOWER SPACES

R307.1 Space required. Fixtures shall be spaced in accordance with the *California Plumbing Code.*

R307.2 Bathtub and shower spaces. Bathtub and shower floors and walls above bathtubs with installed shower heads and in shower compartments shall be finished with a nonabsorbent surface. Such wall surfaces shall extend to a height of not less than 6 feet (1829 mm) above the floor.

SECTION R308
GLAZING

R308.1 Identification. Except as indicated in Section R308.1.1 each pane of glazing installed in hazardous locations as defined in Section R308.4 shall be provided with a manufacturer's designation specifying who applied the designation, designating the type of glass and the safety glazing standard with which it complies, which is visible in the final installation. The designation shall be acid etched, sandblasted, ceramic-fired, laser etched, embossed, or be of a type which once applied cannot be removed without being destroyed. A label shall be permitted in lieu of the manufacturer's designation.

Exceptions:

1. For other than tempered glass, manufacturer's designations are not required provided the building official approves the use of a certificate, affidavit or other evidence confirming compliance with this code.
2. Tempered spandrel glass is permitted to be identified by the manufacturer with a removable paper designation

R308.1.1 Identification of multiple assemblies. Multipane assemblies having individual panes not exceeding 1 square foot (0.09 m^2) in exposed area shall have at least one pane in the assembly identified in accordance with Section R308.1. All other panes in the assembly shall be labeled "CPSC 16 CFR 1201" or "ANSI Z97.1" as appropriate.

R308.2 Louvered windows or jalousies. Regular, float, wired or patterned glass in jalousies and louvered windows shall be no thinner than nominal $^3/_{16}$ inch (5 mm) and no longer than 48 inches (1219 mm). Exposed glass edges shall be smooth.

R308.2.1 Wired glass prohibited. Wired glass with wire exposed on longitudinal edges shall not be used in jalousies or louvered windows.

R308.3 Human impact loads. Individual glazed areas, including glass mirrors in hazardous locations such as those indicated as defined in Section R308.4, shall pass the test requirements of Section R308.3.1.

Exceptions:

1. Louvered windows and jalousies shall comply with Section R308.2.

2. Mirrors and other glass panels mounted or hung on a surface that provides a continuous backing support.
3. Glass unit masonry complying with Section R610.

R308.3.1 Impact test. Where required by other sections of the code, glazing shall be tested in accordance with CPSC 16 CFR 1201. Glazing shall comply with the test criteria for Category II unless otherwise indicated in Table R308.3.1(1).

Exception: Glazing not in doors or enclosures for hot tubs, whirlpools, saunas, steam rooms, bathtubs and showers shall be permitted to be tested in accordance with ANSI Z97.1. Glazing shall comply with the test criteria for Class A unless indicated in Table R308.3.1 (2).

R308.4 Hazardous locations. The locations specified in Sections R308.4.1 through R308.4.7 shall be considered specific hazardous locations for the purposes of glazing.

R308.4.1 Glazing in doors. Glazing in all fixed and operable panels of swinging, sliding and bifold doors shall be considered a hazardous location.

Exceptions:

1. Glazed openings of a size through which a 3-inch-diameter (76 mm) sphere is unable to pass.
2. Decorative glazing.

R308.4.2 Glazing adjacent doors. Glazing in an individual fixed or operable panel adjacent to a door where the nearest vertical edge of the glazing is within a 24-inch (610 mm) arc of either vertical edge of the door in a closed position and where the bottom exposed edge of the glazing is less than 60 inches (1524 mm) above the floor or walking surface shall be considered a hazardous location.

Exceptions:

1. Decorative glazing.
2. When there is an intervening wall or other permanent barrier between the door and the glazing.
3. Glazing in walls on the latch side of and perpendicular to the plane of the door in a closed position.
4. Where access through the door is to a closet or storage area 3 feet (914 mm) or less in depth. Glazing in this application shall comply with section R308.4.3.
5. Glazing that is adjacent to the fixed panel of patio doors.

R308.4.3 Glazing in windows. Glazing in an individual fixed or operable panel that meets all of the following conditions shall be considered a hazardous location:

1. The exposed area of an individual pane is larger than 9 square feet (0.836 m^2);
2. The bottom edge of the glazing is less than 18 inches (457 mm) above the floor;
3. The top edge of the glazing is more than 36 inches (914 mm) above the floor; and
4. One or more walking surfaces are within 36 inches (914 mm), measured horizontally and in a straight line, of the glazing.

Exceptions:

1. Decorative glazing.
2. When a horizontal rail is installed on the accessible side(s) of the glazing 34 to 38 inches (864 to 965 mm) above the walking surface. The rail shall be capable of withstanding a horizontal load of 50 pounds per linear foot (730 N/m) without contacting the glass and be a minimum of $1^1/_2$ inches (38 mm) in cross sectional height.
3. Outboard panes in insulating glass units and other multiple glazed panels when the bottom edge of the glass is 25 feet (7620 mm) or more above grade, a roof, walking surfaces or other horizontal [within 45 degrees (0.79 rad) of horizontal] surface adjacent to the glass exterior.

TABLE R308.3.1(1)
MINIMUM CATEGORY CLASSIFICATION OF GLAZING USING CPSC 16 CFR 1201

EXPOSED SURFACE AREA OF ONE SIDE OF ONE LITE	GLAZING IN STORM OR COMBINATION DOORS (Category Class)	GLAZING IN DOORS (Category Class)	GLAZED PANELS REGULATED BY SECTION R308.4.3 (Category Class)	GLAZED PANELS REGULATED BY SECTION R308.4.2 (Category Class)	GLAZING IN DOORS AND ENCLOSURES REGULATED BY SECTION 308.4.5 (Category Class)	SLIDING GLASS DOORS PATIO TYPE (Category Class)
9 square feet or less	I	I	NR	I	II	II
More than 9 square feet	II	II	II	II	II	II

For SI: 1 square foot = 0.0929 m^2.
NR means "No Requirement."

TABLE R308.3.1(2)
MINIMUM CATEGORY CLASSIFICATION OF GLAZING USING ANSI Z97.1

EXPOSED SURFACE AREA OF ONE SIDE OF ONE LITE	GLAZED PANELS REGULATED BY SECTION R308.4.3 (Category Class)	GLAZED PANELS REGULATED BY SECTION R308.4.2 (Category Class)	DOORS AND ENCLOSURES REGULATED BY SECTION R308.4.5[a] (Category Class)
9 square feet or less	No requirement	B	A
More than 9 square feet	A	A	A

For SI: 1 square foot = 0.0929 m^2.
a. Use is permitted only by the exception to Section R308.3.1.

R308.4.4 Glazing in guards and railings. Glazing in guards and railings, including structural baluster panels and nonstructural in-fill panels, regardless of area or height above a walking surface shall be considered a hazardous location.

R308.4.5 Glazing and wet surfaces. Glazing in walls, enclosures or fences containing or facing hot tubs, spas, whirlpools, saunas, steam rooms, bathtubs, showers and indoor or outdoor swimming pools where the bottom exposed edge of the glazing is less than 60 inches (1524 mm) measured vertically above any standing or walking surface shall be considered a hazardous location. This shall apply to single glazing and all panes in multiple glazing.

Exception: Glazing that is more than 60 inches (1524 mm), measured horizontally and in a straight line, from the water's edge of a bathtub, hot tub, spa, whirlpool, or swimming pool.

R308.4.6 Glazing adjacent stairs and ramps. Glazing where the bottom exposed edge of the glazing is less than 36 inches (914 mm) above the plane of the adjacent walking surface of stairways, landings between flights of stairs and ramps shall be considered a hazardous location.

Exceptions:

1. When a rail is installed on the accessible side(s) of the glazing 34 to 38 inches (864 to 965 mm) above the walking surface.The rail shall be capable of withstanding a horizontal load of 50 pounds per linear foot (730 N/m) without contacting the glass and be a minimum of $1^1/_2$ inches (38 mm) in cross sectional height.
2. Glazing 36 inches (914 mm) or more measured horizontally from the walking surface.

R308.4.7 Glazing adjacent to the bottom stair landing. Glazing adjacent to the landing at the bottom of a stairway where the glazing is less than 36 inches (914 mm) above the landing and within 60 inches (1524 mm) horizontally of the bottom tread shall be considered a hazardous location.

Exception: The glazing is protected by a guard complying with Section R312 and the plane of the glass is more than 18 inches (457 mm) from the guard.

R308.5 Site built windows. Site built windows shall comply with Section 2404 of the *California Building Code.*

R308.6 Skylights and sloped glazing. Skylights and sloped glazing shall comply with the following sections.

R308.6.1 Definitions.

SKYLIGHT, UNIT. A factory assembled, glazed fenestration unit, containing one panel of glazing material, that allows for natural daylighting through an opening in the roof assembly while preserving the weather-resistant barrier of the roof.

SKYLIGHTS AND SLOPED GLAZING. Glass or other transparent or translucent glazing material installed at a slope of 15 degrees (0.26 rad) or more from vertical. Glazing materials in skylights, including unit skylights, tubular daylighting devices, solariums, sunrooms, roofs and sloped walls are included in this definition.

TUBULAR DAYLIGHTING DEVICE (TDD). A nonoperable fenestration unit primarily designed to transmit daylight from a roof surface to an interior ceiling via a tubular conduit. The basic unit consists of an exterior glazed weathering surface, a light-transmitting tube with a reflective interior surface, and an interior-sealing device such as a translucent ceiling panel. The unit may be factory assembled, or field assembled from a manufactured kit.

R308.6.2 Permitted materials. The following types of glazing may be used:

1. Laminated glass with a minimum 0.015-inch (0.38 mm) polyvinyl butyral interlayer for glass panes 16 square feet (1.5 m^2) or less in area located such that the highest point of the glass is not more than 12 feet (3658 mm) above a walking surface or other accessible area; for higher or larger sizes, the minimum interlayer thickness shall be 0.030 inch (0.76 mm).
2. Fully tempered glass.
3. Heat-strengthened glass.
4. Wired glass.
5. Approved rigid plastics.

R308.6.3 Screens, general. For fully tempered or heat-strengthened glass, a retaining screen meeting the requirements of Section R308.6.7 shall be installed below the glass, except for fully tempered glass that meets either condition listed in Section R308.6.5.

R308.6.4 Screens with multiple glazing. When the inboard pane is fully tempered, heat-strengthened or wired glass, a retaining screen meeting the requirements of Section R308.6.7 shall be installed below the glass, except for either condition listed in Section R308.6.5. All other panes in the multiple glazing may be of any type listed in Section R308.6.2.

R308.6.5 Screens not required. Screens shall not be required when fully tempered glass is used as single glazing or the inboard pane in multiple glazing and either of the following conditions are met:

1. Glass area 16 square feet (1.49 m^2) or less. Highest point of glass not more than 12 feet (3658 mm) above a walking surface or other accessible area, nominal glass thickness not more than $^3/_{16}$ inch (4.8 mm), and (for multiple glazing only) the other pane or panes fully tempered, laminated or wired glass.
2. Glass area greater than 16 square feet (1.49 m^2). Glass sloped 30 degrees (0.52 rad) or less from vertical, and highest point of glass not more than 10 feet (3048 mm) above a walking surface or other accessible area.

R308.6.6 Glass in greenhouses. Any glazing material is permitted to be installed without screening in the sloped areas of greenhouses, provided the greenhouse height at the ridge does not exceed 20 feet (6096 mm) above grade.

3750

R308.6.7 Screen characteristics. The screen and its fastenings shall be capable of supporting twice the weight of the glazing, be firmly and substantially fastened to the framing members, and have a mesh opening of no more than 1 inch by 1 inch (25 mm by 25 mm).

R308.6.8 Curbs for skylights. All unit skylights installed in a roof with a pitch flatter than three units vertical in 12 units horizontal (25-percent slope) shall be mounted on a curb extending at least 4 inches (102 mm) above the plane of the roof unless otherwise specified in the manufacturer's installation instructions.

R308.6.9 Testing and labeling. Unit skylights and tubular daylighting devices shall be tested by an approved independent laboratory, and bear a label identifying manufacturer, performance grade rating and approved inspection agency to indicate compliance with the requirements of AAMA/WDMA/CSA 101/I.S.2/A440.

SECTION R309
GARAGES AND CARPORTS

R309.1 Floor surface. Garage floor surfaces shall be of approved noncombustible material.

The area of floor used for parking of automobiles or other vehicles shall be sloped to facilitate the movement of liquids to a drain or toward the main vehicle entry doorway.

R309.2 Carports. Carports shall be open on at least two sides. Carport floor surfaces shall be of approved noncombustible material. Carports not open on at least two sides shall be considered a garage and shall comply with the provisions of this section for garages.

Exception: Asphalt surfaces shall be permitted at ground level in carports.

The area of floor used for parking of automobiles or other vehicles shall be sloped to facilitate the movement of liquids to a drain or toward the main vehicle entry doorway.

R309.3 Flood hazard areas. For buildings located in flood hazard areas as established by Table R301.2(1), garage floors shall be:

1. Elevated to or above the design flood elevation as determined in Section R322; or
2. Located below the design flood elevation provided they are at or above grade on at least one side, are used solely for parking, building access or storage, meet the requirements of Section R322 and are otherwise constructed in accordance with this code.

R309.4 Automatic garage door openers. Automatic garage door openers, if provided, shall be listed and labeled in accordance with UL 325. *See Health and Safety Code Sections 19890 and 19891 for additional provisions for residential garage door openers.*

R309.5 Fire sprinklers *location on property*. Private garages shall be protected by fire sprinklers where the garage wall has been designed based on Table R302.1(2), Footnote a. Sprinklers in garages shall be connected to an automatic sprinkler system that complies with Section *R313*. Garage sprinklers shall be residential sprinklers or quick-response sprinklers, designed to provide a density of 0.05 gpm/ft^2. Garage doors shall not be considered obstructions with respect to sprinkler placement.

R309.6 Fire sprinklers attached garages, and carports with habitable space above. *Attached garages, and carports with habitable space above shall be protected by fire sprinklers in accordance with this section and Section R313. Protection shall be provided in accordance with one of the following:*

1. *Residential sprinklers installed in accordance with their listing.*
2. *Extended coverage sprinklers discharging water not less than their listed flow rate for Light Hazard in accordance with NFPA 13.*
3. *Quick-response spray sprinklers at light hazard spacing in accordance with NFPA 13 designed to discharge at 0.05 gpm/ft^2 density (minimum).*

The system demand shall be permitted to be limited to the number of sprinklers in the compartment but shall not exceed two sprinklers for hydraulic calculation purposes. Garage doors shall not be considered obstructions and shall be permitted to be ignored for placement and calculation of sprinklers.

Exception: *An automatic residential fire sprinkler system shall not be required when additions or alterations are made to existing carports and/or garages that do not have an automatic residential fire sprinkler system installed in accordance with this section.*

R309.7 Extension garage door springs. *Every extension garage door spring sold or offered for sale, whether new or sold as a replacement, or installed in any garage or carport which is accessory to a dwelling covered by this code, shall conform to the requirements for garage door springs located in Section 1211 of the California Building Code.*

SECTION R310
EMERGENCY ESCAPE AND RESCUE OPENINGS

R310.1 Emergency escape and rescue required. Basements, habitable attics and every sleeping room shall have at least one operable emergency escape and rescue opening. Where basements contain one or more sleeping rooms, emergency egress and rescue openings shall be required in each sleeping room. Where emergency escape and rescue openings are provided they shall have *the bottom of the clear opening not greater than 44 inches (1118 mm) measured from the floor.* Where a door opening having a threshold below the adjacent ground elevation serves as an emergency escape and rescue opening and is provided with a bulkhead enclosure, the bulkhead enclosure shall comply with Section R310.3. The net clear opening dimensions required by this section shall be obtained by the normal operation of the emergency escape and rescue opening from the inside. Emergency escape and rescue openings with a finished sill height below the adjacent ground elevation shall be provided with a window well in accordance with Section R310.2. Emergency escape and rescue openings shall open directly into a public way, or to a yard or court that opens to a public way.

Exception: Basements used only to house mechanical equipment and not exceeding total floor area of 200 square feet (18.58 m^2).

R310.1.1 Minimum opening area. All emergency escape and rescue openings shall have a minimum net clear opening of 5.7 square feet (0.530 m^2).

Exception: Grade floor openings shall have a minimum net clear opening of 5 square feet (0.465 m^2).

R310.1.2 Minimum opening height. The minimum net clear opening height shall be 24 inches (610 mm).

R310.1.3 Minimum opening width. The minimum net clear opening width shall be 20 inches (508 mm).

R310.1.4 Operational constraints. Emergency escape and rescue openings shall be *maintained free of any obstructions other than those allowed by this section and shall be* operational from the inside of the room without the use of keys, tools or special knowledge.

R310.2 Window wells. The minimum horizontal area of the window well shall be 9 square feet (0.9 m^2), with a minimum horizontal projection and width of 36 inches (914 mm). The area of the window well shall allow the emergency escape and rescue opening to be fully opened.

Exception: The ladder or steps required by Section R310.2.1 shall be permitted to encroach a maximum of 6 inches (152 mm) into the required dimensions of the window well.

R310.2.1 Ladder and steps. Window wells with a vertical depth greater than 44 inches (1118 mm) shall be equipped with a permanently affixed ladder or steps usable with the window in the fully open position. Ladders or steps required by this section shall not be required to comply with Sections R311.7 and R311.8. Ladders or rungs shall have an inside width of at least 12 inches (305 mm), shall project at least 3 inches (76 mm) from the wall and shall be spaced not more than 18 inches (457 mm) on center vertically for the full height of the window well.

R310.2.2 Drainage. Window wells shall be designed for proper drainage by connecting to the building's foundation drainage system required by Section R405.1 or by an approved alternative method.

Exception: A drainage system for window wells is not required when the foundation is on well-drained soil or sand-gravel mixture soils according to the United Soil Classification System, Group I Soils, as detailed in Table R405.1.

R310.3 Bulkhead enclosures. Bulkhead enclosures shall provide direct access to the basement. The bulkhead enclosure with the door panels in the fully open position shall provide the minimum net clear opening required by Section R310.1.1. Bulkhead enclosures shall also comply with Section R311.7.10.2.

R310.4 Bars, grilles, covers and screens. Bars, grilles, covers, screens or similar devices are permitted to be placed over emergency escape and rescue openings, bulkhead enclosures, or window wells that serve such openings, provided the minimum net clear opening size complies with Sections R310.1.1 to R310.1.3, and such devices shall be releasable or removable from the inside without the use of a key, tool, special knowledge or force greater than that which is required for normal operation of the escape and rescue opening. *The release mechanism shall be maintained operable at all times.*

Such bars, grills, grates or any similar devices shall be equipped with an approved exterior release device for use by the fire department only when required by the authority having jurisdiction.

Where security bars (burglar bars) are installed on emergency egress and rescue windows or doors, on or after July 1, 2000, such devices shall comply with California Building Standards Code, Part 12, Chapter 12-3 and other applicable provisions of this code.

SECTION R311
MEANS OF EGRESS

R311.1 Means of egress. All dwellings shall be provided with a means of egress as provided in this section. The means of egress shall provide a continuous and unobstructed path of vertical and horizontal egress travel from all portions of the dwelling to the exterior of the dwelling at the required egress door without requiring travel through a garage.

R311.2 Egress door. At least one egress door shall be provided for each dwelling unit. The egress door shall be side-hinged, and shall provide a minimum clear width of 32 inches (813 mm) when measured between the face of the door and the stop, with the door open 90 degrees (1.57 rad). The minimum clear height of the door opening shall not be less than 78 inches (1981 mm) in height measured from the top of the threshold to the bottom of the stop. Other doors shall not be required to comply with these minimum dimensions. Egress doors shall be readily openable from inside the dwelling without the use of a key or special knowledge or effort.

R311.3 Floors and landings at exterior doors. There shall be a landing or floor on each side of each exterior door. The width of each landing shall not be less than the door served. Every landing shall have a minimum dimension of 36 inches (914 mm) measured in the direction of travel. Exterior landings shall be permitted to have a slope not to exceed $^1/_4$ unit vertical in 12 units horizontal (2-percent).

Exception: Exterior balconies less than 60 square feet (5.6 m^2) and only accessible from a door are permitted to have a landing less than 36 inches (914 mm) measured in the direction of travel.

R311.3.1 Floor elevations at the required egress doors. Landings or finished floors at the required egress door shall not be more than $1^1/_2$ inches (38 mm) lower than the top of the threshold.

Exception: The landing or floor on the exterior side shall not be more than $7^3/_4$ inches (196 mm) below the top of the threshold provided the door does not swing over the landing or floor.

Where exterior landings or floors serving the required egress door are not at grade, they shall be provided with access to grade by means of a ramp in accordance with

3752

Section R311.8 or a stairway in accordance with Section R311.7.

R311.3.2 Floor elevations for other exterior doors. Doors other than the required egress door shall be provided with landings or floors not more than $7^3/_4$ inches (196 mm) below the top of the threshold.

Exception: A landing is not required where a stairway of two or fewer risers is located on the exterior side of the door, provided the door does not swing over the stairway.

R311.3.3 Storm and screen doors. Storm and screen doors shall be permitted to swing over all exterior stairs and landings.

R311.4 Vertical egress. Egress from habitable levels including habitable attics and basements not provided with an egress door in accordance with Section R311.2 shall be by *one or more ramps* in accordance with Section R311.8 or *one or more stairways* in accordance with Section R311.7 or both. *For habitable levels or basements located more than one story above or more than one story below an egress door, the maximum travel distance from any occupied point to a stairway or ramp that provides egress from such habitable level or basement, shall not exceed 50 feet (15 240 mm).*

R311.5 Construction.

R311.5.1 Attachment. Exterior landings, decks, balconies, stairs and similar facilities shall be positively anchored to the primary structure to resist both vertical and lateral forces or shall be designed to be self-supporting. Attachment shall not be accomplished by use of toenails or nails subject to withdrawal.

R311.6 Hallways. The minimum width of a hallway shall be not less than 3 feet (914 mm).

R311.7 Stairways.

R311.7.1 Width. Stairways shall not be less than 36 inches (914 mm) in clear width at all points above the permitted handrail height and below the required headroom height. Handrails shall not project more than 4.5 inches (114 mm) on either side of the stairway and the minimum clear width of the stairway at and below the handrail height, including treads and landings, shall not be less than $31^1/_2$ inches (787 mm) where a handrail is installed on one side and 27 inches (698 mm) where handrails are provided on both sides.

Exception: The width of spiral stairways shall be in accordance with Section R311.7.10.1.

R311.7.2 Headroom. The minimum headroom in all parts of the stairway shall not be less than 6 feet 8 inches (2032 mm) measured vertically from the sloped line adjoining the tread nosing or from the floor surface of the landing or platform on that portion of the stairway.

Exception: Where the nosings of treads at the side of a flight extend under the edge of a floor opening through which the stair passes, the floor opening shall be allowed to project horizontally into the required headroom a maximum of $4^3/_4$ inches (121 mm).

R311.7.3 Vertical rise. A flight of stairs shall not have a vertical rise larger than 12 feet (3658 mm) between floor levels or landings.

R311.7.4 Walkline. The walkline across winder treads shall be concentric to the curved direction of travel through the turn and located 12 inches (305 mm) from the side where the winders are narrower. The 12-inch (305 mm) dimension shall be measured from the widest point of the clear stair width at the walking surface of the winder. If winders are adjacent within the flight, the point of the widest clear stair width of the adjacent winders shall be used.

R311.7.5 Stair treads and risers. Stair treads and risers shall meet the requirements of this section. For the purposes of this section all dimensions and dimensioned surfaces shall be exclusive of carpets, rugs or runners.

R311.7.5.1 Risers. The maximum riser height shall be $7^3/_4$ inches (196 mm). The riser shall be measured vertically between leading edges of the adjacent treads. The greatest riser height within any flight of stairs shall not exceed the smallest by more than $^3/_8$ inch (9.5 mm). Risers shall be vertical or sloped from the underside of the nosing of the tread above at an angle not more than 30 degrees (0.51 rad) from the vertical. Open risers are permitted provided that the opening between treads does not permit the passage of a 4-inch-diameter (102 mm) sphere.

Exception: The opening between adjacent treads is not limited on stairs with a total rise of 30 inches (762 mm) or less.

R311.7.5.2 Treads. The minimum tread depth shall be 10 inches (254 mm). The tread depth shall be measured horizontally between the vertical planes of the foremost projection of adjacent treads and at a right angle to the tread's leading edge. The greatest tread depth within any flight of stairs shall not exceed the smallest by more than $^3/_8$ inch (9.5 mm).

R311.7.5.2.1 Winder treads. Winder treads shall have a minimum tread depth of 10 inches (254 mm) measured between the vertical planes of the foremost projection of adjacent treads at the intersections with the walkline. Winder treads shall have a minimum tread depth of 6 inches (152 mm) at any point within the clear width of the stair. Within any flight of stairs, the largest winder tread depth at the walkline shall not exceed the smallest winder tread by more than $^3/_8$ inch (9.5 mm). Consistently shaped winders at the walkline shall be allowed within the same flight of stairs as rectangular treads and do not have to be within $^3/_8$ inch (9.5 mm) of the rectangular tread depth.

R311.7.5.3 Nosings. The radius of curvature at the nosing shall be no greater than $^9/_{16}$ inch (14 mm). A nosing not less than $^3/_4$ inch (19 mm) but not more than $1^1/_4$ inches (32 mm) shall be provided on stairways with solid risers. The greatest nosing projection shall not exceed the smallest nosing projection by more than $^3/_8$

inch (9.5 mm) between two stories, including the nosing at the level of floors and landings. Beveling of nosings shall not exceed $^1/_2$ inch (12.7 mm).

Exception: A nosing is not required where the tread depth is a minimum of 11 inches (279 mm).

R311.7.5.4 Exterior wood/plastic composite stair treads. Wood/plastic composite stair treads shall comply with the provisions of Section R507.3.

R311.7.6 Landings for stairways. There shall be a floor or landing at the top and bottom of each stairway. The minimum width perpendicular to the direction of travel shall be no less than the width of the flight served. Landings of shapes other than square or rectangular shall be permitted provided the depth at the walk line and the total area is not less than that of a quarter circle with a radius equal to the required landing width. Where the stairway has a straight run, the minimum depth in the direction of travel shall be not less than 36 inches (914 mm).

Exception: A floor or landing is not required at the top of an interior flight of stairs, including stairs in an enclosed garage, provided a door does not swing over the stairs.

R311.7.7 Stairway walking surface. The walking surface of treads and landings of stairways shall be sloped no steeper than one unit vertical in 48 inches horizontal (2-percent slope).

R311.7.8 Handrails. Handrails shall be provided on at least one side of each continuous run of treads or flight with four or more risers.

R311.7.8.1 Height. Handrail height, measured vertically from the sloped plane adjoining the tread nosing, or finish surface of ramp slope, shall be not less than 34 inches (864 mm) and not more than 38 inches (965 mm).

Exceptions:

1. The use of a volute, turnout or starting easing shall be allowed over the lowest tread.
2. When handrail fittings or bendings are used to provide continuous transition between flights, transitions at winder treads, the transition from handrail to guardrail, or used at the start of a flight, the handrail height at the fittings or bendings shall be permitted to exceed the maximum height.

R311.7.8.2 Continuity. Handrails for stairways shall be continuous for the full length of the flight, from a point directly above the top riser of the flight to a point directly above the lowest riser of the flight. Handrail ends shall be returned or shall terminate in newel posts or safety terminals. Handrails adjacent to a wall shall have a space of not less than $1^1/_2$ inch (38 mm) between the wall and the handrails.

Exceptions:

1. Handrails shall be permitted to be interrupted by a newel post at the turn.
2. The use of a volute, turnout, starting easing or starting newel shall be allowed over the lowest tread.

R311.7.8.3 Grip-size. All required handrails shall be of one of the following types or provide equivalent graspability.

1. Type I. Handrails with a circular cross section shall have an outside diameter of at least $1^1/_4$ inches (32 mm) and not greater than 2 inches (51 mm). If the handrail is not circular, it shall have a perimeter dimension of at least 4 inches (102 mm) and not greater than $6^1/_4$ inches (160 mm) with a maximum cross section of dimension of $2^1/_4$ inches (57 mm). Edges shall have a minimum radius of 0.01 inch (0.25 mm).
2. Type II. Handrails with a perimeter greater than $6^1/_4$ inches (160 mm) shall have a graspable finger recess area on both sides of the profile. The finger recess shall begin within a distance of $^3/_4$ inch (19 mm) measured vertically from the tallest portion of the profile and achieve a depth of at least $^5/_{16}$ inch (8 mm) within $^7/_8$ inch (22 mm) below the widest portion of the profile. This required depth shall continue for at least $^3/_8$ inch (10 mm) to a level that is not less than $1^3/_4$ inches (45 mm) below the tallest portion of the profile. The minimum width of the handrail above the recess shall be $1^1/_4$ inches (32 mm) to a maximum of $2^3/_4$ inches (70 mm). Edges shall have a minimum radius of 0.01 inch (0.25 mm).

R311.7.8.4 Exterior wood/plastic composite handrails. Wood/plastic composite handrails shall comply with the provisions of Section R507.3.

R311.7.9 Illumination. All stairs shall be provided with illumination in accordance with Section R303.6.

R311.7.10 Special stairways. Spiral stairways and bulkhead enclosure stairways shall comply with all requirements of Section R311.7 except as specified below.

R311.7.10.1 Spiral stairways. Spiral stairways are permitted, provided the minimum clear width at and below the handrail shall be 26 inches (660 mm) with each tread having a $7^1/_2$-inch (190 mm) minimum tread depth at 12 inches (914 mm) from the narrower edge. All treads shall be identical, and the rise shall be no more than $9^1/_2$ inches (241 mm). A minimum headroom of 6 feet 6 inches (1982 mm) shall be provided.

R311.7.10.2 Bulkhead enclosure stairways. Stairways serving bulkhead enclosures, not part of the required building egress, providing access from the outside grade level to the basement shall be exempt from the requirements of Sections R311.3 and R311.7 where the maximum height from the basement finished floor level to grade adjacent to the stairway does not exceed 8 feet (2438 mm) and the grade level opening to the stairway is covered by a bulkhead enclosure with hinged doors or other approved means.

R311.8 Ramps.

R311.8.1 Maximum slope. Ramps shall have a maximum slope of 1 unit vertical in 12 units horizontal (8.3-percent slope).

Exception: Where it is technically infeasible to comply because of site constraints, ramps may have a maximum slope of one unit vertical in eight horizontal (12.5-percent slope).

R311.8.2 Landings required. A minimum 3-foot-by-3-foot (914 mm by 914 mm) landing shall be provided:

1. At the top and bottom of ramps.
2. Where doors open onto ramps.
3. Where ramps change direction.

R311.8.3 Handrails required. Handrails shall be provided on at least one side of all ramps exceeding a slope of one unit vertical in 12 units horizontal (8.33-percent slope).

R311.8.3.1 Height. Handrail height, measured above the finished surface of the ramp slope, shall be not less than 34 inches (864 mm) and not more than 38 inches (965 mm).

R311.8.3.2 Grip size. Handrails on ramps shall comply with Section R311.7.8.3.

R311.8.3.3 Continuity. Handrails where required on ramps shall be continuous for the full length of the ramp. Handrail ends shall be returned or shall terminate in newel posts or safety terminals. Handrails adjacent to a wall shall have a space of not less than $1^1/_2$ inches (38 mm) between the wall and the handrails.

SECTION R312
GUARDS AND WINDOW FALL PROTECTION

R312.1 Guards. Guards shall be provided in accordance with Sections R312.1.1 through R312.1.4.

R312.1.1 Where required. Guards shall be located along open-sided walking surfaces, including stairs, ramps and landings, that are located more than 30 inches (762 mm) measured vertically to the floor or grade below at any point within 36 inches (914 mm) horizontally to the edge of the open side. Insect screening shall not be considered as a guard.

R312.1.2 Height. Required guards at open-sided walking surfaces, including stairs, porches, balconies or landings, shall be not less than *42 inches (1067 mm)* high measured vertically above the adjacent walking surface, adjacent fixed seating or the line connecting the leading edges of the treads.

Exceptions:

1. Guards on the open sides of stairs shall have a height not less than 34 inches (864 mm) measured vertically from a line connecting the leading edges of the treads.
2. Where the top of the guard also serves as a handrail on the open sides of stairs, the top of the guard shall not be less than 34 inches (864 mm) and not more than 38 inches (965 mm) measured vertically from a line connecting the leading edges of the treads.

R312.1.3 Opening limitations. Required guards shall not have openings from the walking surface to the required guard height which allow passage of a sphere 4 inches (102 mm) in diameter.

Exceptions:

1. The triangular openings at the open side of stair, formed by the riser, tread and bottom rail of a guard, shall not allow passage of a sphere 6 inches (153 mm) in diameter.
2. Guards on the open side of stairs shall not have openings which allow passage of a sphere $4^3/_8$ inches (111 mm) in diameter.

R312.1.4 Exterior woodplastic composite guards. Woodplastic composite guards shall comply with the provisions of Section R317.4.

R312.2 Window fall protection. Window fall protection shall be provided in accordance with Sections R312.2.1 and R312.2.2. **

R312.2.1 Window sills. In dwelling units, where the opening of an operable window is located more than 72 inches (1829 mm) above the finished grade or surface below, the lowest part of the clear opening of the window shall be a minimum of 24 inches (610 mm) above the finished floor of the room in which the window is located. Operable sections of windows shall not permit openings that allow passage of a 4-inch-diameter (102 mm) sphere where such openings are located within 24 inches (610 mm) of the finished floor.

Exceptions:

1. Windows whose openings will not allow a 4-inch-diameter (102 mm) sphere to pass through the opening when the opening is in its largest opened position.
2. Openings that are provided with window fall prevention devices that comply with ASTM F 2090.
3. Windows that are provided with window opening control devices that comply with Section R312.2.2.

R312.2.2 Window opening control devices. Window opening control devices shall comply with ASTM F 2090. The window opening control device, after operation to release the control device allowing the window to fully

open, shall not reduce the minimum net clear opening area of the window unit to less than the area required by Section R310.1.1.

SECTION R313
AUTOMATIC FIRE SPRINKLER SYSTEMS

R313.1 Townhouse automatic fire sprinkler systems. An automatic residential fire sprinkler system shall be installed in townhouses.

Exception: An automatic residential fire sprinkler system shall not be required when additions or alterations are made to existing townhouses that do not have an automatic residential fire sprinkler system installed.

R313.1.1 Design and installation. Automatic residential fire sprinkler systems for townhouses shall be designed and installed in accordance with Section *R313 or NFPA 13D.*

R313.2 One- and two-family dwellings automatic fire systems. An automatic residential fire sprinkler system shall be installed in one- and two-family dwellings.

Exception: An automatic residential fire sprinkler system shall not be required for additions or alterations to existing buildings that are not already provided with an automatic residential sprinkler system.

R313.2.1 Design and installation. Automatic residential fire sprinkler systems shall be designed and installed in accordance with Section *R313* or NFPA 13D.

***R313.3* Dwelling unit fire sprinkler systems.**

***R313.3.1* General.** The design and installation of residential fire sprinkler systems shall be in accordance with NFPA 13D or Section *R313.3*, which shall be considered equivalent to NFPA 13D. Partial residential sprinkler systems shall be permitted to be installed only in buildings not required to be equipped with a residential sprinkler system. Section *R313.3* shall apply to stand-alone and multipurpose wet-pipe sprinkler systems that do not include the use of antifreeze. A multipurpose fire sprinkler system shall supply domestic water to both fire sprinklers and plumbing fixtures. A stand-alone sprinkler system shall be separate and independent from the water distribution system. A backflow flow preventer shall not be required to separate a stand-alone sprinkler system from the water distribution system.

***R313.3.1.1* Required sprinkler locations.** Sprinklers shall be installed to protect all areas of a dwelling unit.

Exceptions:

1. Attics, crawl spaces and normally unoccupied concealed spaces that do not contain fuel-fired appliances do not require sprinklers. In attics, crawl spaces and normally unoccupied concealed spaces that contain fuel-fired equipment, a sprinkler shall be installed above the equipment; however, sprinklers shall not be required in the remainder of the space.
2. Clothes closets, linen closets and pantries not exceeding 24 square feet (2.2 m^2) in area, with the smallest dimension not greater than 3 feet (915 mm) and having wall and ceiling surfaces of gypsum board.
3. Bathrooms not more than 55 square feet (5.1m^2) in area.
4. Detached garages; carports with no habitable space above; open attached porches; unheated entry areas, such as mud rooms, that are adjacent to an exterior door; and similar areas.

***R313.3.2* Sprinklers.** Sprinklers shall be new listed residential sprinklers and shall be installed in accordance with the sprinkler manufacturer's installation instructions.

***R313.3.2.1* Temperature rating and separation from heat sources.** Except as provided for in Section *R313.3.2.2*, sprinklers shall have a temperature rating of not less than 135°F (57°C) and not more than 170°F (77°C). Sprinklers shall be separated from heat sources as required by the sprinkler manufacturer's installation instructions.

***R313.3.2.2* Intermediate temperature sprinklers.** Sprinklers shall have an intermediate temperature rating not less than 175°F (79°C) and not more than 225°F (107°C) where installed in the following locations: 1. Directly under skylights, where the sprinkler is exposed to direct sunlight. 2. In attics. 3. In concealed spaces located directly beneath a roof. 4. Within the distance to a heat source as specified in Table *R313.3.2.2.*

***R313.3.2.3* Freezing areas.** Piping shall be protected from freezing as required by the California Plumbing Code. Where sprinklers are required in areas that are subject to freezing, dry-sidewall or dry-pendent sprinklers extending from a nonfreezing area into a freezing area shall be installed. *Where fire sprinkler piping cannot be adequately protected against freezing, the system shall be designed and installed in accordance with NFPA 13D.*

***R313.3.2.4* Sprinkler coverage.** Sprinkler coverage requirements and sprinkler obstruction requirements shall be in accordance with Sections *R313.3.2.4.1* and *R313.3.2.4.2.*

***R313.3.2.4.1* Coverage area limit.** The area of coverage of a single sprinkler shall not exceed 400 square feet (37 m^2) and shall be based on the sprinkler listing and the sprinkler manufacturer's installation instructions.

***R313.3.2.4.2* Obstructions to coverage.** Sprinkler discharge shall not be blocked by obstructions unless additional sprinklers are installed to protect the obstructed area. Additional sprinklers shall not be required where the sprinkler separation from obstructions complies with either the minimum distance indicated in Figure *R313.3.2.4.2* or the minimum distances specified in the sprinkler manufacturer's instructions where the manufacturer's instructions permit a lesser distance.

3756

R313.3.2.4.2.1 **Additional requirements for pendent sprinklers.** Pendent sprinklers within 3 feet (915 mm) of the center of a ceiling fan, surface- mounted ceiling luminaire or similar object shall be considered to be obstructed, and additional sprinklers shall be installed.

R313.3.2.4.2.2 **Additional requirements for sidewall sprinklers.** Sidewall sprinklers within 5 feet (1524 mm) of the center of a ceiling fan, surface- mounted ceiling luminaire or similar object shall be considered to be obstructed, and additional sprinklers shall be installed.

R313.3.2.5 **Sprinkler installation on systems assembled with solvent cement.** The solvent cementing of threaded adapter fittings shall be completed and threaded adapters for sprinklers shall be verified as being clear of excess cement prior to the installation of sprinklers on systems assembled with solvent cement.

R313.3.2.6 **Sprinkler modifications prohibited.** Painting, caulking or modifying of sprinklers shall be prohibited. Sprinklers that have been painted, caulked, modified or damaged shall be replaced with new sprinklers.

R313.3.3 **Sprinkler piping system.** Sprinkler piping shall be supported in accordance with the requirements for cold water distribution piping. Sprinkler piping shall comply with all requirements for cold water distribution piping. For multipurpose piping systems, the sprinkler piping shall connect to and be a part of the cold water distribution piping system.

R313.3.3.1 **Nonmetallic pipe and tubing.** Nonmetallic pipe and tubing, such as CPVC, PEX, and PE-RT shall be listed for use in residential fire sprinkler systems.

R313.3.3.1.1 **Nonmetallic pipe protection.** Nonmetallic pipe and tubing systems shall be protected from exposure to the living space by a layer of not less than $^3/_8$ inch (9.5 mm) thick gypsum wallboard, $^1/_2$ inch thick plywood (13 mm), or other material having a 15 minute fire rating.

Exceptions:

1. Pipe protection shall not be required in areas that do not require protection with sprinklers as specified in Section *R313.3.1.1.*
2. Pipe protection shall not be required where exposed piping is permitted by the pipe listing.

R313.3.3.2 **Shutoff valves prohibited.** With the exception of shutoff valves for the entire water distribution system, valves shall not be installed in any location where the valve would isolate piping serving one or more sprinklers.

R313.3.3.3 **Single dwelling limit.** Piping beyond the service valve located at the beginning of the water distribution system shall not serve more than one dwelling.

TABLE *R313.3.2.2*
LOCATIONS WHERE INTERMEDIATE TEMPERATURE SPRINKLERS ARE REQUIRED

HEAT SOURCE	*RANGE OF DISTANCE FROM HEAT SOURCE WITHIN WHICH INTERMEDIATE TEMPERATURE SPRINKLERS ARE REQUIRED[a,b] (inches)*
Fireplace, side of open or recessed fireplace	*12 to 36*
Fireplace, front of recessed fireplace	*36 to 60*
Coal and wood burning stove	*12 to 42*
Kitchen range top	*9 to 18*
Oven	*9 to 18*
Vent connector or chimney connector	*9 to 18*
Heating duct, not insulated	*9 to 18*
Hot water pipe, not insulated	*6 to 12*
Side of ceiling or wall warm air register	*12 to 24*
Front of wall mounted warm air register	*18 to 36*
Water heater, furnace or boiler	*3 to 6*
Luminaire up to 250 watts	*3 to 6*
Luminaire 250 watts up to 499 watts	*6 to 12*

a. Sprinklers shall not be located at distances less than the minimum table distance unless the sprinkler listing allows a lesser distance.

b. Distances shall be measured in a straight line from the nearest edge of the heat source to the nearest edge of the sprinkler.

R313.3.3.4 **Drain.** A means to drain the sprinkler system shall be provided on the system side of the water distribution shutoff valve.

R313.3.4 **Determining system design flow.** The flow for sizing the sprinkler piping system shall be based on the flow rating of each sprinkler in accordance with Section *R313.3.4.1* and the calculation in accordance with Section *R313.3.4.2.*

R313.3.4.1 **Determining required flow rate for each sprinkler.** The minimum required flow for each sprinkler shall be determined using the sprinkler manufacturer's published data for the specific sprinkler model based on all of the following:

1. The area of coverage.
2. The ceiling configuration.
3. The temperature rating.
4. Any additional conditions specified by the sprinkler manufacturer.

R313.3.4.2 **System design flow rate.** The design flow rate for the system shall be based on the following:

1. The design flow rate for a room having only one sprinkler shall be the flow rate required for that sprinkler, as determined by Section *R313.3.4.1.*
2. The design flow rate for a room having two or more sprinklers a shall be determined by identifying the sprinkler in that room with the highest required flow rate, based on Section *R313.3.4.1*, and multiplying that flow rate by 2.

PENDANT SPRINKLER TO SIDE OBSTRUCTION

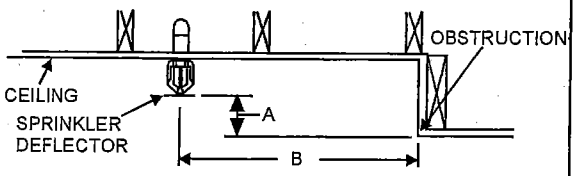

WHERE "A" IS LESS THAN OR EQUAL TO: (INCHES)	"B" MUST BE NOT LESS THAN: (FEET)
1	1½
3	3
5	4
7	4½
9	1½
11	6½
14	7

SIDEWALL SPRINKLER TO SIDE OBSTRUCTION

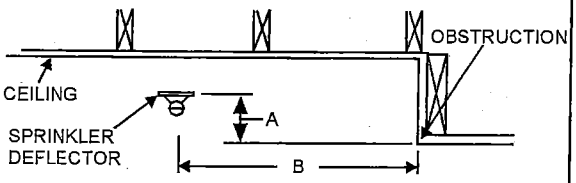

WHERE "A" IS LESS THAN OR EQUAL TO: (INCHES)	"B" MUST BE NOT LESS THAN: (FEET)
1	1½
3	3
5	4
7	4½
9	6
11	6½
14	7

SIDEWALL SPRINKLER TO FORWARD OBSTRUCTION

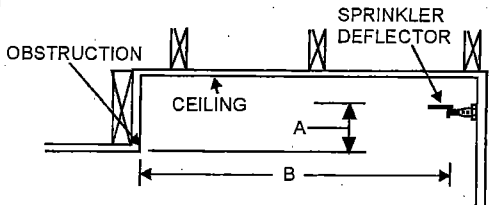

WHERE "A" IS LESS THAN OR EQUAL TO: (INCHES)	"B" MUST BE NOT LESS THAN: (FEET)
1	8
2	10
3	11
4	12
6	13
7	14
9	15
11	16
14	17

For SI: 1 inch = 25.4 mm, 1 foot = 304.8 mm.

FIGURE *R313.3.2.4.2*
MINIMUM ALLOWABLE DISTANCE BETWEEN SPRINKLER AND OBSTRUCTION

3. Where the sprinkler manufacturer specifies different criteria for ceiling configurations that are not smooth, flat and horizontal, the required flow rate for that room shall comply with the sprinkler manufacturer's instructions.

4. The design flow rate for the sprinkler system shall be the flow required by the room with the largest flow rate, based on Items 1, 2 and 3.

5. For the purpose of this section, it shall be permissible to reduce the design flow rate for a room by subdividing the space into two or more rooms, where each room is evaluated separately with respect to the required design flow rate. Each room shall be bounded by walls and a ceiling. Openings in walls shall have a lintel not less than 8 inches (203 mm) in depth and each lintel shall form a solid barrier between the ceiling and the top of the opening.

***R313.3.5* Water supply.** The water supply shall provide not less than the required design flow rate for sprinklers in accordance with Section *R313.3.4.2* at a pressure not less than that used to comply with Section *R313.3.6. Where a water supply serves both domestic and fire sprinkler systems, 5 gpm (19 L/min) shall be added to the sprinkler system demand at the point where the systems are connected, to determine the size of common piping and the size of the total water supply requirements where no provision is made to prevent flow into the domestic water system upon operation of a sprinkler.*

***R313.3.5.1* Water supply from individual sources.** Where a dwelling unit water supply is from a tank system, a private well system, a pump, or a combination of these, the available water supply shall be based on the minimum pressure control setting for the pump.

***R313.3.5.2* Required capacity.** The water supply shall have the capacity to provide the required design flow rate for sprinklers for a period of time as follows:

1. 7 minutes for dwelling units one story in height and less than 2,000 square feet (186 m^2) in area. *For the purpose of determining the area of the dwelling unit, the area of attached garages and attached open carports, porches, balconies and patios shall not be included.*

2. 10 minutes for dwelling units two or more stories in height or equal to or greater than 2,000 square feet (186 m^2) in area. *For the purpose of determining the area of the dwelling unit, the area of attached garages and attached open carports, porches, balconies, and patios shall not be included.*

Where a well system, a water supply tank system, a pump, or a combination thereof, is used, *the water supply shall serve both domestic and fire sprinkler systems.* Any combination of well capacity and tank storage shall be permitted to meet the capacity requirement.

R313.3.5.3 Connections to automatic fire sprinkler systems. *The potable water supply to automatic fire sprinkler shall be protected against backflow by a double check backflow prevention assembly, a double check fire protection backflow prevention assembly, a reduced pressure principle backflow prevention assembly or a reduced pressure principle fire protection backflow prevention assembly.*

Exception: *Where systems are installed as a portion of the water distribution system in accordance with the requirements of this code and are not provided with a fire department connection, backflow protection for the water supply system shall not be required.*

R313.3.5.3.1 Additives or nonpotable source. *Where systems contain chemical additives or antifreeze, or where systems are connected to a nonpotable secondary water supply, the potable water supply shall be protected against backflow by a reduced pressure principle backflow prevention assembly or a reduced pressure principle fire protection backflow prevention assembly. Where chemical additives or antifreeze is added to only a portion of an automatic fire sprinkler or standpipe system, the reduced pressure principle fire protection backflow preventer shall be permitted to be located so as to isolate that portion of the system.*

***R313.3.6* Pipe sizing.** The piping to sprinklers shall be sized for the flow required by Section *R313.3.4.2*. The flow required to supply the plumbing fixtures shall not be required to be added to the sprinkler design flow.

***R313.3.6.1* Method of sizing pipe.** Piping supplying sprinklers shall be sized using the prescriptive method in Section *R313.3.6.2* or by hydraulic calculation in accordance with NFPA 13D. The minimum pipe size from the water supply source to any sprinkler shall be $^3/_4$ inch (19 mm) nominal. Threaded adapter fittings at the point where sprinklers are attached to the piping shall be a minimum of $^1/_2$ inch (13 mm) nominal.

***R313.3.6.2* Prescriptive pipe sizing method.** Pipe shall be sized by determining the available pressure to offset friction loss in piping and identifying a piping material, diameter and length using the equation in Section *R313.3.6.2.1* and the procedure in Section *R313.3.6.2.2*.

***R313.3.6.2.1* Available pressure equation.** The pressure available to offset friction loss in the interior piping system (P_t) shall be determined in accordance with the Equation 29-1.

$$P_t = P_{sup} - PL_{svc} - PL_m - PL_d - PL_e - P_{sp} \quad \textit{(Equation 29-1)}$$

where:

P_t = Pressure used in applying Tables *R313.3.6.2(4)* through *R313.3.6.2(9)*.

P_{sup} = Pressure available from the water supply source.

PL_{svc} = Pressure loss in the water-service pipe.

PL_m = Pressure loss in the water meter.

PL_d = Pressure loss from devices other than the water meter.

PL_e = Pressure loss associated with changes in elevation.

P_{sp} = Maximum pressure required by a sprinkler.

R313.3.6.2.2 **Calculation procedure.** Determination of the required size for water distribution piping shall be in accordance with the following procedure:

Step 1 – Determine P_{sup}

Obtain the static supply pressure that will be available from the water main from the water purveyor, or for an individual source, the available supply pressure shall be in accordance with Section *R313.3.5.1.*

Step 2 – Determine PL_{svc}

Use Table *R313.3.6.2(1)* to determine the pressure loss in the water service pipe based on the selected size of the water service.

Step 3 – Determine PL_m

Use Table *R313.3.6.2(2)* to determine the pressure loss from the water meter, based on the selected water meter size.

Step 4 – Determine PL_d

Determine the pressure loss from devices other than the water meter installed in the piping system supplying sprinklers, such as pressure-reducing valves, backflow preventers, water softeners or water filters. Device pressure losses shall be based on the device manufacturer's specifications. The flow rate used to determine pressure loss shall be the rate from Section *R313.3.4.2*, except that 5 gpm (0.3 L/S) shall be added where the device is installed in a water-service pipe that supplies more than one dwelling. As alternative to deducting pressure loss for a device, an automatic bypass valve shall be installed to divert flow around the device when a sprinkler activates.

Step 5 – Determine PL_e

Use Table *R313.3.6.2(3)* to determine the pressure loss associated with changes in elevation. The elevation used in applying the table shall be the difference between the elevation where the water source pressure was measured and the elevation of the highest sprinkler.

Step 6 – Determine P_{sp}

Determine the maximum pressure required by any individual sprinkler based on the flow rate from Section *R313.3.4.1.* The required pressure is provided in the sprinkler manufacturer's published data for the specific sprinkler model based on the selected flow rate.

Step 7 – Calculate P_t

Using Equation 29-1, calculate the pressure available to offset friction loss in water-distribution piping between the service valve and the sprinklers.

Step 8 – Determine the maximum allowable pipe length

Use Tables *R313.3.6.2(4)* through *R313.3.6.2(9)* to select a material and size for water distribution piping. The piping material and size shall be acceptable if the developed length of pipe between the service valve and the most remote sprinkler does not exceed the maximum allowable length specified by the applicable table. Interpolation of Pt between the tabular values shall be permitted.

The maximum allowable length of piping in Tables *R313.3.6.2(4)* through *R313.3.6.2(9)* incorporates an adjustment for pipe fittings, and no additional consideration of friction losses associated with pipe fittings shall be required.

R313.3.7 **Instructions and signs.** An owner's manual for the fire sprinkler system shall be provided to the owner. A sign or valve tag shall be installed at the main shutoff valve to the water distribution system stating the following: "Warning, the water system for this home supplies fire sprinklers that require certain flows and pressures to fight a fire. Devices that restrict the flow or decrease the pressure or automatically shut off the water to the fire sprinkler system, such as water softeners, filtration systems and automatic shutoff valves, shall not be added to this system without a review of the fire sprinkler system by a fire protection specialist. Do not remove this sign."

R313.3.8 **Inspections.** The water distribution system shall be inspected in accordance with Sections *R313.3.8.1* and *R313.3.8.2.*

R313.3.8.1 **Preconcealment inspection.** The following items shall be verified prior to the concealment of any sprinkler system piping:

1. Sprinklers are installed in all areas as required by Section *R313.3.1.1.*
2. Where sprinkler water spray patterns are obstructed by construction features, luminaires or ceiling fans, additional sprinklers are installed as required by Section *R313.3.2.4.2.*
3. Sprinklers are the correct temperature rating and are installed at or beyond the required separation distances from heat sources as required by Sections *R313.3.2.1* and *R313.3.2.2.*
4. The pipe size equals or exceeds the size used in applying Tables *R313.3.6.2(4)* through *R313.3.6.2(9)* or, if the piping system was hydraulically calculated in accordance with Section *R313.3.6.1*, the size used in the hydraulic calculation.

TABLE *R313.3.6.2(1)*
WATER SERVICE PRESSURE LOSS (PL_{svc})[a, b]

FLOW RATE[c] (gpm)	3/4-INCH WATER SERVICE PRESSURE LOSS (psi)				1-INCH WATER SERVICE PRESSURE LOSS (psi)				1 1/4-INCH WATER SERVICE PRESSURE LOSS (psi)			
	Length of water service pipe (feet)				Length of water service pipe (feet)				Length of water service pipe (feet)			
	40 or less	41 to 75	76 to 100	101 to 150	40 or less	41 to 75	76 to 100	101 to 150	40 or less	41 to 75	76 to 100	101 to 150
8	5.1	8.7	11.8	17.4	1.5	2.5	3.4	5.1	0.6	1.0	1.3	1.9
10	7.7	13.1	17.8	26.3	2.3	3.8	5.2	7.7	0.8	1.4	2.0	2.9
12	10.8	18.4	24.9	NP	3.2	5.4	7.3	10.7	1.2	2.0	2.7	4.0
14	14.4	24.5	NP	NP	4.2	7.1	9.6	14.3	1.6	2.7	3.6	5.4
16	18.4	NP	NP	NP	5.4	9.1	12.4	18.3	2.0	3.4	4.7	6.9
18	22.9	NP	NP	NP	6.7	11.4	15.4	22.7	2.5	4.3	5.8	8.6
20	27.8	NP	NP	NP	8.1	13.8	18.7	27.6	3.1	5.2	7.0	10.4
22	NP	NP	NP	NP	9.7	16.5	22.3	NP	3.7	6.2	8.4	12.4
24	NP	NP	NP	NP	11.4	19.3	26.2	NP	4.3	7.3	9.9	14.6
26	NP	NP	NP	NP	13.2	22.4	NP	NP	5.0	8.5	11.4	16.9
28	NP	NP	NP	NP	15.1	25.7	NP	NP	5.7	9.7	13.1	19.4
30	NP	NP	NP	NP	17.2	NP	NP	NP	6.5	11.0	14.9	22.0
32	NP	NP	NP	NP	19.4	NP	NP	NP	7.3	12.4	16.8	24.8
34	NP	NP	NP	NP	21.7	NP	NP	NP	8.2	13.9	18.8	NP
36	NP	NP	NP	NP	24.1	NP	NP	NP	9.1	15.4	20.9	NP

For SI: 1 inch = 25.4 mm, 1 foot = 304.8 mm, 1 gallon per minute = 0.063 L/s, 1 pound per square inch = 6.895 kPa.

NP = Not permitted. Pressure loss exceeds reasonable limits.

a. Values are applicable for underground piping materials listed in the *California Plumbing Code* and are based on an SDR of 11 and a Hazen Williams C Factor of 150.

b. Values include the following length allowances for fittings: 25% length increase for actual lengths up to 100 feet and 15% length increase for actual lengths over 100 feet.

c. Flow rate from Section *R313.3.4.2*. Add 5 gpm to the flow rate required by Section *R313.3.4.2.4.2* where the water-service pipe supplies more than one dwelling.

TABLE *R313.3.6.2(2)*
MINIMUM WATER METER PRESSURE LOSS (PL_m)[a]

FLOW RATE (gallons per minute, gpm)[b]	5/8-INCH METER PRESSURE LOSS (pounds per square inch, psi)	3/4-INCH METER PRESSURE LESS (pounds per square inch, psi)	1-INCH METER PRESSURE LOSS (pounds per square inch, psi)
8	2	1	1
10	3	1	1
12	4	1	1
14	5	2	1
16	7	3	1
18	9	4	1
20	11	4	2
22	NP	5	2
24	NP	5	2
26	NP	6	2
28	NP	6	2
30	NP	7	2
32	NP	7	3
34	NP	8	3
36	NP	8	3

For SI: 1 inch = 25.4 mm, 1 pound per square inch = 6.895 kPa, 1 gallon per minute = 0.063 L/s.

NP—Not permitted unless the actual water meter pressure loss is known.

a. Table *R313.3.6.2(2)* establishes conservative values for water meter pressure loss or installations where the water meter loss is unknown. Where the actual water meter pressure loss is known, P_m shall be the actual loss.

b. Flow rate from Section *R313.3.4.2*. Add 5 gpm to the flow rate required by Section *R313.3.4.2* where the water-service pipe supplies more than one dwelling.

TABLE *R313.3.6.2(3)*
ELEVATION LOSS (PL_e)

ELEVATION (feet)	PRESSURE LOSS (psi)
5	2.2
10	4.4
15	6.5
20	8.7
25	10.9
30	13
35	15.2
40	17.4

For SI: 1 foot = 304.8 mm, 1 pound per square inch = 6.895 kPa.

TABLE *R313.3.6.2(4)*
ALLOWABLE PIPE LENGTH FOR $^3/_4$-INCH TYPE M COPPER WATER TUBING

SPRINKLER FLOW RATE[a] (gpm)	WATER DISTRIBUTION SIZE (inch)	AVAILABLE PRESSURE—P_f (psi)									
		15	20	25	30	35	40	45	50	55	60
		Allowable length of pipe from service valve to farthest sprinkler (feet)									
8	$^3/_4$	217	289	361	434	506	578	650	723	795	867
9	$^3/_4$	174	232	291	349	407	465	523	581	639	697
10	$^3/_4$	143	191	239	287	335	383	430	478	526	574
11	$^3/_4$	120	160	200	241	281	321	361	401	441	481
12	$^3/_4$	102	137	171	205	239	273	307	341	375	410
13	$^3/_4$	88	118	147	177	206	235	265	294	324	353
14	$^3/_4$	77	103	128	154	180	205	231	257	282	308
15	$^3/_4$	68	90	113	136	158	181	203	226	248	271
16	$^3/_4$	60	80	100	120	140	160	180	200	220	241
17	$^3/_4$	54	72	90	108	125	143	161	179	197	215
18	$^3/_4$	48	64	81	97	113	129	145	161	177	193
19	$^3/_4$	44	58	73	88	102	117	131	146	160	175
20	$^3/_4$	40	53	66	80	93	106	119	133	146	159
21	$^3/_4$	36	48	61	73	85	97	109	121	133	145
22	$^3/_4$	33	44	56	67	78	89	100	111	122	133
23	$^3/_4$	31	41	51	61	72	82	92	102	113	123
24	$^3/_4$	28	38	47	57	66	76	85	95	104	114
25	$^3/_4$	26	35	44	53	61	70	79	88	97	105
26	$^3/_4$	24	33	41	49	57	65	73	82	90	98
27	$^3/_4$	23	30	38	46	53	61	69	76	84	91
28	$^3/_4$	21	28	36	43	50	57	64	71	78	85
29	$^3/_4$	20	27	33	40	47	53	60	67	73	80
30	$^3/_4$	19	25	31	38	44	50	56	63	69	75
31	$^3/_4$	18	24	29	35	41	47	53	59	65	71
32	$^3/_4$	17	22	28	33	39	44	50	56	61	67
33	$^3/_4$	16	21	26	32	37	42	47	53	58	63
34	$^3/_4$	NP	20	25	30	35	40	45	50	55	60
35	$^3/_4$	NP	19	24	28	33	38	42	47	52	57
36	$^3/_4$	NP	18	22	27	31	36	40	45	49	54
37	$^3/_4$	NP	17	21	26	30	34	38	43	47	51
38	$^3/_4$	NP	16	20	24	28	32	36	40	45	49
39	$^3/_4$	NP	15	19	23	27	31	35	39	42	46
40	$^3/_4$	NP	NP	18	22	26	29	33	37	40	44

For SI: 1 inch = 25.4 mm, 1 foot = 304.8 mm, 1 pound per square inch = 6.895 kPa, 1 gallon per minute = 0.963 L/s.
NP—Not permitted
a. Flow rate from Section *R313.3.4.2.*

3762

TABLE *R313.3.6.2(5)*
ALLOWABLE PIPE LENGTH FOR 1-INCH TYPE M COPPER WATER TUBING

SPRINKLER FLOW RATE[a] (gpm)	WATER DISTRIBUTION SIZE (inch)	AVAILABLE PRESSURE—P_t (psi)									
		15	20	25	30	35	40	45	50	55	60
		Allowable length of pipe from service valve to farthest sprinkler (feet)									
8	1	806	1075	1343	1612	1881	2149	2418	2687	2955	3224
9	1	648	864	1080	1296	1512	1728	1945	2161	2377	2593
10	1	533	711	889	1067	1245	1422	1600	1778	1956	2134
11	1	447	586	745	894	1043	1192	1341	1491	1640	1789
12	1	381	508	634	761	888	1015	1142	1269	1396	1523
13	1	328	438	547	657	766	875	985	1094	1204	1313
14	1	286	382	477	572	668	763	859	954	1049	1145
15	1	252	336	420	504	588	672	756	840	924	1008
16	1	224	298	373	447	522	596	671	745	820	894
17	1	200	266	333	400	466	533	600	666	733	799
18	1	180	240	300	360	420	479	539	599	659	719
19	1	163	217	271	325	380	434	488	542	597	651
20	1	148	197	247	296	345	395	444	493	543	592
21	1	135	180	225	270	315	360	406	451	496	541
22	1	124	165	207	248	289	331	372	413	455	496
23	1	114	152	190	228	267	305	343	381	419	457
24	1	106	141	176	211	246	282	317	352	387	422
25	1	98	131	163	196	228	261	294	326	359	392
26	1	91	121	152	182	212	243	273	304	334	364
27	1	85	113	142	170	198	226	255	283	311	340
28	1	79	106	132	159	185	212	238	265	291	318
29	1	74	99	124	149	174	198	223	248	273	298
30	1	70	93	116	140	163	186	210	233	256	280
31	1	66	88	110	132	153	175	197	219	241	263
32	1	62	83	103	124	145	165	186	207	227	248
33	1	59	78	98	117	137	156	176	195	215	234
34	1	55	74	92	111	129	148	166	185	203	222
35	1	53	70	88	105	123	140	158	175	193	210
36	1	50	66	83	100	116	133	150	166	183	199
37	1	47	63	79	95	111	126	142	158	174	190
38	1	45	60	75	90	105	120	135	150	165	181
39	1	43	57	72	86	100	115	129	143	158	172
40	1	41	55	68	82	96	109	123	137	150	164

For SI: 1 inch = 25.4 mm, 1 foot = 304.8 mm, 1 pound per square inch = 6.895 kPa, 1 gallon per minute = 0.963 L/s.

a. Flow rate from Section *R313.3.4.2.*

TABLE *R313.3.6.2(6)*
ALLOWABLE PIPE LENGTH FOR $^3/_4$-INCH CPVC PIPE

SPRINKLER FLOW RATE[a] (gpm)	WATER DISTRIBUTION SIZE (inch)	AVAILABLE PRESSURE—P_t (psi)									
		15	20	25	30	35	40	45	50	55	60
		Allowable length of pipe from service valve to farthest sprinkler (feet)									
8	$^3/_4$	348	465	581	697	813	929	1045	1161	1278	1394
9	$^3/_4$	280	374	467	560	654	747	841	934	1027	1121
10	$^3/_4$	231	307	384	461	538	615	692	769	845	922
11	$^3/_4$	193	258	322	387	451	515	580	644	709	773
12	$^3/_4$	165	219	274	329	384	439	494	549	603	658
13	$^3/_4$	142	189	237	284	331	378	426	473	520	568
14	$^3/_4$	124	165	206	247	289	330	371	412	454	495
15	$^3/_4$	109	145	182	218	254	290	327	363	399	436
16	$^3/_4$	97	129	161	193	226	258	290	322	354	387
17	$^3/_4$	86	115	144	173	202	230	259	288	317	346
18	$^3/_4$	78	104	130	155	181	207	233	259	285	311
19	$^3/_4$	70	94	117	141	164	188	211	234	258	281
20	$^3/_4$	64	85	107	128	149	171	192	213	235	256
21	$^3/_4$	58	78	97	117	136	156	175	195	214	234
22	$^3/_4$	54	71	89	107	125	143	161	179	197	214
23	$^3/_4$	49	66	82	99	115	132	148	165	181	198
24	$^3/_4$	46	61	76	91	107	122	137	152	167	183
25	$^3/_4$	42	56	71	85	99	113	127	141	155	169
26	$^3/_4$	39	52	66	79	92	105	118	131	144	157
27	$^3/_4$	37	49	61	73	86	98	110	122	135	147
28	$^3/_4$	34	46	57	69	80	92	103	114	126	137
29	$^3/_4$	32	43	54	64	75	86	96	107	118	129
30	$^3/_4$	30	40	50	60	70	81	91	101	111	121
31	$^3/_4$	28	38	47	57	66	76	85	95	104	114
32	$^3/_4$	27	36	45	54	63	71	80	89	98	107
33	$^3/_4$	25	34	42	51	59	68	76	84	93	101
34	$^3/_4$	24	32	40	48	56	64	72	80	88	96
35	$^3/_4$	23	30	38	45	53	61	68	76	83	91
36	$^3/_4$	22	29	36	43	50	57	65	72	79	86
37	$^3/_4$	20	27	34	41	48	55	61	68	75	82
38	$^3/_4$	20	26	33	39	46	52	59	65	72	78
39	$^3/_4$	19	25	31	37	43	50	56	62	68	74
40	$^3/_4$	18	24	30	35	41	47	53	59	65	71

For SI: 1 inch = 25.4 mm, 1 foot = 304.8 mm, 1 pound per square inch = 6.895 kPa, 1 gallon per minute = 0.963 L/s.
a. Flow rate from Section *R313.3.4.2*.

TABLE *R313.3.6.2(7)*
ALLOWABLE PIPE LENGTH FOR 1-INCH CPVC PIPE

SPRINKLER FLOW RATE[a] (gpm)	WATER DISTRIBUTION SIZE (inch)	AVAILABLE PRESSURE—P_t (psi)									
		15	20	25	30	35	40	45	50	55	60
		Allowable length of pipe from service valve to farthest sprinkler (feet)									
8	1	1049	1398	1748	2098	2447	2797	3146	3496	3845	4195
9	1	843	1125	1406	1687	1968	2249	2530	2811	3093	3374
10	1	694	925	1157	1388	1619	1851	2082	2314	2545	2776
11	1	582	776	970	1164	1358	1552	1746	1940	2133	2327
12	1	495	660	826	991	1156	1321	1486	1651	1816	1981
13	1	427	570	712	854	997	1139	1281	1424	1566	1709
14	1	372	497	621	745	869	993	1117	1241	1366	1490
15	1	328	437	546	656	765	874	983	1093	1202	1311
16	1	291	388	485	582	679	776	873	970	1067	1164
17	1	260	347	433	520	607	693	780	867	954	1040
18	1	234	312	390	468	546	624	702	780	858	936
19	1	212	282	353	423	494	565	635	706	776	847
20	1	193	257	321	385	449	513	578	642	706	770
21	1	176	235	293	352	410	469	528	586	645	704
22	1	161	215	269	323	377	430	484	538	592	646
23	1	149	198	248	297	347	396	446	496	545	595
24	1	137	183	229	275	321	366	412	458	504	550
25	1	127	170	212	255	297	340	382	425	467	510
26	1	118	158	197	237	276	316	355	395	434	474
27	1	111	147	184	221	258	295	332	368	405	442
28	1	103	138	172	207	241	275	310	344	379	413
29	1	97	129	161	194	226	258	290	323	355	387
30	1	91	121	152	182	212	242	273	303	333	364
31	1	86	114	143	171	200	228	257	285	314	342
32	1	81	108	134	161	188	215	242	269	296	323
33	1	76	102	127	152	178	203	229	254	280	305
34	1	72	96	120	144	168	192	216	240	265	289
35	1	68	91	114	137	160	182	205	228	251	273
36	1	65	87	108	130	151	173	195	216	238	260
37	1	62	82	103	123	144	165	185	206	226	247
38	1	59	78	98	117	137	157	176	196	215	235
39	1	56	75	93	112	131	149	168	187	205	224
40	1	53	71	89	107	125	142	160	178	196	214

For SI: 1 inch = 25.4 mm, 1 foot = 304.8 mm, 1 pound per square inch = 6.895 kPa, 1 gallon per minute = 0.963 L/s.

a. Flow rate from Section *R313.3.4.2*.

TABLE *R313.3.6.2(8)*
ALLOWABLE PIPE LENGTH FOR $^3/_4$-INCH PEX AND PE-RT TUBING

SPRINKLER FLOW RATE[a] (gpm)	WATER DISTRIBUTION SIZE (inch)	AVAILABLE PRESSURE—P_t (psi)									
		15	20	25	30	35	40	45	50	55	60
		Allowable length of pipe from service valve to farthest sprinkler (feet)									
8	$^3/_4$	93	123	154	185	216	247	278	309	339	370
9	$^3/_4$	74	99	124	149	174	199	223	248	273	298
10	$^3/_4$	61	82	102	123	143	163	184	204	225	245
11	$^3/_4$	51	68	86	103	120	137	154	171	188	205
12	$^3/_4$	44	58	73	87	102	117	131	146	160	175
13	$^3/_4$	38	50	63	75	88	101	113	126	138	151
14	$^3/_4$	33	44	55	66	77	88	99	110	121	132
15	$^3/_4$	29	39	48	58	68	77	87	96	106	116
16	$^3/_4$	26	34	43	51	60	68	77	86	94	103
17	$^3/_4$	23	31	38	46	54	61	69	77	84	92
18	$^3/_4$	21	28	34	41	48	55	62	69	76	83
19	$^3/_4$	19	25	31	37	44	50	56	62	69	75
20	$^3/_4$	17	23	28	34	40	45	51	57	62	68
21	$^3/_4$	16	21	26	31	36	41	47	52	57	62
22	$^3/_4$	NP	19	24	28	33	38	43	47	52	57
23	$^3/_4$	NP	17	22	26	31	35	39	44	48	52
24	$^3/_4$	NP	16	20	24	28	32	36	40	44	49
25	$^3/_4$	NP	NP	19	22	26	30	34	37	41	45
26	$^3/_4$	NP	NP	17	21	24	28	31	35	38	42
27	$^3/_4$	NP	NP	16	20	23	26	29	33	36	39
28	$^3/_4$	NP	NP	15	18	21	24	27	30	33	36
29	$^3/_4$	NP	NP	NP	17	20	23	26	28	31	34
30	$^3/_4$	NP	NP	NP	16	19	21	24	27	29	32
31	$^3/_4$	NP	NP	NP	15	18	20	23	25	28	30
32	$^3/_4$	NP	NP	NP	NP	17	19	21	24	26	28
33	$^3/_4$	NP	NP	NP	NP	16	18	20	22	25	27
34	$^3/_4$	NP	NP	NP	NP	NP	17	19	21	23	25
35	$^3/_4$	NP	NP	NP	NP	NP	16	18	20	22	24
36	$^3/_4$	NP	NP	NP	NP	NP	15	17	19	21	23
37	$^3/_4$	NP	NP	NP	NP	NP	NP	16	18	20	22
38	$^3/_4$	NP	NP	NP	NP	NP	NP	16	17	19	21
39	$^3/_4$	NP	NP	NP	NP	NP	NP	NP	16	18	20
40	$^3/_4$	NP	NP	NP	NP	NP	NP	NP	16	17	19

For SI: 1 inch = 25.4 mm, 1 foot = 304.8 mm, 1 pound per square inch = 6.895 kPa, 1 gallon per minute = 0.963 L/s.
NP— Not permitted.
a. Flow rate from Section *R313.3.4.2*.

TABLE *R313.3.6.2(9)*
ALLOWABLE PIPE LENGTH FOR 1-INCH PEX AND PE-RT TUBING

SPRINKLER FLOW RATE[a] (gpm)	WATER DISTRIBUTION SIZE (inch)	AVAILABLE PRESSURE—P_t(psi)									
		15	20	25	30	35	40	45	50	55	60
		Allowable length of pipe from service valve to farthest sprinkler (feet)									
8	1	314	418	523	628	732	837	941	1046	1151	1255
9	1	252	336	421	505	589	673	757	841	925	1009
10	1	208	277	346	415	485	554	623	692	761	831
11	1	174	232	290	348	406	464	522	580	638	696
12	1	148	198	247	296	346	395	445	494	543	593
13	1	128	170	213	256	298	341	383	426	469	511
14	1	111	149	186	223	260	297	334	371	409	446
15	1	98	131	163	196	229	262	294	327	360	392
16	1	87	116	145	174	203	232	261	290	319	348
17	1	78	104	130	156	182	208	233	259	285	311
18	1	70	93	117	140	163	187	210	233	257	280
19	1	63	84	106	127	148	169	190	211	232	253
20	1	58	77	96	115	134	154	173	192	211	230
21	1	53	70	88	105	123	140	158	175	193	211
22	1	48	64	80	97	113	129	145	161	177	193
23	1	44	59	74	89	104	119	133	148	163	178
24	1	41	55	69	82	96	110	123	137	151	164
25	1	38	51	64	76	89	102	114	127	140	152
26	1	35	47	59	71	83	95	106	118	130	142
27	1	33	44	55	66	77	88	99	110	121	132
28	1	31	41	52	62	72	82	93	103	113	124
29	1	29	39	48	58	68	77	87	97	106	116
30	1	27	36	45	54	63	73	82	91	100	109
31	1	26	34	43	51	60	68	77	85	94	102
32	1	24	32	40	48	56	64	72	80	89	97
33	1	23	30	38	46	53	61	68	76	84	91
34	1	22	29	36	43	50	58	65	72	79	86
35	1	20	27	34	41	48	55	61	68	75	82
36	1	19	26	32	39	45	52	58	65	71	78
37	1	18	25	31	37	43	49	55	62	68	74
38	1	18	23	29	35	41	47	53	59	64	70
39	1	17	22	28	33	39	45	50	56	61	67
40	1	16	21	27	32	37	43	48	53	59	64

For SI: 1 inch = 25.4 mm, 1 foot = 304.8 mm, 1 pound per square inch = 6.895 kPa, 1 gallon per minute = 0.963 L/s.
a. Flow rate from Section *R313.3.4.2*

5. The pipe length does not exceed the length permitted by Tables *R313.3.6.2(4)* through *R313.3.6.2(9)* or, if the piping system was hydraulically calculated in accordance with Section *R313.3.6.1*, pipe lengths and fittings do not exceed those used in the hydraulic calculation.
6. Nonmetallic piping that conveys water to sprinklers is listed for use with fire sprinklers.
7. Piping is supported in accordance with the pipe manufacturer's and sprinkler manufacturer's installation instructions.
8. The piping system is tested in accordance with the *California Plumbing Code.*

***R313.3.8.2* Final inspection.** The following items shall be verified upon completion of the system:

1. Sprinkler are not painted, damaged or otherwise hindered from operation.
2. Where a pump is required to provide water to the system, the pump starts automatically upon system water demand.
3. Pressure-reducing valves, water softeners, water filters or other impairments to water flow that

were not part of the original design have not been installed.

4. The sign or valve tag required by Section *R313.3.7* is installed and the owner's manual for the system is present.

SECTION R314
SMOKE ALARMS

R314.1 Smoke detection and notification. All smoke alarms shall be listed and labeled in accordance with UL 217 and installed in accordance with the provisions of this code and the household fire warning equipment provisions of NFPA 72. *Systems and components shall be California State Fire Marshal listed and approved in accordance with California Code of Regulations, Title 19, Division 1 for the purpose for which they are installed.*

R314.2 Smoke detection systems. Household fire alarm systems installed in accordance with NFPA 72 that include smoke alarms, or a combination of smoke detector and audible notification device installed as required by this section for smoke alarms, shall be permitted. The household fire alarm system shall provide the same level of smoke detection and alarm as required by this section for smoke alarms. Where a household fire warning system is installed using a combination of smoke detector and audible notification device(s), it shall become a permanent fixture of the occupancy and owned by the homeowner. The system shall be monitored by an approved supervising station and be maintained in accordance with NFPA 72.

Exception: Where smoke alarms are provided meeting the requirements of Section R314.4.

R314.3 Location. Smoke alarms shall be installed in the following locations:

1. In each sleeping room.
2. Outside each separate sleeping area in the immediate vicinity of the bedrooms.
3. On each additional story of the dwelling, including basements and habitable attics but not including crawl spaces and uninhabitable attics. In dwellings or dwelling units with split levels and without an intervening door between the adjacent levels, a smoke alarm installed on the upper level shall suffice for the adjacent lower level provided that the lower level is less than one full story below the upper level.

See Section 907.2.11.5 for specific location requirements.

R314.3.1 Alterations, repairs and additions. When alterations, repairs or additions requiring a permit occur, or when one or more sleeping rooms are added or created in existing dwellings, the individual dwelling unit shall be equipped with smoke alarms located as required for new dwellings.

Exceptions: *See Section R314.6.*

R314.3.2 Smoke alarms. *Smoke alarms shall be tested and maintained in accordance with the manufacturer's instructions. Smoke alarms that no longer function shall be replaced. Smoke alarms installed in one- and two-family dwellings shall be replaced after 10 years from the date of manufacture marked on the unit, or if the date of manufacture cannot be determined.*

R314.3.3 Conventional ionization smoke alarms. *Conventional ionization smoke alarms that are solely battery powered shall be equipped with a ten-year battery and have a silence feature.*

Conventional ionization smoke alarm for the purposes of this section is a smoke alarm, listed as complying with ANSI/UL 217, in which the only sensing element is an ionization sensor. The output signal from the ionization sensor must exceed a factory set alarm threshold, without the use discriminating algorithms, to determine when an alarm signal is warranted.

R314.3.4 Specific location requirements.
*Extract from NFPA 72 Section 29.8.3.4 Specific Location Requirements.**

This extract has been provided by NFPA as amended by the Office of the State Fire Marshal and adopted by reference as follows:

29.8.3.4 Specific location requirements. *The installation of smoke alarms and smoke detectors shall comply with the following requirements:*

(1) Smoke alarms and smoke detectors shall not be located where ambient conditions, including humidity and temperature, are outside the limits specified by the manufacturer's published instructions.

(2) Smoke alarms and smoke detectors shall not be located within unfinished attics or garages or in other spaces where temperatures can fall below 40°F (4°C) or exceed 100°F (38°C).

(3) Where the mounting surface could become considerably warmer or cooler than the room, such as a poorly insulated ceiling below an unfinished attic or an exterior wall, smoke alarms and smoke detectors shall be mounted on an inside wall.

(4) Smoke alarms or smoke detectors shall be installed a minimum of 20 feet horizontal distance from a permanently installed cooking appliance.

Exception: *Ionization smoke alarms with an alarm-silencing switch or Photoelectric smoke alarms shall be permitted to be installed 10 feet (3 m) or greater from a permanently installed cooking appliance.*

Photoelectric smoke alarms shall be permitted to be installed greater than 6 feet (1.8 m) from a permanently installed cooking appliance where the kitchen or cooking area and adjacent spaces have no clear interior partitions and the 10 ft distances would prohibit the placement of a smoke alarm or smoke detector required by other sections of the

code. Smoke alarms listed for use in close proximity to a permanently installed cooking appliance.

(5) Installation near bathrooms. Smoke alarms shall be installed not less than a 3 foot (0.91 m) horizontal distance from the door or opening of a bathroom that contains a bathtub or shower unless this would prevent placement of a smoke alarm required by other sections of the code.

(6) Smoke alarms and smoke detectors shall not be installed within a 36 in. (910 mm) horizontal path from the supply registers of a forced air heating or cooling system and shall be installed outside of the direct airflow from those registers.

(7) Smoke alarms and smoke detectors shall not be installed within a 36 in. (910 mm) horizontal path from the tip of the blade of a ceiling-suspended (paddle) fan.

(8) Where stairs lead to other occupied levels, a smoke alarm or smoke detector shall be located so that smoke rising in the stairway cannot be prevented from reaching the smoke alarm or smoke detector by an intervening door or obstruction.

(9) For stairways leading up from a basement, smoke alarms or smoke detectors shall be located on the basement ceiling near the entry to the stairs.

(10) For tray-shaped ceilings (coffered ceilings), smoke alarms and smoke detectors shall be installed on the highest portion of the ceiling or on the sloped portion of the ceiling within 12 in. (300 mm) vertically down from the highest point.

(11) Smoke alarms and detectors installed in rooms with joists or beams shall comply with the requirements of 17.7.3.2.4.

(12) Heat alarms and detectors installed in rooms with joists or beams shall comply with the requirements of 17.6.3.

****For additional requirements or clarification see NFPA 72.***

R314.4 Power source. *Smoke alarms shall receive their primary power from the building wiring provided that such wiring is served from a commercial source and shall be equipped with a battery backup. Smoke alarms with integral strobes that are not equipped with battery backup shall be connected to an emergency electrical system. Smoke alarms shall emit a signal when the batteries are low. Wiring shall be permanent and without a disconnecting switch other than as required for overcurrent protection.*

Exceptions:

1. *Smoke alarms are permitted to be solely battery operated in existing buildings where no construction is taking place.*
2. *Smoke alarms are permitted to be solely battery operated in buildings that are not served from a commercial power source.*
3. *Smoke alarms are permitted to be solely battery operated in existing areas of buildings undergoing alterations or repairs that do not result in the removal of interior walls or ceiling finishes exposing the structure, unless there is an attic, crawl space or basement available which could provide access for building wiring without the removal of interior finishes.*
4. *Smoke alarms are permitted to be solely battery operated where repairs or alterations are limited to the exterior surfaces of dwellings, such as the replacement of roofing or siding, or the addition or replacement of windows or doors, or the addition of a porch or deck.*
5. *Smoke alarms are permitted to be solely battery operated when work is limited to the installation, alteration or repairs of plumbing or mechanical systems or the installation, alteration or repair of electrical systems which do not result in the removal of interior wall or ceiling finishes exposing the structure.*

R314.5 Interconnection. *Where more than one smoke alarm is required to be installed within an individual dwelling or sleeping unit, the smoke alarms shall be interconnected in such a manner that the activation of one alarm will activate all of the alarms in the individual unit. The alarm shall be clearly audible in all bedrooms over background noise levels with all intervening doors closed.*

Exceptions:

1. *Interconnection is not required in buildings that are not undergoing alterations, repairs or construction of any kind.*
2. *Smoke alarms in existing areas are not required to be interconnected where alterations or repairs do not result in the removal of interior wall or ceiling finishes exposing the structure, unless there is an attic, crawl space or basement available which could provide access for interconnection without the removal of interior finishes.*
3. *Smoke alarms are not required to be interconnected where repairs or alterations are limited to the exterior surfaces of dwellings, such as the replacement of roofing or siding, or the addition or replacement of windows or doors, or the addition of a porch or deck.*
4. *Smoke alarms are not required to be interconnected when work is limited to the installation, alteration or repairs of plumbing or mechanical systems or the installation, alteration or repair of electrical systems which do not result in the removal of interior wall or ceiling finishes exposing the structure.*

R314.6 Existing Group R-3 occupancies.

R314.6.1 *Existing buildings housing Group R-3 occupancies established prior to the effective date of these regulations may have their use continued if they conform or are made to conform to provisions of these regulations to the extent that reasonable and adequate life safety against the hazards of fire, panic and explosion is substantially provided. Additional means of egress, the installation of automatic sprinkler systems, automatic fire alarm system or*

other life safety measures, may be required to provide reasonable and adequate safety.

***Note:** It is the intent of this section that every existing occupancy need not mandatorily conform with the requirements for new construction. Reasonable judgment in the application of requirements must be exercised by the enforcing agency.*

***R314.6.2** For purposes of clarification, Health and Safety Code Section 13113.7 is repeated.*

a. Except as otherwise provided in this section, a smoke detector, approved and listed by the State Fire Marshal pursuant to Section 13114, shall be installed, in accordance with the manufacturer's instructions in each dwelling intended for human occupancy within the earliest applicable time period as follows:

1. For all dwelling units intended for human occupancy, upon the owner's application on or after January 1, 1985, for a permit for alterations, repairs, or additions, exceeding one thousand dollars ($1,000).

2. For all other dwelling units intended for human occupancy on or after January 1, 1987.

However, if any local rule, regulation, or ordinance, adopted prior to the compliance dates specified in paragraphs (1) and (2) requires installation in a dwelling unit intended for human occupancy of smoke detector, which receive their power from the electrical system of the building and requires compliance with the local rule, regulation, or ordinance at a date subsequent to the dates specified in this section, the compliance date specified in the rule, regulation, or ordinance shall, but only with respect to the dwelling units specified in this section, take precedence over the dates specified in this section.

The State Fire Marshal may adopt regulations exempting dwellings intended for human occupancy with fire sprinkler systems from the provisions of this section, if he or she determines that a smoke detector is not reasonably necessary for fire safety in the occupancy.

Unless prohibited by local rules, regulations, or ordinances, a battery-operated smoke detector which otherwise meets the standards adopted pursuant to Section 13114 for smoke detectors, satisfies the requirements of this section.

b. "Dwelling units intended for human occupancy," as used in this section, includes a duplex, lodging house, apartment complex, hotel, motel, condominium, stock cooperative, time-share project, or dwelling unit of a multiple-unit dwelling complex. For the purpose of this part, "dwelling units intended for human occupancy" does not include manufactured homes as defined in Section 18007, mobile homes as defined in Section 18008, and commercial coaches as defined in Section 18001.8.

c. The owner of each dwelling unit subject to this section shall supply and install smoke detectors required by this section in the locations and in the manner set forth in the manufacturer's instructions, as approved by the State Fire Marshal's regulations. In the case of apartment complexes and other multiple- dwelling complexes, a smoke detector shall be installed in the common stairwells. All fire alarm warning systems supplemental to the smoke detector shall also be listed by the State Fire Marshal.

d. A high-rise structure, as defined in subdivision (b) of Section 13210 and regulated by Chapter 3 (commencing with Section 13210), and which is used for purposes other than as dwelling units intended for human occupancy, is exempt from the requirements of this section.

e. The owner shall be responsible for testing and maintaining detectors in hotels, motels, lodging houses, and common stairwells of apartment complexes and other multiple-dwelling complexes.

An owner or the owner's agent may enter any dwelling unit, efficiency dwelling unit, guest room, and suite owned by the owner for the purpose of installing, repairing, testing, and maintaining single station smoke detectors required by this section. Except in cases of emergency, the owner or owner's agent shall give the tenants of each such unit, room, or suite reasonable notice in writing of the intention to enter and shall enter only during normal business hours. Twenty-four hours shall be presumed to be reasonable notice in absence of evidence to the contrary.

The smoke detector shall be operable at the time that the tenant takes possession. The apartment complex tenant shall be responsible for notifying the manager or owner if the tenant becomes aware of an inoperable smoke detector within his or her unit. The owner or authorized agent shall correct any reported deficiencies in the smoke detector and shall not be in violation of this section for a deficient smoke detector when he or she has not received notice of the deficiency.

f. A violation of this section is an infraction punishable by a maximum fine of two hundred dollars ($200) for each offense.

g. This section shall not affect any rights which the parties may have under any other provision of law because of the presence or absence of a smoke detector.

h. This section shall not apply to the installation of smoke detectors in single-family dwellings or factory-built housing which is regulated by Section 13113.8, as added by Assembly Bill No. 2285 of the 1983-84 Regular Session.

***R314.6.3 For purposes of clarification,** Health and Safety Code Section 13113.8 is repeated.*

a. On and after January 1, 1986, every single-family dwelling and factory-built housing, as defined in

Section 19971, which is sold shall have an operable smoke detector. The detector shall be approved and listed by the State Fire Marshal and installed in accordance with the State Fire Marshal's regulations. Unless prohibited by local rules, regulations, or ordinances, a battery-operated smoke detector shall be deemed to satisfy the requirements of this section.

b. On and after January 1, 1986, the transferor of any real property containing a single-family dwelling, as described in subdivision (a), whether the transfer is made by sale, exchange, or real property sales contract, as defined in Section 2985 of the Civil Code, shall deliver to the transferee a written statement indicating that the transferor is in compliance with this section. The disclosure statement shall be either included in the receipt for deposit in a real estate transaction, an addendum attached thereto, or a separate document.

c. The transferor shall deliver the statement referred to in subdivision (b) as soon as practicable before the transfer of title in the case of a sale or exchange, or prior to execution of the contract where the transfer is by a real property sales contract, as defined in Section 2985. For purposes of this subdivision, "delivery" means delivery in person or by mail to the transferee or transferor, or to any person authorized to act for him or her in the transaction, or to additional transferees who have requested delivery from the transferor in writing. Delivery to the spouse of a transferee or transferor shall be deemed delivery to a transferee or transferor, unless the contract states otherwise.

d. This section does not apply to any of the following:

1. Transfers which are required to be preceded by the furnishing to a prospective transferee of a copy of a public report pursuant to Section 11018.1 of the Business and Professions Code.

2. Transfers pursuant to court order, including, but not limited to, transfers ordered by a probate court in the administration of an estate, transfers pursuant to a writ of execution, transfers by a trustee in bankruptcy, transfers by eminent domain, or transfers resulting from a decree for specific performance.

3. Transfers to a mortgagee by a mortgagor in default, transfers to a beneficiary of a deed of trust by a trustor in default, transfers by any foreclosure sale after default, transfers by any foreclosure sale after default in an obligation secured by a mortgage, or transfers by a sale under a power of sale after a default in an obligation secured by a deed of trust or secured by any other instrument containing a power of sale.

4. Transfers by a fiduciary in the course of the administration of a decedent's estate, guardianship, conservatorship, or trust.

5. Transfers from one co-owner to one or more co-owners.

6. Transfers made to a spouse, or to a person or persons in the lineal line of consanguinity of one or more of the transferors.

7. Transfers between spouses resulting from a decree of dissolution of a marriage, from a decree of legal separation, or from a property settlement agreement incidental to either of those decrees.

8. Transfers by the Controller in the course of administering the Unclaimed Property Law provided for in Chapter 7 (commencing with Section 1500) of Title 10 of Part 3 of the Code of Civil Procedure.

9. Transfers under the provisions of Chapter 7 (commencing with Section 3691) or Chapter 8 (commencing with Section 3771) of Part 6 of Division 1 of the Revenue and Taxation Code.

e. No liability shall arise, nor any action be brought or maintained against, any agent of any party to a transfer of title, including any person or entity acting in the capacity of an escrow, for any error, inaccuracy, or omission relating to the disclosure required to be made by a transferor pursuant to this section. However, this subdivision does not apply to a licensee, as defined in Section 10011 of the Business and Professions Code, where the licensee participates in the making of the disclosure required to be made pursuant to this section with actual knowledge of the falsity of the disclosure.

f. Except as otherwise provided in this section, this section shall not be deemed to create or imply a duty upon a licensee, as defined in Section 10011 of the Business and Professions Code, or upon any agent of any party to a transfer of title, including any person or entity acting in the capacity of an escrow, to monitor or ensure compliance with this section.

g. No transfer of title shall be invalidated on the basis of a failure to comply with this section, and the exclusive remedy for the failure to comply with this section is an award of actual damages not to exceed one hundred dollars ($100), exclusive of any court costs and attorney's fees.

h. Local ordinances requiring smoke detectors in single-family dwellings may be enacted or amended. However, the ordinances shall satisfy the minimum requirements of this section.

i. For the purposes of this section, "single-family dwelling" does not include a manufactured home as defined in Section 18007, a mobilehome as defined in Section 18008, or a commercial coach as defined in Section 18001.8.

j. This section shall not apply to the installation of smoke detectors in dwellings intended for human occupancy, as defined in and regulated by Section

3771

13113.7 of the Health and Safety Code, as added by Senate Bill No. 1448 in the 1983-84 Regular Session.

SECTION R315
CARBON MONOXIDE ALARMS

R315.1 Carbon monoxide alarms in new construction. *For new construction, an approved carbon monoxide alarm shall be installed in dwelling units and in sleeping units within which fuel-burning appliances are installed and in dwelling units that have attached garages. Carbon monoxide alarms shall be listed as complying with UL 2034 and be installed and maintained in accordance with NFPA 720 and the manufacturer's instructions.*

R315.1.1 Carbon monoxide detection systems. *Carbon monoxide detection systems that include carbon monoxide detectors and audible notification appliances installed and maintained in accordance with this section for carbon monoxide alarms and NFPA 720 shall be permitted. The carbon monoxide detectors shall be listed as complying with UL 2075.*

R315.1.2 Power supply. *Carbon monoxide alarms shall receive their primary power from the building wiring where such wiring is served from a commercial source and shall be equipped with a battery back-up. Alarm wiring shall be directly connected to the permanent building wiring without a disconnecting switch other than as required for overcurrent protection.*

Exceptions:

1. *Where there is no commercial power supply, the carbon monoxide alarm may be solely battery operated.*
2. *Other power sources recognized for use by NFPA 720.*

R315.1.3 Interconnection. *Where more than one carbon monoxide alarm is required to be installed within the dwelling unit or within a sleeping unit, the alarm shall be interconnected in a manner that activation of one alarm shall activate all of the alarms in the individual unit.*

R315.1.4 Alarm requirements. *No person shall install, market, distribute, offer for sale or sell any carbon monoxide device in the State of California unless the device and instructions have been approved and listed by the State Fire Marshal.*

Carbon monoxide alarms required by Section R315.1 shall be installed and maintained in the following locations:

1. *Outside of each separate dwelling unit sleeping area in the immediate vicinity of the bedroom(s).*
2. *On every level of a dwelling unit including basements.*

R315.1.5 Multiple-purpose alarms. *Carbon monoxide alarms combined with smoke alarms shall comply with Section R315, all applicable standards, and requirements for listing and approval by the Office of the State Fire Marshal, for smoke alarms.*

R315.2 Carbon monoxide alarms in existing dwelling units and sleeping units. *An approved carbon monoxide alarm shall be installed in existing dwellings having a fossil fuel-burning heater or appliance, fireplace or an attached garage. Carbon monoxide alarms shall be listed as complying with UL 2034 and be installed and maintained in accordance with NFPA 720 and the manufacturer's instructions.*

R315.2.1 Carbon monoxide detection systems. *Carbon monoxide detection systems that include carbon monoxide detectors and audible notification appliances, installed and maintained in accordance with this section for carbon monoxide alarms and NFPA720 shall be permitted. The carbon monoxide detectors shall be listed as complying with UL 2075.*

R315.2.2 Existing dwellings or sleeping units requiring a permit. *When a permit is required for alterations, repairs or additions with a total cost or calculated valuation exceeding one thousand dollars ($1,000), existing dwellings or sleeping units with a fossil fuel-burning heater or appliance, fireplace, or an attached garage shall have a carbon monoxide alarm installed in accordance with Section R315.2.Carbon monoxide alarms shall only be required in the specific dwelling unit or sleeping unit for which the permit was obtained.*

R315.2.3 Existing dwellings or sleeping units not requiring a permit (no construction taking place). *Pursuant to Health and Safety Code Section 17926, a carbon monoxide alarm(s) shall be installed in every existing dwelling unit or sleeping unit with a fossil fuel-burning heater or appliance, fireplace, or an attached garage as follows:*

R315.2.3.1 Carbon monoxide alarms on or after July 1, 2011. *Carbon monoxide alarms shall be installed in accordance with Section R315.2 in existing detached single-family dwellings or sleeping units intended for human occupancy that have a fossil fuel-burning heater or appliance, fireplace or an attached garage. Carbon monoxide alarms in existing buildings are permitted to be solely battery operated or plug-in type with battery back-up in areas where no construction is taking place.*

R315.2.3.2 Carbon monoxide alarms on or after January 1, 2013. *Carbon monoxide alarms shall be installed in accordance with Section R315.2 in all other existing dwelling units intended for human occupancy as defined in Health and Safety Code Section 13262(b) that have a fossil fuel-burning heater or appliance, fireplace or an attached garage. Carbon monoxide alarms in existing buildings are permitted to be solely battery operated or plug-in type with battery back-up in areas where no construction is taking place.*

R315.2.4 Power supply. *Carbon monoxide alarms shall receive their primary power from the building wiring where such wiring is served from a commercial source and shall be equipped with a battery back-up.*

Alarm wiring shall be directly connected to the permanent building wiring without a disconnecting switch other than as required for overcurrent protection.

Exceptions:

1. *In existing dwelling units where there is no commercial power supply, the carbon monoxide alarm may be solely battery operated.*
2. *In existing dwelling units, a carbon monoxide alarm is permitted to be solely battery operated or plug-in with battery back-up where repairs or alterations do not result in the removal of wall and ceiling finishes.*
3. *In existing dwelling units, a carbon monoxide alarm is permitted to be solely battery operated or plug-in with battery back-up where repairs or alterations are limited to the exterior surfaces of dwellings, such as the replacement of roofing or siding, or the addition or replacement of windows or doors, or the addition of a porch or deck.*
4. *In existing dwelling units, a carbon monoxide alarm is permitted to be solely battery operated or plug-in with battery back-up when work is limited to the installation, alteration or repair of plumbing or mechanical systems or the installation, alteration or repair of electrical systems, which do not result in the removal of interior wall or ceiling finishes exposing the structure.*
5. *Other power sources recognized for use by NFPA 720.*

R315.2.5 Interconnection. *Where more than one carbon monoxide alarm is required to be installed within the dwelling unit or within a sleeping unit, the alarm shall be interconnected in a manner that activation of one alarm shall activate all of the alarms in the individual unit.*

Exceptions:

1. *In existing dwelling units, interconnection is not required where repairs do not result in the removal of wall and ceiling finishes and no previous method for interconnection existed.*
2. *In existing dwelling units, carbon monoxide alarms are not required to be interconnected where no construction is taking place.*
3. *In existing dwelling units, carbon monoxide alarms are not required to be interconnected where repairs or alterations are limited to the exterior surfaces of dwellings, such as the replacement of roofing or siding, or the addition or replacement of windows or doors, or the addition of a porch or deck.*
4. *In existing dwelling units, carbon monoxide alarms are not required to be interconnected when work is limited to the installation, alteration or repair of plumbing or mechanical systems or the installation, alteration or repair of electrical systems, which do not result in the removal of interior wall or ceiling finishes exposing the structure.*

R315.2.6 Alarm requirements. *No person shall install, market, distribute, offer for sale, or sell any carbon monoxide device in the State of California unless the device and instructions have been approved and listed by the State Fire Marshal.*

Carbon monoxide alarms required by Section R315.2 shall be installed in the following locations:

1. *Outside of each separate dwelling unit sleeping area in the immediate vicinity of the bedroom(s).*
2. *On every level of a dwelling unit including basements.*

SECTION R316
FOAM PLASTIC

R316.1 General. The provisions of this section shall govern the materials, design, application, construction and installation of foam plastic materials.

R316.2 Labeling and identification. Packages and containers of foam plastic insulation and foam plastic insulation components delivered to the job site shall bear the label of an approved agency showing the manufacturer's name, the product listing, product identification and information sufficient to determine that the end use will comply with the requirements.

R316.3 Surface burning characteristics. Unless otherwise allowed in Section R316.5 or R316.6, all foam plastic or foam plastic cores used as a component in manufactured assemblies used in building construction shall have a flame spread index of not more than 75 and shall have a smoke-developed index of not more than 450 when tested in the maximum thickness intended for use in accordance with ASTM E 84 or UL 723. Loose-fill-type foam plastic insulation shall be tested as board stock for the flame spread index and smoke-developed index.

Exception: Foam plastic insulation more than 4 inches (102 mm) thick shall have a maximum flame spread index of 75 and a smoke-developed index of 450 where tested at a minimum thickness of 4 inches (102 mm), provided the end use is approved in accordance with Section R316.6 using the thickness and density intended for use.

R316.4 Thermal barrier. Unless otherwise allowed in Section R316.5 or Section R316.6, foam plastic shall be separated from the interior of a building by an approved thermal barrier of minimum $^1/_2$ inch (12.7 mm) gypsum wallboard or a material that is tested in accordance with and meets the acceptance criteria of both the Temperature Transmission Fire Test and the Integrity Fire Test of NFPA 275.

R316.5 Specific requirements. The following requirements shall apply to these uses of foam plastic unless specifically approved in accordance with Section R316.6 or by other sections of the code or the requirements of Sections R316.2 through R316.4 have been met.

R316.5.1 Masonry or concrete construction. The thermal barrier specified in Section R316.4 is not required in a masonry or concrete wall, floor or roof when the foam plastic insulation is separated from the interior of the building by a minimum 1-inch (25 mm) thickness of masonry or concrete.

R316.5.2 Roofing. The thermal barrier specified in Section R316.4 is not required when the foam plastic in a roof assembly or under a roof covering is installed in accordance with the code and the manufacturer's installation instructions and is separated from the interior of the building by tongue-and-groove wood planks or wood structural panel sheathing in accordance with Section R803, not less than $^{15}/_{32}$ inch (11.9 mm) thick bonded with exterior glue and identified as Exposure 1, with edges supported by blocking or tongue-and-groove joints or an equivalent material. The smoke-developed index for roof applications shall not be limited.

R316.5.3 Attics. The thermal barrier specified in Section R316.4 is not required where all of the following apply:

1. Attic access is required by Section R807.1.
2. The space is entered only for purposes of repairs or maintenance.
3. The foam plastic insulation is protected against ignition using one of the following ignition barrier materials:
   - 3.1. $1^1/_2$-inch-thick (38 mm) mineral fiber insulation;
   - 3.2. $^1/_4$-inch-thick (6.4 mm) wood structural panels;
   - 3.3. $^3/_8$-inch (9.5 mm) particleboard;
   - 3.4. $^1/_4$-inch (6.4 mm) hardboard;
   - 3.5. $^3/_8$-inch (9.5 mm) gypsum board; or
   - 3.6. Corrosion-resistant steel having a base metal thickness of 0.016 inch (0.406 mm);
   - 3.7. $1^1/_2$-inch-thick (38 mm) cellulose insulation.

The above ignition barrier is not required where the foam plastic insulation has been tested in accordance with Section R316.6.

R316.5.4 Crawl spaces. The thermal barrier specified in Section R316.4 is not required where all of the following apply:

1. Crawlspace access is required by Section R408.4
2. Entry is made only for purposes of repairs or maintenance.
3. The foam plastic insulation is protected against ignition using one of the following ignition barrier materials:
   - 3.1. $1^1/_2$-inch-thick (38 mm) mineral fiber insulation;
   - 3.2. $^1/_4$-inch-thick (6.4 mm) wood structural panels;
   - 3.3. $^3/_8$-inch (9.5 mm) particleboard;
   - 3.4. $^1/_4$-inch (6.4 mm) hardboard;
   - 3.5. $^3/_8$-inch (9.5 mm) gypsum board; or
   - 3.6. Corrosion-resistant steel having a base metal thickness of 0.016 inch (0.406 mm).

The above ignition barrier is not required where the foam plastic insulation has been tested in accordance with Section R316.6.

R316.5.5 Foam-filled exterior doors. Foam-filled exterior doors are exempt from the requirements of Sections R316.3 and R316.4.

R316.5.6 Foam-filled garage doors. Foam-filled garage doors in attached or detached garages are exempt from the requirements of Sections R316.3 and R316.4.

R316.5.7 Foam backer board. The thermal barrier specified in Section R316.4 is not required where siding backer board foam plastic insulation has a maximum thickness of 0.5 inch (12.7 mm) and a potential heat of not more than 2000 Btu per square foot (22 720 kJ/m^2) when tested in accordance with NFPA 259 provided that:

1. The foam plastic insulation is separated from the interior of the building by not less than 2 inches (51 mm) of mineral fiber insulation;
2. The foam plastic insulation is installed over existing exterior wall finish in conjunction with re-siding; or
3. The foam plastic insulation has been tested in accordance with Section R316.6.

R316.5.8 Re-siding. The thermal barrier specified in Section R316.4 is not required where the foam plastic insulation is installed over existing exterior wall finish in conjunction with re-siding provided the foam plastic has a maximum thickness of 0.5 inch (12.7 mm) and a potential heat of not more than 2000 Btu per square foot (22 720 kJ/m^2) when tested in accordance with NFPA 259.

R316.5.9 Interior trim. The thermal barrier specified in Section R316.4 is not required for exposed foam plastic interior trim, provided all of the following are met:

1. The minimum density is 20 pounds per cubic foot (320 kg/m^3).
2. The maximum thickness of the trim is 0.5 inch (12.7 mm) and the maximum width is 8 inches (204 mm).
3. The interior trim shall not constitute more than 10 percent of the aggregate wall and ceiling area of any room or space.
4. The flame spread index does not exceed 75 when tested per ASTM E 84 or UL 723. The smoke-developed index is not limited.

R316.5.10 Interior finish. Foam plastics shall be permitted as interior finish where approved in accordance with Section R316.6 Foam plastics that are used as interior finish shall also meet the flame spread index and smoke-developed index requirements of Sections R302.9.1 and R302.9.2.

R316.5.11 Sill plates and headers. Foam plastic shall be permitted to be spray applied to a sill plate and header without the thermal barrier specified in Section R316.4 subject to all of the following:

1. The maximum thickness of the foam plastic shall be $3^1/_4$ inches (83 mm).
2. The density of the foam plastic shall be in the range of 0.5 to 2.0 pounds per cubic foot (8 to 32 kg/m^3).
3. The foam plastic shall have a flame spread index of 25 or less and an accompanying smoke-developed index of 450 or less when tested in accordance with ASTM E 84 or UL 723.

R316.5.12 Sheathing. Foam plastic insulation used as sheathing shall comply with Section R316.3 and Section R316.4. Where the foam plastic sheathing is exposed to the attic space at a gable or kneewall, the provisions of Section R316.5.3 shall apply.

R316.5.13 Floors. The thermal barrier specified in Section R316.4 is not required to be installed on the walking surface of a structural floor system that contains foam plastic insulation when the foam plastic is covered by a minimum nominal $^1/_2$-inch-thick (12.7 mm) wood structural panel or equivalent. The thermal barrier specified in Section R316.4 is required on the underside of the structural floor system that contains foam plastic insulation when the underside of the structural floor system is exposed to the interior of the building.

R316.6 Specific approval. Foam plastic not meeting the requirements of Sections R316.3 through R316.5 shall be specifically approved on the basis of one of the following approved tests: NFPA 286 with the acceptance criteria of Section R302.9.4, FM4880, UL 1040, or UL 1715, or fire tests related to actual end-use configurations. Approval shall be based on the actual end use configuration and shall be performed on the finished foam plastic assembly in the maximum thickness intended for use. Assemblies tested shall include seams, joints and other typical details used in the installation of the assembly and shall be tested in the manner intended for use.

R316.7 Termite damage. The use of foam plastics in areas of "very heavy" termite infestation probability shall be in accordance with Section R318.4.

SECTION R317
PROTECTION OF WOOD AND WOOD BASED PRODUCTS AGAINST DECAY

R317.1 Location required. Protection of wood and wood based products from decay shall be provided in the following locations by the use of naturally durable wood or wood that is preservative-treated in accordance with AWPA U1 for the species, product, preservative and end use. Preservatives shall be listed in Section 4 of AWPA U1.

1. Wood joists or the bottom of a wood structural floor when closer than 18 inches (457 mm) or wood girders when closer than 12 inches (305 mm) to the exposed ground in crawl spaces or unexcavated area located within the periphery of the building foundation.
2. All wood framing members that rest on concrete or masonry exterior foundation walls and are less than 8 inches (203 mm) from the exposed ground.
3. Sills and sleepers on a concrete or masonry slab that is in direct contact with the ground unless separated from such slab by an impervious moisture barrier.
4. The ends of wood girders entering exterior masonry or concrete walls having clearances of less than $^1/_2$ inch (12.7 mm) on tops, sides and ends.
5. Wood siding, sheathing and wall framing on the exterior of a building having a clearance of less than 6 inches (152 mm) from the ground or less than 2 inches (51 mm) measured vertically from concrete steps, porch slabs, patio slabs, and similar horizontal surfaces exposed to the weather.
6. Wood structural members supporting moisture-permeable floors or roofs that are exposed to the weather, such as concrete or masonry slabs, unless separated from such floors or roofs by an impervious moisture barrier.
7. Wood furring strips or other wood framing members attached directly to the interior of exterior masonry walls or concrete walls below grade except where an approved vapor retarder is applied between the wall and the furring strips or framing members.

R317.1.1 Field treatment. Field-cut ends, notches and drilled holes of preservative-treated wood shall be treated in the field in accordance with AWPA M4.

R317.1.2 Ground contact. All wood in contact with the ground, embedded in concrete in direct contact with the ground or embedded in concrete exposed to the weather that supports permanent structures intended for human occupancy shall be approved pressure-preservative-treated wood suitable for ground contact use, except untreated wood may be used where entirely below groundwater level or continuously submerged in fresh water.

R317.1.3 Geographical areas. In geographical areas where experience has demonstrated a specific need, approved naturally durable or pressure-preservative-treated wood shall be used for those portions of wood members that form the structural supports of buildings, balconies, porches or similar permanent building appurtenances when those members are exposed to the weather without adequate protection from a roof, eave, overhang or other covering that would prevent moisture or water accumulation on the surface or at joints between members. Depending on local experience, such members may include:

1. Horizontal members such as girders, joists and decking.
2. Vertical members such as posts, poles and columns.
3. Both horizontal and vertical members.

R317.1.4 Wood columns. Wood columns shall be approved wood of natural decay resistance or approved pressure-preservative-treated wood.

Exceptions:

1. Columns exposed to the weather or in basements when supported by concrete piers or metal pedestals projecting 1 inch (25.4 mm) above a concrete floor or 6 inches (152 mm) above exposed earth and the earth is covered by an approved impervious moisture barrier.
2. Columns in enclosed crawl spaces or unexcavated areas located within the periphery of the building when supported by a concrete pier or metal pedestal at a height more than 8 inches (203 mm) from exposed earth and the earth is covered by an impervious moisture barrier.

R317.1.5 Exposed glued-laminated timbers. The portions of glued-laminated timbers that form the structural supports of a building or other structure and are exposed to weather and not properly protected by a roof, eave or similar covering shall be pressure treated with preservative, or be manufactured from naturally durable or preservative-treated wood.

R317.2 Quality mark. Lumber and plywood required to be pressure-preservative-treated in accordance with Section R318.1 shall bear the quality mark of an approved inspection agency that maintains continuing supervision, testing and inspection over the quality of the product and that has been approved by an accreditation body that complies with the requirements of the American Lumber Standard Committee treated wood program.

R317.2.1 Required information. The required quality mark on each piece of pressure-preservative-treated lumber or plywood shall contain the following information:

1. Identification of the treating plant.
2. Type of preservative.
3. The minimum preservative retention.
4. End use for which the product was treated.
5. Standard to which the product was treated.
6. Identity of the approved inspection agency.
7. The designation "Dry," if applicable.

Exception: Quality marks on lumber less than 1 inch (25.4 mm) nominal thickness, or lumber less than nominal 1 inch by 5 inches (25.4 mm by 127 mm) or 2 inches by 4 inches (51 mm by 102 mm) or lumber 36 inches (914 mm) or less in length shall be applied by stamping the faces of exterior pieces or by end labeling not less than 25 percent of the pieces of a bundled unit.

R317.3 Fasteners and connectors in contact with preservative-treated and fire-retardant-treated wood. Fasteners, including nuts and washers, and connectors in contact with preservative-treated wood and fire-retardant-treated wood shall be in accordance with this section. The coating weights for zinc-coated fasteners shall be in accordance with ASTM A 153.

R317.3.1 Fasteners for preservative-treated wood. Fasteners, including nuts and washers, for preservative-treated wood shall be of hot-dipped, zinc-coated galvanized steel, stainless steel, silicon bronze or copper. Coating types and weights for connectors in contact with preservative-treated wood shall be in accordance with the connector manufacturer's recommendations. In the absence of manufacturer's recommendations, a minimum of ASTM A 653 type G185 zinc-coated galvanized steel, or equivalent, shall be used.

Exceptions:

1. One-half-inch-diameter (12.7 mm) or greater steel bolts.
2. Fasteners other than nails and timber rivets shall be permitted to be of mechanically deposited zinc-coated steel with coating weights in accordance with ASTM B 695, Class 55 minimum.
3. Plain carbon steel fasteners in SBX/DOT and zinc borate preservative-treated wood in an interior, dry environment shall be permitted.

R317.3.2 Fastenings for wood foundations. Fastenings, including nuts and washers, for wood foundations shall be as required in AF&PA PWF.

R317.3.3 Fasteners for fire-retardant-treated wood used in exterior applications or wet or damp locations. Fasteners, including nuts and washers, for fire-retardant-treated wood used in exterior applications or wet or damp locations shall be of hot-dipped, zinc-coated galvanized steel, stainless steel, silicon bronze or copper. Fasteners other than nails and timber rivets shall be permitted to be of mechanically deposited zinc-coated steel with coating weights in accordance with ASTM B 695, Class 55 minimum.

R317.3.4 Fasteners for fire-retardant-treated wood used in interior applications. Fasteners, including nuts and washers, for fire-retardant-treated wood used in interior locations shall be in accordance with the manufacturer's recommendations. In the absence of the manufacturer's recommendations, Section R317.3.3 shall apply.

R317.4 Wood/plastic composites. Wood/plastic composites used in exterior deck boards, stair treads, handrails and guardrail systems shall bear a label indicating the required performance levels and demonstrating compliance with the provisions of ASTM D 7032.

R317.4.1 Labeling. Deck boards and stair treads shall bear a label that indicates compliance to ASTM D 7032 and includes the allowable load and maximum allowable span. Handrails and guardrail systems or their packaging shall bear a label that indicates compliance to ASTM D 7032 and includes the maximum allowable span.

R317.4.2 Installation. Wood/plastic composites shall be installed in accordance with the manufacturer's instructions.

SECTION R318
PROTECTION AGAINST SUBTERRANEAN TERMITES

R318.1 Subterranean termite control methods. In areas subject to damage from termites as indicated by Table R301.2(1), methods of protection shall be one of the following methods or a combination of these methods:

1. Chemical termiticide treatment, as provided in Section R318.2.
2. Termite baiting system installed and maintained according to the label.
3. Pressure-preservative-treated wood in accordance with the provisions of Section R317.1.
4. Naturally durable termite-resistant wood.
5. Physical barriers as provided in Section R318.3 and used in locations as specified in Section R317.1.
6. Cold-formed steel framing in accordance with Sections R505.2.1 and R603.2.1.

R318.1.1 Quality mark. Lumber and plywood required to be pressure-preservative-treated in accordance with Section R318.1 shall bear the quality mark of an approved inspection agency which maintains continuing supervision, testing and inspection over the quality of the product and which has been approved by an accreditation body which complies with the requirements of the American Lumber Standard Committee treated wood program.

R318.1.2 Field treatment. Field-cut ends, notches, and drilled holes of pressure-preservative-treated wood shall be retreated in the field in accordance with AWPA M4.

R318.2 Chemical termiticide treatment. Chemical termiticide treatment shall include soil treatment and/or field applied wood treatment. The concentration, rate of application and method of treatment of the chemical termiticide shall be in strict accordance with the termiticide label.

R318.3 Barriers. Approved physical barriers, such as metal or plastic sheeting or collars specifically designed for termite prevention, shall be installed in a manner to prevent termites from entering the structure. Shields placed on top of an exterior foundation wall are permitted to be used only if in combination with another method of protection.

R318.4 Foam plastic protection. In areas where the probability of termite infestation is "very heavy" as indicated in Figure R301.2(6), extruded and expanded polystyrene, polyisocyanurate and other foam plastics shall not be installed on the exterior face or under interior or exterior foundation walls or slab foundations located below grade. The clearance between foam plastics installed above grade and exposed earth shall be at least 6 inches (152 mm).

Exceptions:

1. Buildings where the structural members of walls, floors, ceilings and roofs are entirely of noncombustible materials or pressure-preservative-treated wood.
2. When in addition to the requirements of Section R318.1, an approved method of protecting the foam plastic and structure from subterranean termite damage is used.
3. On the interior side of basement walls.

SECTION R319
SITE ADDRESS

R319.1 Address numbers. Buildings shall have approved address numbers, building numbers or approved building identification placed in a position that is plainly legible and visible from the street or road fronting the property. These numbers shall contrast with their background. Address numbers shall be Arabic numbers or alphabetical letters. Numbers shall be a minimum of 4 inches (102 mm) high with a minimum stroke width of $^1/_2$ inch (12.7 mm). Where access is by means of a private road and the building address cannot be viewed from the public way, a monument, pole or other sign or means shall be used to identify the structure.

SECTION R320
ACCESSIBILITY

R320.1 Scope. *Dwelling units in a building consisting of three or more dwelling units or four or more condominium units shall meet the requirements of the California Building Code Chapter 11A. Covered Multifamily Dwellings include but are not limited to dwelling units listed in Section 1.8.2.1.2. Dwelling units within a single structure separated by firewalls do not constitute separate buildings.*

SECTION R321
ELEVATORS AND PLATFORM LIFTS

R321.1 Elevators. Where provided, passenger elevators, limited-use/limited-application elevators or private residence elevators shall comply with ASME A17.1/CSA B44.

R321.2 Platform lifts. Where provided, platform lifts shall comply with ASME A18.1.

R321.3 Accessibility. Elevators or platform *(wheelchair)* lifts that are part of an accessible route required by Chapter 11A of the *California Building Code*, shall comply with *requirements in Section 1124A of the California Building Code.*

SECTION R322
FLOOD-RESISTANT CONSTRUCTION

R322.1 General. Buildings and structures constructed in whole or in part in flood hazard areas (including A or V Zones) as established in Table R301.2(1) shall be designed and constructed in accordance with the provisions contained in this section. Buildings and structures located in whole or in part in identified floodways shall be designed and constructed in accordance with ASCE 24.

R322.1.1 Alternative provisions. As an alternative to the requirements in Section R322.3 for buildings and structures located in whole or in part in coastal high-hazard areas (V Zones) and Coastal A Zones, if delineated, ASCE

24 is permitted subject to the limitations of this code and the limitations therein.

R322.1.2 Structural systems. All structural systems of all buildings and structures shall be designed, connected and anchored to resist flotation, collapse or permanent lateral movement due to structural loads and stresses from flooding equal to the design flood elevation.

R322.1.3 Flood-resistant construction. All buildings and structures erected in areas prone to flooding shall be constructed by methods and practices that minimize flood damage.

R322.1.4 Establishing the design flood elevation. The design flood elevation shall be used to define flood hazard areas. At a minimum, the design flood elevation is the higher of:

1. The base flood elevation at the depth of peak elevation of flooding (including wave height) which has a 1 percent (100-year flood) or greater chance of being equaled or exceeded in any given year; or
2. The elevation of the design flood associated with the area designated on a flood hazard map adopted by the community, or otherwise legally designated.

R322.1.4.1 Determination of design flood elevations. If design flood elevations are not specified, the building official is authorized to require the applicant to:

1. Obtain and reasonably use data available from a federal, state or other source; or
2. Determine the design flood elevation in accordance with accepted hydrologic and hydraulic engineering practices used to define special flood hazard areas. Determinations shall be undertaken by a registered design professional who shall document that the technical methods used reflect currently accepted engineering practice. Studies, analyses and computations shall be submitted in sufficient detail to allow thorough review and approval.

R322.1.4.2 Determination of impacts. In riverine flood hazard areas where design flood elevations are specified but floodways have not been designated, the applicant shall demonstrate that the effect of the proposed buildings and structures on design flood elevations, including fill, when combined with all other existing and anticipated flood hazard area encroachments, will not increase the design flood elevation more than 1 foot (305 mm) at any point within the jurisdiction.

R322.1.5 Lowest floor. The lowest floor shall be the floor of the lowest enclosed area, including basement, but excluding any unfinished flood-resistant enclosure that is useable solely for vehicle parking, building access or limited storage provided that such enclosure is not built so as to render the building or structure in violation of this section.

R322.1.6 Protection of mechanical and electrical systems. Electrical systems, equipment and components; heating, ventilating, air conditioning; plumbing appliances and plumbing fixtures; duct systems; and other service equipment shall be located at or above the elevation required in Section R322.2 (flood hazard areas including A Zones) or R322.3 (coastal high-hazard areas including V Zones). If replaced as part of a substantial improvement, electrical systems, equipment and components; heating, ventilating, air conditioning and plumbing appliances and plumbing fixtures; duct systems; and other service equipment shall meet the requirements of this section. Systems, fixtures, and equipment and components shall not be mounted on or penetrate through walls intended to break away under flood loads.

Exception: Locating electrical systems, equipment and components; heating, ventilating, air conditioning; plumbing appliances and plumbing fixtures; duct systems; and other service equipment is permitted below the elevation required in Section R322.2 (flood hazard areas including A Zones) or R322.3 (coastal high-hazard areas including V Zones) provided that they are designed and installed to prevent water from entering or accumulating within the components and to resist hydrostatic and hydrodynamic loads and stresses, including the effects of buoyancy, during the occurrence of flooding to the design flood elevation in accordance with ASCE 24. Electrical wiring systems are permitted to be located below the required elevation provided they conform to the provisions of the *California Electrical Code* for wet locations.

R322.1.7 Protection of water supply and sanitary sewage systems. Water supply systems shall be designed to minimize or eliminate infiltration of flood waters into the water supply and distribution system. Sanitary sewage systems shall be designed to minimize or eliminate infiltration of floodwaters into sanitary drainage systems and discharges from sanitary drainage systems into floodwaters.

R322.1.8 Flood-resistant materials. Building materials used below the elevation required in Section R322.2 (flood hazard areas including A Zones) or R322.3 (coastal high-hazard areas including V Zones) shall comply with the following:

1. All wood, including floor sheathing, shall be pressure-preservative-treated in accordance with AWPA U1 for the species, product, preservative and end use or be the decay-resistant heartwood of redwood, black locust or cedars. Preservatives shall be listed in Section 4 of AWPA U1.
2. Materials and installation methods used for flooring and interior and exterior walls and wall coverings shall conform to the provisions of FEMA/FIA-TB-2.

R322.1.9 As-built elevation documentation. A registered design professional shall prepare and seal documentation of the elevations specified in Section R322.2 or R322.3.

R322.2 Flood hazard areas (including A Zones). All areas that have been determined to be prone to flooding but not subject to high-velocity wave action shall be designated as flood hazard areas. Flood hazard areas that have been delin-

3778

eated as subject to wave heights between $1^1/_2$ feet (457 mm) and 3 feet (914 mm) shall be designated as Coastal A Zones. All building and structures constructed in whole or in part in flood hazard areas shall be designed and constructed in accordance with Sections R322.2.1 through R322.2.3.

R322.2.1 Elevation requirements.

1. Buildings and structures in flood hazard areas not designated as Coastal A Zones shall have the lowest floors elevated to or above the design flood elevation.
2. Buildings and structures in flood hazard areas designated as Coastal A Zones shall have the lowest floors elevated to or above the base flood elevation plus 1 foot (305 mm), or to the design flood elevation, whichever is higher.
3. In areas of shallow flooding (AO Zones), buildings and structures shall have the lowest floor (including basement) elevated at least as high above the highest adjacent grade as the depth number specified in feet on the FIRM, or at least 2 feet (610 mm) if a depth number is not specified.
4. Basement floors that are below grade on all sides shall be elevated to or above the design flood elevation.

Exception: Enclosed areas below the design flood elevation, including basements whose floors are not below grade on all sides, shall meet the requirements of Section R322.2.2.

R322.2.2 Enclosed area below design flood elevation. Enclosed areas, including crawl spaces, that are below the design flood elevation shall:

1. Be used solely for parking of vehicles, building access or storage.
2. Be provided with flood openings that meet the following criteria:
   - 2.1. There shall be a minimum of two openings on different sides of each enclosed area; if a building has more than one enclosed area below the design flood elevation, each area shall have openings on exterior walls.
   - 2.2. The total net area of all openings shall be at least 1 square inch (645 mm^2) for each square foot (0.093 m^2) of enclosed area, or the openings shall be designed and the construction documents shall include a statement by a registered design professional that the design of the openings will provide for equalization of hydrostatic flood forces on exterior walls by allowing for the automatic entry and exit of floodwaters as specified in Section 2.6.2.2 of ASCE 24.
   - 2.3. The bottom of each opening shall be 1 foot (305 mm) or less above the adjacent ground level.
   - 2.4. Openings shall be not less than 3 inches (76 mm) in any direction in the plane of the wall.
   - 2.5. Any louvers, screens or other opening covers shall allow the automatic flow of floodwaters into and out of the enclosed area.
   - 2.6. Openings installed in doors and windows, that meet requirements 2.1 through 2.5, are acceptable; however, doors and windows without installed openings do not meet the requirements of this section.

R322.2.3 Foundation design and construction. Foundation walls for all buildings and structures erected in flood hazard areas shall meet the requirements of Chapter 4.

Exception: Unless designed in accordance with Section R404:

1. The unsupported height of 6-inch (152 mm) plain masonry walls shall be no more than 3 feet (914 mm).
2. The unsupported height of 8-inch (203 mm) plain masonry walls shall be no more than 4 feet (1219 mm).
3. The unsupported height of 8-inch (203 mm) reinforced masonry walls shall be no more than 8 feet (2438 mm).

For the purpose of this exception, unsupported height is the distance from the finished grade of the under-floor space to the top of the wall.

R322.3 Coastal high-hazard areas (including V Zones). Areas that have been determined to be subject to wave heights in excess of 3 feet (914 mm) or subject to high-velocity wave action or wave-induced erosion shall be designated as coastal high-hazard areas. Buildings and structures constructed in whole or in part in coastal high-hazard areas shall be designed and constructed in accordance with Sections R322.3.1 through R322.3.6.

R322.3.1 Location and site preparation.

1. New buildings and buildings that are determined to be substantially improved pursuant to Section R105.3.1.1, shall be located landward of the reach of mean high tide.
2. For any alteration of sand dunes and mangrove stands the building official shall require submission of an engineering analysis which demonstrates that the proposed alteration will not increase the potential for flood damage.

R322.3.2 Elevation requirements.

1. All buildings and structures erected within coastal high-hazard areas shall be elevated so that the lowest portion of all structural members supporting the lowest floor, with the exception of piling, pile caps, columns, grade beams and bracing, is:
   - 1.1. Located at or above the design flood elevation, if the lowest horizontal structural member is oriented parallel to the direction of wave approach, where parallel shall mean

less than or equal to 20 degrees (0.35 rad) from the direction of approach, or

1.2. Located at the base flood elevation plus 1 foot (305 mm), or the design flood elevation, whichever is higher, if the lowest horizontal structural member is oriented perpendicular to the direction of wave approach, where perpendicular shall mean greater than 20 degrees (0.35 rad) from the direction of approach.

2. Basement floors that are below grade on all sides are prohibited.
3. The use of fill for structural support is prohibited.
4. Minor grading, and the placement of minor quantities of fill, shall be permitted for landscaping and for drainage purposes under and around buildings and for support of parking slabs, pool decks, patios and walkways.

Exception: Walls and partitions enclosing areas below the design flood elevation shall meet the requirements of Sections R322.3.4 and R322.3.5.

R322.3.3 Foundations. Buildings and structures erected in coastal high-hazard areas shall be supported on pilings or columns and shall be adequately anchored to such pilings or columns. The space below the elevated building shall be either free of obstruction or, if enclosed with walls, the walls shall meet the requirements of Section R322.3.4. Pilings shall have adequate soil penetrations to resist the combined wave and wind loads (lateral and uplift). Water-loading values used shall be those associated with the design flood. Wind-loading values shall be those required by this code. Pile embedment shall include consideration of decreased resistance capacity caused by scour of soil strata surrounding the piling. Pile systems design and installation shall be certified in accordance with Section R322.3.6. Spread footing, mat, raft or other foundations that support columns shall not be permitted where soil investigations that are required in accordance with Section R401.4 indicate that soil material under the spread footing, mat, raft or other foundation is subject to scour or erosion from wave-velocity flow conditions. If permitted, spread footing, mat, raft or other foundations that support columns shall be designed in accordance with ASCE 24. Slabs, pools, pool decks and walkways shall be located and constructed to be structurally independent of buildings and structures and their foundations to prevent transfer of flood loads to the buildings and structures during conditions of flooding, scour or erosion from wave-velocity flow conditions, unless the buildings and structures and their foundation are designed to resist the additional flood load.

R322.3.4 Walls below design flood elevation. Walls and partitions are permitted below the elevated floor, provided that such walls and partitions are not part of the structural support of the building or structure and:

1. Electrical, mechanical, and plumbing system components are not to be mounted on or penetrate through walls that are designed to break away under flood loads; and
2. Are constructed with insect screening or open lattice; or
3. Are designed to break away or collapse without causing collapse, displacement or other structural damage to the elevated portion of the building or supporting foundation system. Such walls, framing and connections shall have a design safe loading resistance of not less than 10 (479 Pa) and no more than 20 pounds per square foot (958 Pa); or
4. Where wind loading values of this code exceed 20 pounds per square foot (958 Pa), the construction documents shall include documentation prepared and sealed by a registered design professional that:

4.1. The walls and partitions below the design flood elevation have been designed to collapse from a water load less than that which would occur during the design flood.

4.2. The elevated portion of the building and supporting foundation system have been designed to withstand the effects of wind and flood loads acting simultaneously on all building components (structural and nonstructural). Water-loading values used shall be those associated with the design flood. Wind-loading values shall be those required by this code.

R322.3.5 Enclosed areas below design flood elevation. Enclosed areas below the design flood elevation shall be used solely for parking of vehicles, building access or storage.

R322.3.6 Construction documents. The construction documents shall include documentation that is prepared and sealed by a registered design professional that the design and methods of construction to be used meet the applicable criteria of this section.

SECTION R323
STORM SHELTERS

R323.1 General. This section applies to the construction of storm shelters when constructed as separate detached buildings or when constructed as safe rooms within buildings for the purpose of providing safe refuge from storms that produce high winds, such as tornados and hurricanes. In addition to other applicable requirements in this code, storm shelters shall be constructed in accordance with ICC/NSSA-500.

SECTION R324
CONSTRUCTION WASTE REDUCTION, DISPOSAL AND RECYCLING

R324.1 Construction waste management. *Recycle and/or salvage for reuse a minimum of 50 percent of the nonhazardous construction and demolition waste in accordance with the California Green Building Standards Code, Chapter 4, Division 4.4.*

3780

SECTION R325
SPECIAL PROVISIONS FOR LICENSED 24-HOUR CARE FACILITIES IN A GROUP R-3.1

R325.1 Scope. The provisions of this section shall apply to 24-hour care facilities in a Group R-3.1 occupancy licensed by a governmental agency.

R325.2 General. The provisions in this section shall apply in addition to general requirements in this code.

R325.2.1 Restraint shall not be practiced in a Group R-3.1 occupancy.

***Exception:** Occupancies which meet all the requirements for a Group I-3 occupancy.*

R325.2.2 Pursuant to Health and Safety Code Section 13133, regulations of the state fire marshal pertaining to Occupancies classified as Residential Facilities (RF) and Residential-care Facilities for the Elderly (RCFE) shall apply uniformly throughout the state and no city, county, city and county, including a charter city or charter county, or fire protection district shall adopt or enforce any ordinance or local rule or regulation relating to fire and panic safety which is inconsistent with these regulations. A city, county, city and county, including a charter city or charter county may pursuant to Health and Safety Code Section 13143.5, or a fire protection district may pursuant to Health and Safety Code Section 13869.7, adopt standards more stringent than those adopted by the state fire marshal that are reasonably necessary to accommodate local climate, geological, or topographical conditions relating to roof coverings for Residential-care Facilities for the Elderly.

***Exception:** Local regulations relating to roof coverings in facilities licensed as a Residential Care Facility for the Elderly (RCFE) per Health and Safety Code Section 13133.*

R325.3 Building height and area provisions.

***R325.3.1 Limitations six or less clients.** Group R-3.1 occupancies where nonambulatory clients are housed above the first story, having more than two stories in height or having more than 3,000 square feet (279 m^2) of floor area above the first story shall not be of less than one-hour fire-resistance-rated construction throughout.*

In Group R-3.1 occupancies housing a bedridden client, the client sleeping room shall not be located above or below the first story.

***Exception:** Clients who become bedridden as a result of a temporary illness as defined in Health and Safety Code Sections 1566.45, 1568.0832 and 1569.72. A temporary illness is an illness which persists for 14 days or less. A bedridden client may be retained in excess of the 14 days upon approval by the Department of Social Services and may continue to be housed on any story in a Group R-3.1 occupancy classified as a licensed residential facility.*

Every licensee admitting or retaining a bedridden resident shall, within 48 hours of the resident's admission or retention in the facility, notify the local fire authority with jurisdiction of the estimated length of time the resident will retain his or her bedridden status in the facility.

***R325.3.2.** Buildings housing protective social- care homes or in occupancies housing inmates who are not restrained need not be of one-hour fire-resistive construction when not more than two stories in height. In no case shall individual floor areas exceed 3,000 square feet (279 m^2). The fire-resistive protection of the exterior walls shall not be less than one hour where such walls are located within 5 feet (1524 mm) of the property line. Openings within such walls are not permitted. Openings in exterior nonrated walls need not be protected.*

R325.4 Interior finish provisions.

***R325.4.1 Interior wall and ceiling finish.** Group R-3.1 occupancies housing a bedridden client shall comply with Interior Wall and Ceiling Finish requirements specified for Group I-2 occupancies in Table 803.5 of the California Building Code.*

R325.5 Fire protection system provisions.

***R325.5.1 Automatic sprinkler systems in Group R-3.1 occupancies.** An automatic sprinkler system shall be installed where required in Section 313.*

Exceptions:

1. *Existing Group R-3 occupancies converted to Group R-3.1 occupancies not housing bedridden clients, not housing nonambulatory clients above the first floor, and not housing clients above the second floor.*
2. *Existing Group R-3 occupancies converted to Group R-3.1 occupancies housing only one bedridden client and complying with Section R325.6.3.3.*
3. *Pursuant to Health and Safety Code Section 13113 existing occupancies housing ambulatory children only, none of whom are mentally ill or mentally retarded, and the buildings or portions thereof in which such children are housed are not more than two stories in height, and buildings or portions thereof housing such children have an automatic fire alarm system activated by approved smoke detectors.*
4. *Pursuant to Health and Safety Code Section 13143.6 existing occupancies licensed for protective social care which house ambulatory clients only, none of whom is a child (under the age of 18 years), or who is elderly (65 years of age or over).*

***R325.5.2 Smoke alarms in Groups R-3.1 occupancies.** Smoke alarms shall be installed where required in Section 314. In addition to the provisions set forth in Section R314 the following shall apply:*

1. *Smoke alarms shall be provided throughout the habitable areas of the dwelling unit except kitchens.*
2. *Facilities housing a bedridden client:*

   2.1. Smoke alarms shall receive their primary power from the building wiring when such wiring is

served from a commercial source and shall be equipped with a battery backup.

2.2. *Smoke alarms shall be electrically interconnected so as to cause all smoke alarms to sound a distinctive alarm signal upon actuation of any single smoke alarm. Such alarm signal shall be audible throughout the facility at a minimal level of 15 db above ambient noise level. These devices need not be interconnected to any other fire alarm device, have a control panel, or be electrically supervised or provided with emergency power.*

R325.5.2.1 Audible alarm signal. *The audible signal shall be the standard fire alarm evacuation signal, ANSI S3.41 Audible Emergency Evacuation Signal, "three pulse temporal pattern," as described in NFPA 72.*

R325.5.2.2 Hearing impaired. *See Section 907.5.2.3 of the California Building Code.*

R325.5.2.3 Visible alarms. *Visible alarm notification appliances shall be provided in accordance with Sections 907.5.2.3.1 through 907.5.2.3.5 of the California Building Codes.*

Exceptions:

1. *Visible alarm notification appliances are not required in alterations, except where an existing fire alarm system is upgraded or replaced, or a new fire alarm system is installed.*
2. *Visible alarm notification appliances shall not be required in enclosed exit stairways, exterior exit stairs, and exterior exit ramps.*
3. *Visible alarm notification appliances shall not be required in elevator cars.*

R325.5.2.4 Group R-3.1. *Protective social care facilities which house persons who are hearing impaired, shall be provided with notification appliances for the hearing impaired installed in accordance with NFPA 72 and which shall activated upon initiation of the fire alarm system or the smoke alarms.*

Exception: *The use of the existing evacuation signaling scheme shall be permitted where approved by the enforcing agency.*

R325.6 Means of egress provisions.

R325.6.1 General. *In addition to the general means of egress requirements of Chapter 10 of the California Building Code, this section shall apply to Group R-3.1 occupancies.*

R325.6.2 Number of exits.

R325.6.2.1 *Group R-3.1 occupancies shall have a minimum of two exits.*

R325.6.3 Egress arrangements.

R325.6.3.1 *Egress through adjoining dwelling units shall not be permitted.*

R325.6.3.2 Group R-3.1 occupancies housing nonambulatory clients. *In a Group R-3.1 occupancy, bedrooms used by nonambulatory clients shall have access to at least one of the required exits which shall conform to one of the following:*

1. *Egress through a hallway or area into a bedroom in the immediate area which has an exit directly to the exterior and the corridor/hallway is constructed consistent with the dwelling unit interior walls. The hallway shall be separated from common areas by a solid wood door not less than $1^3/_8$ inch (35 mm) in thickness, maintained self-closing or shall be automatic closing by actuation of a smoke detector installed in accordance with Section 715.4.7 of the California Building Code.*
2. *Egress through a hallway which has an exit directly to the exterior. The hallway shall be separated from the rest of the house by a wall constructed consistent with the dwelling unit interior walls and opening protected by a solid wood door not less than $1^3/_8$ inch (35 mm) in thickness, maintained self-closing or shall be automatic closing by actuation of a smoke detector installed in accordance with Section 715.4.7 of the California Building Code.*
3. *Direct exit from the bedroom to the exterior, such doors shall be of a size as to permit the installation of a door not less than 3 feet (914 mm) in width and not less than 6 feet 8 inches (2032 mm) in height. When installed, doors shall be capable of opening at least 90 degrees and shall be so mounted that the clear width of the exit way is not less than 32 inches (813 mm).*
4. *Egress through an adjoining bedroom which exits to the exterior.*

R325.6.3.3 Group R-3.1 occupancies housing only one bedridden clients. *In Group R-3.1 occupancies housing a bedridden client and not provided with an approved automatic fire sprinkler system, all of the following shall apply:*

1. *In Group R-3.1 Occupancies housing a bedridden client, a direct exit to the exterior of the residence shall be provided from the client sleeping room.*
2. *Doors to a bedridden client's sleeping room shall be of a self-closing, positive latching $1^3/_8$ inch solid wood door. Such doors shall be provided with a gasket so installed as to provide a seal where the door meets the jam on both sides and across the top. Doors shall be maintained self-closing or shall be automatic closing by actuation of a smoke detector in accordance with Section 715.4.7 of the California Building Code.*
3. *Group R-3.1 Occupancies housing a bedridden client, shall not have a night latch, dead bolt, security chain or any similar locking device installed on any interior door leading from a bed-*

ridden client's sleeping room to any interior area such as a corridor, hallway and or general use areas of the residence in accordance with Chapter 10 of the California Building Code.

4. *The exterior exit door to a bedridden client's sleeping room shall be operable from both the interior and exterior of the residence.*
5. *Every required exit doorway from a bedridden client sleeping room shall be of a size as to permit the installation of a door not less than 3 feet (914 mm) in width and not less than 6 feet 8 inches (2032 mm) in height. When installed in exit doorways, exit doors shall be capable of opening at least 90 degrees and shall be so mounted that the clear width of the exit way is not less than 32 inches (813 mm).*

Note: A sliding glass door can be used as an exterior exit doorway as long as it is operable from the inside and outside and the clear width of the exit way is not less than 32 inches (813 mm).

R325.6.3.4 Intervening rooms. *A means of exit shall not pass through more than one intervening room. A means of egress shall not pass through kitchens, storerooms, closets, garages or spaces used for similar purposes.*

Exception: *Kitchens which do not form separate rooms by construction.*

R325.6.4 Changes in level. *In Group R-3.1 occupancies housing nonambulatory clients interior changes in level up to 0.25 inch (6 mm) may be vertical and without edge treatment. Changes in level between 0.25 inch (6 mm) and 0.5 inch (12.7 mm) shall be beveled with a slope no greater than 1 unit vertical in 2 units horizontal (50% slope). Changes in level greater than 0.5 inch (12.7 mm) shall be accomplished by means of a ramp.*

R325.6.5 Stairways. *Group R-3.1 occupancies may continue to use existing stairways (except for winding and spiral stairways which are not permitted as a required means of egress) provided the stairs have a maximum rise of 8 inches (203 mm) with a minimum run of 9 inches (229 mm). The minimum stairway width may be 30 inches (762 mm).*

R325.6.6 Floor separation. *Group R-3.1 occupancies shall be provided with a non-fire resistance constructed floor separation at stairs which will prevent smoke migration between floors. Such floor separation shall have equivalent construction of 0.5 inch (12.7 mm) gypsum wallboard on one side of wall framing.*

Exceptions:

1. *Occupancies with at least one exterior exit from floors occupied by clients.*
2. *Occupancies provided with automatic fire sprinkler systems complying with chapter 9.*

R325.6.6.1 Doors within floor separations. *Doors within such floor separations shall be tight fitting solid wood at least $1^3/_8$ inches (35 mm) in thickness. Door glazing shall not exceed 1296 square inches (32 918 mm^2) with no dimension greater than 54 inches (1372 mm). Such doors shall be positive latching, smoke gasketed and shall be automatic-closing by smoke detection.*

R325.6.7 Fences and gates. *Grounds of a Residential Care for the Elderly facility serving Alzheimer clients may be fenced and gates therein equipped with locks, provided safe dispersal areas are located not less than 50 feet (15 240 mm) from the buildings. Dispersal areas shall be sized to provide an area of not less than 3 square feet (0.28 m^2) per occupant. Gates shall not be installed across corridors or passageways leading to such dispersal areas unless they comply with egress requirements.*

R325.6.8 Basement exits. *One exit is required to grade level when the basement is accessible to clients.*

R325.6.9 Delayed egress locks. *See Section 1008.1.8.6 of the California Building Code.*

R325.7 *Request for alternate means of protection for facilities housing bedridden clients. Request for alternate means of protection shall apply to Sections R325 through R325.7. Request for approval to use an alternative material, assembly or materials, equipment, method of construction, method of installation of equipment, or means of protection shall be made in writing to the local fire authority having jurisdiction by the facility, client or the client's authorized representative. Sufficient evidence shall be submitted to substantiate the need for an alternate means of protection.*

The facility, client or the client's representative or the local fire authority having jurisdiction may request a written opinion from the State Fire Marshal concerning the interpretation of the regulations promulgated by the State Fire Marshal for a particular factual dispute. The State Fire Marshal shall issue the written opinion within 45 days following the request.

Approval of a request for use of an alternative material, assembly or materials, equipment, method of construction, method of installation of equipment, or means of protection made pursuant to this section shall be limited to Group R-3.1 occupancies housing a bedridden client.

Approvals made by the local fire authority having jurisdiction and the written opinion by the State Fire Marshal shall be applicable only to the requesting facility and shall not be construed as establishing any precedent for any future request by that facility or any other facility.

R325.8 Temporarily bedridden clients. *Clients who become temporarily bedridden as defined in Health and Safety Code Section 1569.72, as enforced by the Department of Social Services, may continue to be housed on any story in Group R-3.1 occupancies classified as Residential Care Facilities for the Elderly (RCFE). Every Residential Care Facility for the Elderly (RCFE) admitting or retaining a bedridden resident shall, within 48 hours of the resident's admission or retention in the facility, notify the local fire authority with jurisdiction of the estimated length of time the resident will retain his or her bedridden status in the facility.*

R325.9 Group R. Buildings housing protective social-care homes or in occupancies housing inmates who are not restrained need not be of one-hour fire-resistive construction when not more than two stories in height. In no case shall individual floor areas exceed 3,000 square feet (279 m^2). The fire-resistive protection of the exterior walls shall not be less than one hour where such walls are located within 5 feet (1524 mm) of the property line. Openings within such walls are not permitted. Openings in exterior nonrated walls need not be protected.

SECTION R326
LARGE FAMILY DAY-CARE HOMES

R326.1 Large family day-care homes.

R326.2 For purposes of clarification, Health and Safety Code Section 1597.46 is repeated.

a. A city, county, or city and county shall not prohibit large family day-care homes on lots zoned for single-family dwellings, but shall do one of the following:

1. Classify these homes as a permitted use of residential property for zoning purposes.

2. Grant a nondiscretionary permit to use a lot zoned for a single-family dwelling to any large family day care home that complies with local ordinances prescribing reasonable standards, restrictions, and requirements concerning spacing and concentration, traffic control, parking, and noise control relating to such homes, and complies with subdivision (d) and any regulations adopted by the State Fire Marshal pursuant to that subdivision. Any noise standards shall be consistent with local noise ordinances implementing the noise element of the general plan and shall take into consideration the noise level generated by children. The permit issued pursuant to this paragraph shall be granted by the zoning administrator, if any, or if there is no zoning administrator by the person or persons designated by the planning agency to grant such permits, upon the certification without a hearing.

3. Require any large family day-care home to apply for a permit to use a lot zoned for single-family dwellings. The zoning administrator, if any, or if there is no zoning administrator, the person or persons designated by the planning agency to handle the use permits shall review and decide the applications. The use permit shall be granted if the large family day-care home complies with local ordinances, if any, prescribing reasonable standards, restrictions, and requirements concerning spacing and concentration, traffic control, parking, and noise control relating to such homes, and complies with subdivision (d) and any regulations adopted by the State Fire Marshal pursuant to that subdivision.

Any noise standards shall be consistent with local noise ordinances implementing the noise element of the general plan and shall take into consideration the noise levels generated by children.

The local government shall process any required permit as economically as possible, and fees charged for review shall not exceed the costs of the review and permit process. Not less than 10 days prior to the date on which the decision will be made on the application, the zoning administrator or person designated to handle such use permits shall give notice of the proposed use by mail or delivery to all owners shown on the last equalized assessment roll as owning real property within a 100 foot radius of the exterior boundaries of the proposed large family day care home. No hearing on the application for a permit issued pursuant to this paragraph shall be held before a decision is made unless a hearing is requested by the applicant or other affected person. The applicant or other affected person may appeal the decision. The appellant shall pay the cost, if any of the appeal.

b. A large family day-care home shall not be subject to the provisions of Division 13 (commencing with Section 21000) of the Public Resources Code.

c. Use of a single-family dwelling for the purposes of a large family day-care home shall not constitute a change of occupancy for purposes of Part 1.5 (commencing with Section 17910) of Division 13 (State Housing Law), or for purposes of local building and fire codes.

d. Large family day-care homes shall be considered as single-family residences for the purposes of the State Uniform Building Standards Code and local building and fire codes, except with respect to any additional standards specifically designed to promote the fire and life safety of the children in these homes adopted by the State Fire Marshal pursuant to this subdivision.

***R326.3 Smoke alarms.** Large family day-care homes shall be equipped with State Fire Marshal approved and listed single station residential type smoke alarms. The number and placement of smoke alarms shall be determined by the enforcement authority.*

***R326.4 Fire extinguishers.** Large and small family day-care homes shall be equipped with a portable fire extinguisher having a minimum 2A10BC rating.*

***R326.5 Fire alarm devices.** Every large family day-care home shall be provided with at least one manual device at a location approved by the authority having jurisdiction. Such device shall actuate a fire alarm signal, which shall be audible throughout the facility at a minimum level of 15 db above ambient noise level. These devices need not be interconnected to any other fire alarm device, have a control panel or be electrically supervised or provided with emergency power. Such device or devices shall be attached to the structure and may be of any type acceptable to the enforcing agent, provided that such devices are distinctive in tone and are audible throughout the structure.*

***R326.6 Compliance.** Every large family day-care home shall comply with the provisions for Group R-3 occupancies and, if appropriate, Section 326.1. For the purposes of Section*

326.1, the first story shall be designated as the floor used for residential occupancy nearest to the street level which provides primary access to the building.

Enforcement of the provisions shall be in accordance with the Health and Safety Code Sections 13145 and 13146. No city, county, city and county, or district shall adopt or enforce any building ordinance or local rule or regulation relating to the subject of fire and life safety in large-family day-care homes which is inconsistent with those standards adopted by the State Fire Marshal, except to the extent the building ordinance or local rule or regulation applies to single-family residences in which day care is not provided.

R326.7 Special hazards. *Every unenclosed gas-fired water heater or furnace which is within the area used for child care in a large family day-care home shall be protected in such a way as to prevent children from making contact with those appliances.*

Exception: *This does not apply to kitchen stoves or ovens.*

R326.8 Exiting. *Every story or basement of a large family day-care home shall be provided with two exits which are remotely located from each other. Every required exit shall be of a size to permit the installation of a door not less than 32 inches (813mm) in clear width and not less than 6 feet 8 inches (2032 mm) in height. A manually operated horizontal sliding door may be used as one of the two required exits.*

Where basements are used for day-care purposes, one of the two required exits shall provide access directly to the exterior without entering the first story. The second exit from the basement may either pass through the story above or exit directly to the exterior.

Rooms used for day-care purposes shall not be located above the first story.

Exception: *Buildings equipped with an automatic sprinkler system throughout and which have at least one of the required exits providing access directly to the exterior. NFPA 13R may be used in large family day-care homes. The sprinkler omissions of NFPA 13R shall not apply unless approved by the enforcing agency.*

Exit doors, including manually operated horizontal sliding doors, shall be openable from the inside without use of a key or any special knowledge or effort.

SECTION R327
MATERIALS AND CONSTRUCTION METHODS FOR EXTERIOR WILDFIRE EXPOSURE

SECTION R327.1
SCOPE, PURPOSE AND APPLICATION

R327.1.1 Scope. *This chapter applies to building materials, systems and or assemblies used in the exterior design and construction of new buildings located within a Wildland-Urban Interface Fire Area as defined in Section R327.2A.*

R327.1.2 Purpose. *The purpose of this chapter is to establish minimum standards for the protection of life and property by increasing the ability of a building located in any Fire Hazard Severity Zone within State Responsibility Areas or any Wildland-Urban Interface Fire Area to resist the intrusion of flame or burning embers projected by a vegetation fire and contributes to a systematic reduction in conflagration losses.*

R327.1.3 Application. *New buildings located in any Fire Hazard Severity Zone or any Wildland-Urban Interface Fire Area designated by the enforcing agency constructed after the application date shall comply with the provisions of this chapter.*

Exceptions:

1. *Buildings of an accessory character classified as a Group U occupancy and not exceeding 120 square feet in floor area, when located at least 30 feet from an applicable building.*
2. *Buildings of an accessory character classified as Group U occupancy of any size located least 50 feet from an applicable building.*
3. *Buildings classified as a Group U Agricultural Building, as defined in Section 202 of this code (see also Appendix C – Group U Agricultural Buildings), when located at least 50 feet from an applicable building.*
4. *Additions to and remodels of buildings originally constructed prior to the applicable application date.*

R327.1.3.1 Application date and where required. *New buildings for which an application for a building permit is submitted on or after July 1, 2008 located in any Fire Hazard Severity Zone or Wildland Interface Fire Area shall comply with all sections of this chapter, including all of the following areas:*

1. *All unincorporated lands designated by the State Board of Forestry and Fire Protection as State Responsibility Area (SRA) including:*
   - *1.1. Moderate Fire Hazard Severity Zones*
   - *1.2. High Fire Hazard Severity Zones*
   - *1.3. Very-High Fire Hazard Severity Zones*
2. *Land designated as Very-High Fire Hazard Severity Zone by cities and other local agencies.*
3. *Land designated as Wildland Interface Fire Area by cities and other local agencies.*

Exceptions:

1. *New buildings located in any Fire Hazard Severity Zone within State Responsibility Areas, for which an application for a building permit is submitted on or after January 1, 2008, shall comply with all sections of this chapter.*

2. *New buildings located in any Fire Hazard Severity Zone within State Responsibility Areas or any Wildland Interface Fire Area designated by cities and other local agencies for which an application for a building permit is submitted on or after December 1, 2005 but prior to July 1, 2008, shall only comply with the following sections of this chapter:*

   2.1. Section R327.5 – Roofing

   2.2. Section R327.6 – Vents

R327.1.4 Inspection and certification. *Building permit applications and final completion approvals for buildings within the scope and application of this chapter shall comply with the following:*

1. *Building permit issuance. The local building official shall, prior to construction, provide the owner or applicant a certification that the building as proposed to be built complies with all applicable state and local building standards, including those for materials and construction methods for wildfire exposure as described in this chapter. Issuance of a building permit by the local building official for the proposed building shall be considered as complying with this section.*

2. *Building permit final. The local building official shall, upon completion of construction, provide the owner or applicant with a copy of the final inspection report that demonstrates the building was constructed in compliance with all applicable state and local building standards, including those for materials and construction methods for wildfire exposure as described in this chapter. Issuance of a certificate of occupancy by the local building official for the proposed building shall be considered as complying with this section.*

R327.1.5 Vegetation management compliance. *Prior to building permit final approval, the property shall be in compliance with the vegetation management requirements prescribed in California Fire Code Section 4906, including California Public Resources Code 4291 or California Government Code Section 51182. Acceptable methods of compliance inspection and documentation shall be determined by the enforcing agency and may include any of the following:*

1. *Local, state, or federal fire authority or designee authorized to enforce vegetation management requirements.*

2. *Enforcing agency.*

3. *Third party inspection and certification authorized to enforce vegetation management requirements.*

4. *Property owner certification authorized by the enforcing agency.*

SECTION R327.2 DEFINITIONS

For the purposes of this chapter, certain terms are defined below:

CDF DIRECTOR *means the Director of the California Department of Forestry and Fire Protection.*

EXTERIOR COVERING. *The exposed siding or cladding material applied to the exterior side of an exterior wall, roof eave soffit, floor projection or exposed underfloor framing.*

FIRE PROTECTION PLAN *is a document prepared for a specific project or development proposed for a Wildland-Urban Interface Fire Area. It describes ways to minimize and mitigate potential for loss from wildfire exposure. The fire protection plan shall be in accordance with this chapter and the California Fire Code, Chapter 49. When required by the enforcing agency for the purposes of granting modifications, a fire protection plan shall be submitted. Only locally adopted ordinances that have been filed with the California Building Standards Commission or the Department of Housing and Community Development in accordance with Section 1.1.8 shall apply.*

FIRE HAZARD SEVERITY ZONES *are geographical areas designated pursuant to California Public Resources Codes Sections 4201 through 4204 and classified as Very-High, High, or Moderate in State Responsibility Areas or as Local Agency Very-High Fire Hazard Severity Zones designated pursuant to California Government Code Sections 51175 through 51189. See California Fire Code Article 86.*

The California Code of Regulations, Title 14, Section 1280 entitles the maps of these geographical areas as "Maps of the Fire Hazard Severity Zones in the State Responsibility Area of California."

HEAVY TIMBER. *A type of construction classification specified in Section 602. For use in this chapter, heavy timber shall be sawn lumber or glue laminated wood with the smallest minimum nominal dimension of 4 inches (102 mm). Heavy timber walls or floors shall be sawn or glue-laminated planks splined, tongue-and-grove, or set close together and well spiked.*

IGNITION-RESISTANT MATERIAL. *A type of building material that resists ignition or sustained flaming combustion sufficiently so as to reduce losses from wildland-urban interface conflagrations under worst-case weather and fuel conditions with wildfire exposure of burning embers and small flames, as prescribed in Section 703A and SFM Standard 12-7A-5, Ignition-Resistant Material.*

LOCAL AGENCY VERY-HIGH FIRE HAZARD SEVERITY ZONE *means an area designated by a local agency upon the recommendation of the CDF Director pursuant to Government Code Sections 51177(c), 51178 and 5118 that is not a state responsibility area and where a local agency, city, county, city and county, or district is responsible for fire protection.*

LOG WALL CONSTRUCTION. *A type of construction in which exterior walls are constructed of solid wood members and where the smallest horizontal dimension of each solid wood member is at least 6 inches (152 mm).*

RAFTER TAIL. *The portion of roof rafter framing in a sloping roof assembly that projects beyond and overhangs an exterior wall.*

ROOF EAVE. *The lower portion of a sloping roof assembly that projects beyond and overhangs an exterior wall at the lower end of the rafter tails. Roof eaves may be either "open" or "enclosed." Open roof eaves have exposed rafter tails and an unenclosed space on the underside of the roof deck. Enclosed roof eaves have a boxed-in roof eave soffit with a horizontal underside or sloping rafter tails with an exterior covering applied to the underside of the rafter tails.*

ROOF EAVE SOFFIT. *An enclosed boxed-in soffit under a roof eave with exterior covering material applied to the soffit framing creating a horizontal surface on the exposed underside.*

STATE RESPONSIBILITY AREA *means lands that are classified by the Board of Forestry pursuant to Public Resources Code Section 4125 where the financial responsibility of preventing and suppressing forest fires is primarily the responsibility of the state.*

WILDFIRE *is any uncontrolled fire spreading through vegetative fuels that threatens to destroy life, property or resources as defined in Public Resources Code Sections 4103 and 4104.*

WILDFIRE EXPOSURE *is one or a combination of radiant heat, convective heat, direct flame contact and burning embers being projected by vegetation fire to a structure and its immediate environment.*

WILDLAND-URBAN INTERFACE FIRE AREA *is a geographical area identified by the state as a "Fire Hazard Severity Zone" in accordance with the Public Resources Code Sections 4201 through 4204 and Government Code Sections 51175 through 51189, or other areas designated by the enforcing agency to be at a significant risk from wildfires.*

SECTION R327.3 STANDARDS OF QUALITY

R327.3.1 General. *Building material, systems, assemblies and methods of construction used in this chapter shall be in accordance with Section R327.3.*

R327.3.2 Qualification by testing. *Material and material assemblies tested in accordance with the requirements of Section 703A shall be accepted for use when the results and conditions of those tests are met. Product evaluation testing of material and material assemblies shall be approved or listed by the State Fire Marshal, or identified in a current report issued by an approved agency.*

R327.3.3 Approved agency. *Product evaluation testing shall be performed by an approved agency as defined in Section 1702. The scope of accreditation for the approved agency shall include building product compliance with code.*

R327.3.4 Labeling. *Material and material assemblies tested in accordance with the requirements of section R327.3 shall bear an identification label showing the fire test results. That identification label shall be issued by a testing and/or inspecting agency approved by the State Fire Marshal.*

1. *Identification mark of the approved testing and/or inspecting agency.*
2. *Contact and identification information of the manufacturer.*
3. *Model number or identification of the product or material.*
4. *Pre-test weathering specified in this chapter.*
5. *Compliance standard as described under Section R327.3.7.*

R327.3.5 Weathering and surface treatment protection.

R327.3.5.1 General. *Material and material assemblies tested in accordance with the requirements of Section 703A shall maintain their fire test performance under conditions of use when installed in accordance with the manufacturers instructions.*

R327.3.5.2 Weathering. *Fire-retardant-treated wood and fire-retardant-treated wood shingles and shakes shall meet the fire test performance requirements of this chapter after being subjected to the weathering conditions contained in the following standards, as applicable to the materials and the conditions of use.*

R327.3.5.2.1 Fire-retardant-treated wood. *Fire-retardant-treated wood shall be tested in accordance with ASTM D 2898, "Standard Practice for Accelerated Weathering of Fire-Retardant Treated Wood for Fire Testing (Method A)" and the requirements of Section 2303.2.*

R327.3.5.2.2 Fire-retardant-treated wood shingles and shakes. *Fire-retardant-treated wood shingles and shakes shall be approved and listed by the State Fire Marshal in accordance with Section 208(c), Title 19 California Code of Regulations.*

R327.3.5.3 Surface treatment protection. *The use of paints, coatings, stains, or other surface treatments are not an approved method of protection as required in this section.*

R327.3.6 Alternates for materials, design, tests and methods of construction. *The enforcing agency is permitted to modify the provisions of this chapter for site-specific conditions in accordance with Section 1.11.2.4. When required by the enforcing agency for the purposes of granting modifications, a fire protection plan shall be submitted in accordance with the California Fire Code, Chapter 49.*

R327.3.7 Standards of quality. *The State Fire Marshal standards for exterior wildfire exposure protection listed below and as referenced in this chapter are located in the California Referenced Standards Code, Part 12 and Chapter 35 of this code.*

SFM Standard 12-7A-1, *Exterior Wall Siding and Sheathing. A fire resistance test standard consisting*

of a 150 kW intensity direct flame exposure for a 10 minutes duration.

SFM Standard 12-7A-2, *Exterior Windows. A fire resistance test standard consisting of a 150 kW intensity direct flame exposure for a 8 minutes duration.*

SFM Standard 12-7A-3, *Horizontal Projection Underside A fire resistance test standard consisting of a 300 kW intensity direct flame exposure for a 10 minute duration.*

SFM Standard 12-7A- 4, *Decking. A two-part test consisting of a heat release rate (Part A) deck assembly combustion test with an under deck exposure of 80 kW intensity direct flame for a 3 minute duration, and a (Part B) sustained deck assembly combustion test consisting of a deck upper surface burning ember exposure with a 12 mph wind for 40 minutes using a 2.2 lb (1 kg) burning "Class A" size 12" × 12" × 2.25" (300 mm x 300 mm x 57 mm) roof test brand.*

SFM Standard 12-7A-4A, *Decking Alternate Method A. A heat release rate deck assembly combustion test with an under deck exposure of 80 kW intensity direct flame for a 3 minute duration.*

SFM Standard 12-7A-5, *Ignition-Resistant Material. A generic building material surface burning flame spread test standard consisting of an extended 30 minute ASTM E84 or UL 723 test method as is used for Fire-Retardant-Treated wood.*

SECTION R327.4
IGNITION RESISTANT CONSTRUCTION

R327.4.1 General. *The materials prescribed herein for ignition resistance shall conform to the requirements of this chapter.*

R327.4.2 Ignition-resistant material. *Ignition-resistant material shall be determined in accordance with the test procedures set forth in SFM Standard 12-7A-5 "Ignition-Resistant Material" or in accordance with this section.*

R327.4.3 Alternative methods for determining Ignition-resistant material. *Any one of the following shall be accepted as meeting the definition of ignition-resistant material:*

1. *Noncombustible material. Material that complies with the definition for noncombustible materials in Section 202*
2. *Fire-retardant-treated wood. Fire-retardant-treated wood identified for exterior use that complies with the requirements of Section 2303.2 of the California Building Code.*
3. *Fire-retardant-treated wood shingles and shakes. Fire-retardant-treated wood shingles and shakes, as defined in Section 1505.6 of the California Building Code and listed by State Fire Marshal for use as "Class B" roof covering, shall be accepted as an Ignition-resistant wall covering material when installed over solid sheathing.*

SECTION R327.5
ROOFING

R327.5.1 General. *Roofs shall comply with the requirements of Sections R327 and R902. Roofs shall have a roofing assembly installed in accordance with its listing and the manufacturer's installation instructions.*

R327.5.2 Roof coverings. *Where the roof profile allows a space between the roof covering and roof decking, the spaces shall be constructed to prevent the intrusion of flames and embers, be firestopped with approved materials or have one layer of minimum 72 pound (32.4 kg) mineral-surfaced nonperforated cap sheet complying with ASTM D 3909 installed over the combustible decking.*

R327.5.3 Roof valleys. *Where valley flashing is installed, the flashing shall be not less than 0.019-inch (0.48 mm) No. 26 gage galvanized sheet corrosion-resistant metal installed over not less than one layer of minimum 72-pound (32.4 kg) mineral-surfaced nonperforated cap sheet complying with ASTM D 3909, at least 36-inch-wide (914 mm) running the full length of the valley.*

R327.5.4 Roof gutters. *Roof gutters shall be provided with the means to prevent the accumulation of leaves and debris in the gutter.*

SECTION R327.6
VENTS

R327.6.1 General. *Where provided, ventilation openings for enclosed attics, enclosed eave soffit spaces, enclosed rafter spaces formed where ceilings are applied directly to the underside of roof rafters, and underfloor ventilation shall be in accordance with Section 1203 of the California Building Code and Sections R327.6.1 through R327.6.3 of this section to resist building ignition from the intrusion of burning embers and flame through the ventilation opening.*

R327.6.2 Requirements. *Ventilation openings for enclosed attics, enclosed eave soffit spaces, enclosed rafter spaces formed where ceilings are applied directly to the underside of roof rafters, and underfloor ventilation openings shall be fully covered with metal wire mesh, vents, other materials, or other devices that meet the following requirements:*

1. *The dimensions of the openings therein shall be a minimum of $^1/_{16}$ inch (1.6 mm) and shall not exceed $^1/_8$ inch (3.2 mm).*
2. *The materials used shall be noncombustible.*

   Exception: *Vents located under the roof covering, along the ridge of roofs, with the exposed surface of the vent covered by noncombustible wire mesh, may be of combustible materials.*
3. *The materials used shall be corrosion resistant.*

R327.6.3 Ventilation openings on the underside of eaves and cornices. *Vents shall not be installed on the underside of eaves and cornices.*

Exceptions:

1. *The enforcing agency may accept or approve special eave and cornice vents that resist the intrusion of flame and burning embers.*
2. *Vents complying with the requirements of Section R327.6.2 may be installed on the underside of eaves and cornices in accordance with either one of the following conditions:*
   - 2.1. *The attic space being ventilated is fully protected by an automatic sprinkler system installed in accordance with Section 903.3.1.1 of the California Building Code or,*
   - 2.2. *The exterior wall covering and exposed underside of the eave are of noncombustible material, or ignition-resistant-materials as determined in accordance with SFM Standard 12-7A-5 Ignition-Resistant Material and the vent is located more than 12 feet from the ground or walking surface of a deck, porch, patio, or similar surface.*

SECTION R327.7
EXTERIOR COVERING

R327.7.1 Scope. *The provisions of this section shall govern the materials and construction methods used to resist building ignition and/or safeguard against the intrusion of flames resulting from small ember and short-term direct flame contact exposure.*

R327.7.2 General. *The following exterior covering materials and/or assemblies shall comply with this section:*

1. *Exterior wall covering material.*
2. *Exterior wall assembly.*
3. *Exterior exposed underside of roof eave overhangs,*
4. *Exterior exposed underside of roof eave soffits.*
5. *Exposed underside of exterior porch ceilings.*
6. *Exterior exposed underside of floor projections.*
7. *Exterior underfloor areas.*

Exceptions:

1. *Exterior wall architectural trim, embellishments, fascias and gutters.*
2. *Roof or wall top cornice projections and similar assemblies.*
3. *Roof assembly projections over gable end walls..*
4. *Solid wood rafter tails and solid wood blocking installed between rafters having minimum dimension 2 inch (50.8 mm) nominal.*
5. *Deck walking surfaces shall comply with Section R327.9 only.*

R327.7.3 Exterior walls. *The exterior wall covering or wall assembly shall comply with one of the following requirements:*

1. *Noncombustible material.*
2. *Ignition-Resistant material.*
3. *Heavy timber exterior wall assembly.*
4. *Log wall construction assembly.*
5. *Wall assemblies that meet the performance criteria in accordance with the test procedures for a 10-minute direct flame contact exposure test set forth in SFM Standard 12-7A-1.*

Exception: *Any of the following shall be deemed to meet the assembly performance criteria and intent of this section:*

1. *One layer of $^5/_8$-inch Type X gypsum sheathing applied behind the exterior covering or cladding on the exterior side of the framing.*
2. *The exterior portion of a 1-hour fire resistive exterior wall assembly designed for exterior fire exposure including assemblies using the gypsum panel and sheathing products listed in the Gypsum Association Fire Resistance Design Manual.*

R327.7.3.1 Extent of exterior wall covering. *Exterior wall coverings shall extend from the top of the foundation to the roof, and terminate at 2 inch (50.8 mm) nominal solid wood blocking between rafters at all roof overhangs, or in the case of enclosed eaves, terminate at the enclosure.*

R327.7.4 Open roof eaves. *The exposed roof deck on the underside of unenclosed roof eaves shall consist of one of the following:*

1. *Noncombustible material.*
2. *Ignition-Resistant material.*
3. *One layer of $^5/_8$-inch Type X gypsum sheathing applied behind an exterior covering on the underside exterior of the roof deck.*
4. *The exterior portion of a 1-hour fire resistive exterior wall assembly applied to the underside of the roof deck designed for exterior fire exposure including assemblies using the gypsum panel and sheathing products listed in the Gypsum Association Fire Resistance Design Manual.*

Exceptions: *The following materials do not require protection:*

1. *Solid wood rafter tails on the exposed underside of open roof eaves having a minimum nominal dimension of 2 inch (50.8 mm).*
2. *Solid wood blocking installed between rafter tails on the exposed underside of open roof eaves having a minimum nominal dimension of 2 inch (50.8 mm).*
3. *Gable end overhangs and roof assembly projections beyond an exterior wall other than at the lower end of the rafter tails.*
4. *Fascia and other architectural trim boards.*

R327.7.5 Enclosed roof eaves and roof eave soffits. *The exposed underside of enclosed roof eaves having either a boxed-in roof eave soffit with a horizontal underside, or sloping rafter tails with an exterior covering applied to the underside of the rafter tails, shall be protected by one of the following:*

1. *Noncombustible material.*
2. *Ignition-Resistant material.*
3. *One layer of $^5/_8$-inch Type X gypsum sheathing applied behind an exterior covering on the underside of the rafter tails or soffit.*
4. *The exterior portion of a 1-hour fire resistive exterior wall assembly applied to the underside of the rafter tails or soffit including assemblies using the gypsum panel and sheathing products listed in the Gypsum Association Fire Resistance Design Manual.*
5. *Boxed-in roof eave soffit assemblies with a horizontal underside that meet the performance criteria in accordance with the test procedures set forth in SFM Standard 12-7A-3.*

Exceptions: *The following materials do not require protection:*

1. *Gable end overhangs and roof assembly projections beyond an exterior wall other than at the lower end of the rafter tails.*
2. *Fascia and other architectural trim boards.*

R327.7.6 Exterior porch ceilings. *The exposed underside of exterior porch ceilings shall be protected by one of the following:*

1. *Noncombustible material.*
2. *Ignition-Resistant material.*
3. *One layer of $^5/_8$-inch Type X gypsum sheathing applied behind the exterior covering on the underside of the ceiling.*
4. *The exterior portion of a 1-hour fire resistive exterior wall assembly applied to the underside of the ceiling assembly including assemblies using the gypsum panel and sheathing products listed in the Gypsum Association Fire Resistance Design Manual.*
5. *Porch ceiling assemblies with a horizontal underside that meet the performance criteria in accordance with the test procedures set forth in SFM Standard 12-7A-3.*

Exception: *Architectural trim boards.*

R327.7.7 Floor projections. *The exposed underside of a cantilevered floor projection where a floor assembly extends over an exterior wall shall be protected by one of the following:*

1. *Noncombustible material.*
2. *Ignition-Resistant material.*
3. *One layer of $^5/_8$-inch Type X gypsum sheathing applied behind an exterior covering on the underside of the floor projection.*
4. *The exterior portion of a 1-hour fire resistive exterior wall assembly applied to the underside of the floor projection including assemblies using the gypsum panel and sheathing products listed in the Gypsum Association Fire Resistance Design Manual.*
5. *The underside of a floor projection assembly that meet the performance criteria in accordance with the test procedures set forth in SFM Standard 12-7A-3.*

Exception: *Architectural trim boards.*

R327.7.8 Underfloor protection. *The underfloor area of elevated or overhanging buildings shall be enclosed to grade in accordance with the requirements of this chapter or the underside of the exposed underfloor shall consist of one of the following:*

1. *Noncombustible material.*
2. *Ignition-Resistant material.*
3. *One layer of $^5/_8$-inch Type X gypsum sheathing applied behind an exterior covering on the underside of the floor projection.*
4. *The exterior portion of a 1-hour fire resistive exterior wall assembly applied to the underside of the floor including assemblies using the gypsum panel and sheathing products listed in the Gypsum Association Fire Resistance Design Manual.*
5. *The underside of a floor assembly that meets the performance criteria in accordance with the test procedures set forth in SFM Standard 12-7A-3.*

Exception: *Heavy-timber structural columns and beams do not require protection.*

R327.7.8 Underside of appendages. *When required by the enforcing agency the underside of overhanging appendages shall be enclosed to grade in accordance with the requirements of this chapter or the underside of the exposed underfloor shall consist of one of the following:*

1. *Noncombustible material.*
2. *Ignition-Resistant material.*
3. *One layer of $^5/_8$-inch Type X gypsum sheathing applied behind an exterior covering on the underside of the floor projection.*
4. *The exterior portion of a 1-hour fire resistive exterior wall assembly applied to the underside of the floor including assemblies using the gypsum panel and sheathing products listed in the Gypsum Association Fire Resistance Design Manual.*
5. *The underside of a floor assembly that meets the performance criteria in accordance with the test procedures set forth in SFM Standard 12-7A-3.*

Exception: *Heavy-timber structural columns and beams do not require protection.*

SECTION R327.8
EXTERIOR WINDOWS AND DOORS

R327.8.1 General.

R327.8.2 Exterior glazing. *The following exterior glazing materials and/or assemblies shall comply with this section:*

1. *Exterior windows.*
2. *Exterior glazed doors.*
3. *Glazed openings within exterior doors.*
4. *Glazed openings within exterior garage doors.*
5. *Exterior structural glass veneer.*

R327.8.2.1 Exterior windows and exterior glazed door assembly requirements. *Exterior windows and exterior glazed door assemblies shall comply with one of the following requirements:*

1. *Be constructed of multipane glazing with a minimum of one tempered pane meeting the requirements of Section 2406 Safety Glazing, or*
2. *Be constructed of glass block units, or*
3. *Have a fire-resistance rating of not less than 20 minutes when tested according to NFPA 257, or*
4. *Be tested to meet the performance requirements of SFM Standard 12-7A-2.*

R327.8.2.2 Structural glass veneer. *The wall assembly behind structural glass veneer shall comply with section R327.7.3.*

R327.8.3 Exterior doors. *Exterior doors shall comply with one of the following:*

1. *The exterior surface or cladding shall be of noncombustible or Ignition-resistant material, or*
2. *Shall be constructed of solid core wood that comply with the following requirements:*
   - 2.1. *Stiles and rails shall not be less than $1^3/_8$ inches thick*
   - 2.2. *Raised panels shall not be less than $1^1/_4$ inches thick, except for the exterior perimeter of the raised panel that may taper to a tongue not less than $^3/_8$ inch thick.*
3. *Shall have a fire-resistance rating of not less than 20 minutes when tested according to NFPA 252.*
4. *Shall be tested to meet the performance requirements of SFM Standard 12-7A-1.*

R327.8.3.1 Exterior door glazing. *Glazing in exterior doors shall comply with Section 708A.2.1.*

SECTION R327.9
DECKING

R327.9.1 General. *The walking surface material of decks, porches, balconies and stairs shall comply with the requirements of this section.*

R327.9.2 Where required. *The walking surface material of decks, porches, balconies and stairs shall comply with the requirements of this section when any portion of such surface is within 10 feet (3048 mm) of the building.*

R327.9.3 Decking surfaces. *The walking surface material of decks, porches, balconies and stairs shall be constructed with one of the following materials:*

1. *Ignition-resistant material that complies with the performance requirements of both SFM Standard 12-7A-4 and SFM Standard 12-7A-5.*
2. *Exterior fire retardant treated wood.*
3. *Noncombustible material.*
4. *Any material that complies with the performance requirements of SFM Standard 12-7A-4A when attached exterior wall covering is also either noncombustible or ignition-resistant material.*

   Exception: *Wall material may be of any material that otherwise complies with this chapter when the decking surface material complies with the performance requirements ASTM E 84 with a Class B flame spread rating.*

SECTION R327.10
ACCESSORY STRUCTURES

R327.10.1 General. *Accessory and miscellaneous structures, other than buildings covered by Section 701A.3, which pose a significant exterior exposure hazard to applicable buildings during wildfires shall be constructed to conform to the ignition resistance requirements of this section.*

R327.10.2 Applicability. *The provisions of this section shall apply to trellises, arbors, patio covers, carports, gazebos, and similar structures of an accessory or miscellaneous character.*

Exceptions:

1. *Decks shall comply with the requirements of Section 709A.*
2. *Awnings and canopies shall comply with the requirements of Section 3105.*

R327.10.3 Where required. *Accessory structures shall comply with the requirements of this section.*

R327.10.3.1 *Attached accessory structures shall comply with the requirements of this section.*

R327.10.3.2 *When required by the enforcing agency, detached accessory structures within 50 feet of an applicable building shall comply with the requirements of this section.*

R327.10.4. Requirements. *When required by the enforcing agency accessory structures shall be constructed of noncombustible or ignition-resistant materials.*

SECTION 328
ELECTRIC VEHICLE

R328.1 Electric vehicle. *An automotive-type vehicle for highway use, such as passenger automobiles, buses, trucks, vans and the like, primarily powered by an electric motor that draws current from a rechargeable storage battery, fuel cell, photovoltaic array or other source of electric current. For the purpose of this chapter, electric motorcycles and similar type vehicles and off-road self-propelled electric vehicles such as industrial trucks, hoists, lifts, transports, golf carts, airline ground support equipment, tractors, boats and the like, are not included*

R328.2 Charging. *In any building or interior area used for charging electric vehicles, electrical equipment shall be installed in accordance with the California Electrical Code.*

R328.3 Ventilation. *Mechanical exhaust ventilation, when required by the California Electrical Code shall be provided at a rate as required by Article 625 or as required by Section 1203 of the California Building Code whichever is greater. The ventilation system shall include both the supply and exhaust equipment and shall be permanently installed and located to intake supply air from the outdoors, and vent the exhaust directly to, the outdoors without conducting the exhaust air through other spaces within the building.*

> ***Exception:*** *Positive pressure ventilation systems shall only be allowed in buildings or areas that have been designed and approved for that application.*

R328.4 Electrical interface. *The electrical supply circuit to electrically powered mechanical ventilation equipment shall be interlocked with the recharging equipment used to supply the vehicle(s) being charged, and shall remain energized during the entire charging cycle. Electric vehicle recharging equipment shall be marked or labeled in accordance with the California Electrical Code.*

Exceptions:

1. *Exhaust ventilation shall not be required in areas with an approved engineered ventilation system, which maintains a hydrogen gas concentration at less than 25 percent of the lower flammability limit.*
2. *Mechanical exhaust ventilation for hydrogen shall not be required where the charging equipment utilized is installed and listed for indoor charging of electric vehicles without ventilation.*

SECTION R330
POLLUTANT CONTROL

R330.1 Finish material pollutant control. *Finish materials including adhesives, sealants, caulks, paints and coatings, aerosol paints and coatings, carpet systems, carpet cushion, carpet adhesive, resilient flooring systems and composite wood products shall meet the volatile organic compound (VOC) emission limits in accordance with the California Green Building Standards Code, Chapter 4, Division 4.5.*

Note:

Authority cited: Health and Safety Code Sections 17040, 17050, 17920.9, 17921, 17921.3, 17921.6, 17921.10, 17922, 17922.6, 17922.12, 17927, 17928, 17959.6, 18300, 18552, 18554, 18620, 18630, 18640, 18670, 18690, 18691, 18865, 18871.3, 18871.4, 18873, 18873.1, 18873.2, 18873.3, 18873.4, 18873.5, 18938.3, 18944.11 and 19990; and Government Code Section 12955.1.

Reference: *Health and Safety Code Sections 17000 through 17062.5, 17910 through 17995.5, 18200 through 18700, 18860 through 18874 and 19960 through 19997; and Government Code Sections 12955.1 and 12955.1.1.*

SECTION R331
SOLAR PHOTOVOLTAIC PANELS/MODULES

R331.1 Solar photovoltaic power systems. *Solar photovoltaic power systems shall be installed in accordance with Sections R331.2 through R331.5 and the California Electrical Code.*

> ***Exception:*** *Detached, nonhabitable Group U structures including, but not limited to, parking shade structures, carports, solar trellises and similar structures shall not be subject to the requirements of this section.*

R331.2 Marking. *Marking is required on interior and exterior direct-current (DC) conduit, enclosures, raceways, cable assemblies, junction boxes, combiner boxes and disconnects.*

> ***R331.2.1 Materials.*** *The materials used for marking shall be reflective, weather resistant and suitable for the environment. Marking as required in Sections R331.2.2 through R331.2.4 shall have all letters capitalized with a minimum height of $^3/_8$ inch (9.5 mm) white on red background.*
>
> ***R331.2.2 Marking content.*** *The marking shall contain the words "WARNING: PHOTOVOLTAIC POWER SOURCE."*
>
> ***R331.2.3 Main service disconnect.*** *The marking shall be placed adjacent to the main service disconnect in a location clearly visible from the location where the disconnect is operated.*
>
> ***R331.2.4 Location of marking.*** *Marking shall be placed on interior and exterior DC conduit, raceways, enclosures and cable assemblies every 10 feet (3048 mm), within 1 foot (305 mm) of turns or bends and within 1 foot (305 mm) above and below penetrations of roof/ceiling assemblies, walls or barriers.*

R331.3 Locations of DC conductors. *Conduit, wiring systems and raceways for photovoltaic circuits shall be located as close as possible to the ridge or hip or valley and from the hip or valley as directly as possible to an outside wall to reduce trip hazards and maximize ventilation opportunities. Conduit runs between sub arrays and to DC combiner boxes shall be installed in a manner that minimizes the total amount of conduit on the roof by taking the shortest path from the array to the DC combiner box. The DC combiner boxes shall be located such that conduit runs are minimized in the pathways between arrays. DC wiring shall be installed in metallic conduit or raceways when located within enclosed spaces in a building. Conduit shall run along the bottom of load bearing members.*

R331.4 Access and pathways. *Roof access, pathways and spacing requirements shall be provided in accordance with Sections R331.4.1 through R331.4.2.4.*

Exceptions:

1. *Residential structures shall be designed so that each photovoltaic array is no greater than 150 feet (45 720 mm) by 150 feet (45 720 mm) in either axis.*
2. *Panels/modules shall be permitted to be located up to the roof ridge where an alternative ventilation method approved by the fire chief has been provided or where the fire chief has determined vertical ventilation techniques will not be employed.*

R331.4.1 Roof access points. *Roof access points shall be located in areas that do not require the placement of ground ladders over openings such as windows or doors, and located at strong points of building construction in locations where the access point does not conflict with overhead obstructions such as tree limbs, wires or signs.*

R331.4.2 Residential systems for one- and two-family dwellings. *Access to residential systems for one- and two-family dwellings shall be provided in accordance with Sections R331.4.2.1 through R331.4.2.4.*

R331.4.2.1 Residential buildings with hip roof layouts. *Panels/modules installed on residential buildings with hip roof layouts shall be located in a manner that provides a 3-foot-wide (914 mm) clear access pathway from the eave to the ridge on each roof slope where panels/modules are located. The access pathway shall be located at a structurally strong location on the building capable of supporting the live load of fire fighters accessing the roof.*

Exception: *These requirements shall not apply to roofs with slopes of two units vertical in 12 units horizontal (2:12) or less.*

R331.4.2.2 Residential buildings with a single ridge. *Panels/modules installed on residential buildings with a single ridge shall be located in a manner that provides two, 3-foot-wide (914 mm) access pathways from the eave to the ridge on each roof slope where panels/modules are located.*

Exception: *This requirement shall not apply to roofs with slopes of two units vertical in 12 units horizontal (2:12) or less.*

R331.4.2.3 Residential buildings with roof hips and valleys. *Panels/modules installed on residential buildings with roof hips and valleys shall be located no closer than 18 inches (457 mm) to a hip or a valley where panels/modules are to be placed on both sides of a hip or valley. Where panels are to be located on only one side of a hip or valley that is of equal length, the panels shall be permitted to be placed directly adjacent to the hip or valley.*

Exception: *These requirements shall not apply to roofs with slopes of two units vertical in 12 units horizontal (2:12) or less.*

R331.4.2.4 Residential building smoke ventilation. *Panels/modules installed on residential buildings shall be located no higher than 3 feet (914 mm) below the ridge in order to allow for fire department smoke ventilation operations.*

R331.5 Ground-mounted photovoltaic arrays. *Ground-mounted photovoltaic arrays shall comply with Sections R331.1 through R331.3 and this section. Setback requirements shall not apply to ground-mounted, free-standing photovoltaic arrays. A clear, brush-free area of 10 feet (3048 mm) shall be required for ground-mounted photovoltaic arrays.*

CALIFORNIA RESIDENTIAL CODE – MATRIX ADOPTION TABLE
CHAPTER 4 – FOUNDATIONS

(Matrix Adoption Tables are non-regulatory, intended only as an aid to the user.
See Chapter 1 for state agency authority and building applications.)

Adopting agency	BSC	SFM	HCD			DSA		OSHPD				BSCC	DHS	AGR	DWR	CEC	CA	SL	SLC
			1	2	1/AC	AC	SS	1	2	3	4								
Adopt entire chapter																			
Adopt entire chapter as amended (amended sections listed below)			X	X															
Adopt only those sections that are listed below																			
Chapter / Section																			
R401.2			X																
R401.4.1.1 through *R401.4.1.1.5*			X																
R403.1.8			X																
R404.5.1			X																
R408.3			X																
R408.4			X																

* The California Code of Regulations (CCR), Title 19, Division 1 provisions that are found in the *California Fire Code* are a reprint from the current CCR, Title 19, Division 1 text for the code user's convenience only. The scope, applicability and appeals procedures of CCR, Title 19, Division I remain the same.

CHAPTER 4
FOUNDATIONS

SECTION R401
GENERAL

R401.1 Application. The provisions of this chapter shall control the design and construction of the foundation and foundation spaces for all buildings. In addition to the provisions of this chapter, the design and construction of foundations in flood hazard areas as established by Table R301.2(1) shall meet the provisions of Section R322. Wood foundations shall be designed and installed in accordance with AF&PA PWF.

Exception: The provisions of this chapter shall be permitted to be used for wood foundations only in the following situations:

1. In buildings that have no more than two floors and a roof.
2. When interior basement and foundation walls are constructed at intervals not exceeding 50 feet (15 240 mm).

Wood foundations in Seismic Design Category D_0, D_1 or D_2 shall be designed in accordance with accepted engineering practice.

R401.2 Requirements. Foundation construction shall be capable of accommodating all loads according to Section R301 and of transmitting the resulting loads to the supporting soil. Fill soils that support footings and foundations shall be designed, installed and tested in accordance with accepted engineering practice. Gravel fill used as footings for wood and precast concrete foundations shall comply with Section R403.

Note: See Section R301.1.1.1 for limited-density owner-built rural dwellings.

R401.3 Drainage. Surface drainage shall be diverted to a storm sewer conveyance or other approved point of collection that does not create a hazard. Lots shall be graded to drain surface water away from foundation walls. The grade shall fall a minimum of 6 inches (152 mm) within the first 10 feet (3048 mm).

Exception: Where lot lines, walls, slopes or other physical barriers prohibit 6 inches (152 mm) of fall within 10 feet (3048 mm), drains or swales shall be constructed to ensure drainage away from the structure. Impervious surfaces within 10 feet (3048 mm) of the building foundation shall be sloped a minimum of 2 percent away from the building.

R401.4 Soil tests. Where quantifiable data created by accepted soil science methodologies indicate expansive, compressible, shifting or other questionable soil characteristics are likely to be present, the building official shall determine whether to require a soil test to determine the soil's characteristics at a particular location. This test shall be done by an approved agency using an approved method.

R401.4.1 Geotechnical evaluation. In lieu of a complete geotechnical evaluation, the load-bearing values in Table R401.4.1 shall be assumed.

TABLE R401.4.1
PRESUMPTIVE LOAD-BEARING VALUES OF FOUNDATION MATERIALS[a]

CLASS OF MATERIAL	LOAD-BEARING PRESSURE (pounds per square foot)
Crystalline bedrock	12,000
Sedimentary and foliated rock	4,000
Sandy gravel and/or gravel (GW and GP)	3,000
Sand, silty sand, clayey sand, silty gravel and clayey gravel (SW, SP, SM, SC, GM and GC)	2,000
Clay, sandy clay, silty clay, clayey silt, silt and sandy silt (CL, ML, MH and CH)	1,500[b]

For SI: 1 pound per square foot = 0.0479 kPa.

a. When soil tests are required by Section R401.4, the allowable bearing capacities of the soil shall be part of the recommendations.

b. Where the building official determines that in-place soils with an allowable bearing capacity of less than 1,500 psf are likely to be present at the site, the allowable bearing capacity shall be determined by a soils investigation.

R401.4.1.1 General and where required for applications listed in Section 1.8.2.1.1 regulated by the Department of Housing and Community Development. *Foundations and soils investigations shall be conducted in conformance with Health and Safety Code Sections 17953 through 17957 as summarized below.*

R401.4.1.1.1 Preliminary soil report. *Each city, county, or city and county shall enact an ordinance which requires a preliminary soil report, prepared by a civil engineer who is registered by the state. The report shall be based upon adequate test borings or excavations, of every subdivision, where a tentative and final map is required pursuant to Section 66426 of the Government Code.*

The preliminary soil report may be waived if the building department of the city, county or city and county, or other enforcement agency charged with the administration and enforcement of the provisions of Section R401.4.1.1, shall determine that, due to the knowledge such department has as to the soil qualities of the soil of the subdivision or lot, no preliminary analysis is necessary.

R401.4.1.1.2 Soil investigation by lot, necessity, preparation, and recommendations. *If the preliminary soil report indicates the presence of critically expansive soils or other soil problems which, if not corrected, would lead to structural defects, such ordinance shall require a soil investigation of each lot in the subdivision.*

The soil investigation shall be prepared by a civil engineer who is registered in this state. It shall recommend corrective action which is likely to prevent structural damage to each dwelling proposed to be constructed on the expansive soil.

R401.4.1.1.3 Approval, building permit conditions, appeal. *The building department of each city, county or city and county, or other enforcement agency charged with the administration and enforcement of the provisions of this code, shall approve the soil investigation if it determines that the recommended action is likely to prevent structural damage to each dwelling to be constructed. As a condition to the building permit, the ordinance shall require that the approved recommended action be incorporated in the construction of each dwelling. Appeal from such determination shall be to the local appeals board.*

R401.4.1.1.4. Liability. *A city, county, or city and county or other enforcement agency charged with the administration and enforcement of the provisions of Section R401.4.1.1, is not liable for any injury which arises out of any act or omission of the city, county or city and county, or other enforcement agency, or a public employee or any other person under Section R401.4.1.1.1, R401.4.1.1.2 or R401.4.1.1.3.*

R401.4.1.1.5. Alternate procedures. *The governing body of any city, county, or city and county may enact an ordinance prescribing an alternate procedure which is equal to or more restrictive than the procedures specified in Sections R401.4.1.1.1, R401.4.1.1.2 and R401.1.1.3.*

R401.4.2 Compressible or shifting soil. Instead of a complete geotechnical evaluation, when top or subsoils are compressible or shifting, they shall be removed to a depth and width sufficient to assure stable moisture content in each active zone and shall not be used as fill or stabilized within each active zone by chemical, dewatering or presaturation.

SECTION R402
MATERIALS

R402.1 Wood foundations. Wood foundation systems shall be designed and installed in accordance with the provisions of this code.

R402.1.1 Fasteners. Fasteners used below grade to attach plywood to the exterior side of exterior basement or crawlspace wall studs, or fasteners used in knee wall construction, shall be of Type 304 or 316 stainless steel. Fasteners used above grade to attach plywood and all lumber-to-lumber fasteners except those used in knee wall construction shall be of Type 304 or 316 stainless steel, silicon bronze, copper, hot-dipped galvanized (zinc coated) steel nails, or hot-tumbled galvanized (zinc coated) steel nails. Electro-galvanized steel nails and galvanized (zinc coated) steel staples shall not be permitted.

R402.1.2 Wood treatment. All lumber and plywood shall be pressure-preservative treated and dried after treatment in accordance with AWPA U1 (Commodity Specification A, Use Category 4B and Section 5.2), and shall bear the label of an accredited agency. Where lumber and/or plywood is cut or drilled after treatment, the treated surface shall be field treated with copper naphthenate, the concentration of which shall contain a minimum of 2 percent copper metal, by repeated brushing, dipping or soaking until the wood absorbs no more preservative.

R402.2 Concrete. Concrete shall have a minimum specified compressive strength of f'_c, as shown in Table R402.2. Concrete subject to moderate or severe weathering as indicated in Table R301.2(1) shall be air entrained as specified in Table R402.2. The maximum weight of fly ash, other pozzolans, silica fume, slag or blended cements that is included in concrete mixtures for garage floor slabs and for exterior porches, carport slabs and steps that will be exposed to deicing chemicals shall not exceed the percentages of the total weight of cementitious materials specified in Section 4.4.2 of ACI 318. Materials used to produce concrete and testing thereof shall comply with the applicable standards listed in Chapter 3 of ACI 318 or ACI 332.

R402.3 Precast concrete. Precast concrete foundations shall be designed in accordance with Section R404.5 and shall be installed in accordance with the provisions of this code and the manufacturer's installation instructions.

R402.3.1 Precast concrete foundation materials. Materials used to produce precast concrete foundations shall meet the following requirements.

1. All concrete used in the manufacture of precast concrete foundations shall have a minimum compressive strength of 5,000 psi (34 470 kPa) at 28 days. Concrete exposed to a freezing and thawing environment shall be air entrained with a minimum total air content of 5 percent.
2. Structural reinforcing steel shall meet the requirements of ASTM A 615, A 706 or A 996. The minimum yield strength of reinforcing steel shall be 40,000 psi (Grade 40) (276 MPa). Steel reinforcement for precast concrete foundation walls shall have a minimum concrete cover of $^3/_4$ inch (19.1 mm).
3. Panel-to-panel connections shall be made with Grade II steel fasteners.
4. The use of nonstructural fibers shall conform to ASTM C 1116.
5. Grout used for bedding precast foundations placed upon concrete footings shall meet ASTM C 1107.

SECTION R403
FOOTINGS

R403.1 General. All exterior walls shall be supported on continuous solid or fully grouted masonry or concrete footings, crushed stone footings, wood foundations, or other approved structural systems which shall be of sufficient design to accommodate all loads according to Section R301 and to transmit the resulting loads to the soil within the limitations as determined from the character of the soil. Footings shall be supported on undisturbed natural soils or engineered fill. Concrete footing shall be designed and constructed in accordance with the provisions of Section R403 or in accordance with ACI 332.

TABLE R402.2
MINIMUM SPECIFIED COMPRESSIVE STRENGTH OF CONCRETE

TYPE OR LOCATION OF CONCRETE CONSTRUCTION	MINIMUM SPECIFIED COMPRESSIVE STRENGTH[a] (f'_c)		
	Weathering Potential[b]		
	Negligible	Moderate	Severe
Basement walls, foundations and other concrete not exposed to the weather	2,500	2,500	2,500[c]
Basement slabs and interior slabs on grade, except garage floor slabs	2,500	2,500	2,500[c]
Basement walls, foundation walls, exterior walls and other vertical concrete work exposed to the weather	2,500	3,000[d]	3,000[d]
Porches, carport slabs and steps exposed to the weather, and garage floor slabs	2,500	3,000[d, e, f]	3,500[d, e, f]

For SI: 1 pound per square inch = 6.895 kPa.

a. Strength at 28 days psi.

b. See Table R301.2(1) for weathering potential.

c. Concrete in these locations that may be subject to freezing and thawing during construction shall be air-entrained concrete in accordance with Footnote d.

d. Concrete shall be air-entrained. Total air content (percent by volume of concrete) shall be not less than 5 percent or more than 7 percent.

e. See Section R402.2 for maximum cementitious materials content.

f. For garage floors with a steel-troweled finish, reduction of the total air content (percent by volume of concrete) to not less than 3 percent is permitted if the specified compressive strength of the concrete is increased to not less than 4,000 psi.

TABLE R403.1
MINIMUM WIDTH OF CONCRETE, PRECAST OR MASONRY FOOTINGS (inches)[a]

	LOAD-BEARING VALUE OF SOIL (psf)			
	1,500	2,000	3,000	≥ 4,000
Conventional light-frame construction				
1-story	12	12	12	12
2-story	15	12	12	12
3-story	23	17	12	12
4-inch brick veneer over light frame or 8-inch hollow concrete masonry				
1-story	12	12	12	12
2-story	21	16	12	12
3-story	32	24	16	12
8-inch solid or fully grouted masonry				
1-story	16	12	12	12
2-story	29	21	14	12
3-story	42	32	21	16

For SI: 1 inch = 25.4 mm, 1 pound per square foot = 0.0479 kPa.

a. Where minimum footing width is 12 inches, use of a single wythe of solid or fully grouted 12-inch nominal concrete masonry units is permitted.

R403.1.1 Minimum size. Minimum sizes for concrete and masonry footings shall be as set forth in Table R403.1 and Figure R403.1(1). The footing width, W, shall be based on the load-bearing value of the soil in accordance with Table R401.4.1. Spread footings shall be at least 6 inches (152 mm) in thickness, T. Footing projections, P, shall be at least 2 inches (51 mm) and shall not exceed the thickness of the footing. The size of footings supporting piers and columns shall be based on the tributary load and allowable soil pressure in accordance with Table R401.4.1. Footings for wood foundations shall be in accordance with the details set forth in Section R403.2, and Figures R403.1(2) and R403.1(3).

R403.1.2 Continuous footing in Seismic Design Categories D_0, D_1 and D_2. The braced wall panels at exterior walls of buildings located in Seismic Design Categories D_0, D_1 and D_2 shall be supported by continuous footings. All required interior braced wall panels in buildings with plan dimensions greater than 50 feet (15 240 mm) shall also be supported by continuous footings.

R403.1.3 Seismic reinforcing. Concrete footings located in Seismic Design Categories D_0, D_1 and D_2, as established in Table R301.2(1), shall have minimum reinforcement. Bottom reinforcement shall be located a minimum of 3 inches (76 mm) clear from the bottom of the footing.

In Seismic Design Categories D_0, D_1 and D_2 where a construction joint is created between a concrete footing and a stem wall, a minimum of one No. 4 bar shall be installed at not more than 4 feet (1219 mm) on center. The vertical bar shall extend to 3 inches (76 mm) clear of the bottom of the footing, have a standard hook and extend a minimum of 14 inches (357 mm) into the stem wall.

In Seismic Design Categories D_0, D_1 and D_2 where a grouted masonry stem wall is supported on a concrete footing and stem wall, a minimum of one No. 4 bar shall be installed at not more than 4 feet (1219 mm) on center. The vertical bar shall extend to 3 inches (76 mm) clear of the bottom of the footing and have a standard hook.

In Seismic Design Categories D_0, D_1 and D_2 masonry stem walls without solid grout and vertical reinforcing are not permitted.

Exception: In detached one- and two-family dwellings which are three stories or less in height and constructed with stud bearing walls, isolated plain concrete footings, supporting columns or pedestals are permitted.

R403.1.3.1 Foundations with stemwalls. Foundations with stem walls shall have installed a minimum of one No. 4 bar within 12 inches (305 mm) of the top of the wall and one No. 4 bar located 3 inches (76 mm) to 4 inches (102 mm) from the bottom of the footing.

R403.1.3.2 Slabs-on-ground with turned-down footings. Slabs on ground with turned down footings shall have a minimum of one No. 4 bar at the top and the bottom of the footing.

Exception: For slabs-on-ground cast monolithically with the footing, locating one No. 5 bar or two No. 4 bars in the middle third of the footing depth shall be permitted as an alternative to placement at the footing top and bottom.

Where the slab is not cast monolithically with the footing, No. 3 or larger vertical dowels with standard hooks on each end shall be provided in accordance with Figure R403.1.3.2. Standard hooks shall comply with Section R611.5.4.5.

R403.1.4 Minimum depth. All exterior footings shall be placed at least 12 inches (305 mm) below the undisturbed ground surface. Where applicable, the depth of footings shall also conform to Sections R403.1.4.1 through R403.1.4.2.

R403.1.4.1 Frost protection. Except where otherwise protected from frost, foundation walls, piers and other permanent supports of buildings and structures shall be protected from frost by one or more of the following methods:

1. Extended below the frost line specified in Table R301.2.(1);
2. Constructing in accordance with Section R403.3;
3. Constructing in accordance with ASCE 32; or
4. Erected on solid rock.

Exceptions:

1. Protection of freestanding accessory structures with an area of 600 square feet (56 m^2) or less, of light-frame construction, with an eave height of 10 feet (3048 mm) or less shall not be required.
2. Protection of freestanding accessory structures with an area of 400 square feet (37 m^2) or less, of other than light-frame construction, with an

eave height of 10 feet (3048 mm) or less shall not be required.

3. Decks not supported by a dwelling need not be provided with footings that extend below the frost line.

Footings shall not bear on frozen soil unless the frozen condition is permanent.

R403.1.4.2 Seismic conditions. In Seismic Design Categories D_0, D_1 and D_2, interior footings supporting bearing or bracing walls and cast monolithically with a slab on grade shall extend to a depth of not less than 12 inches (305 mm) below the top of the slab.

R403.1.5 Slope. The top surface of footings shall be level. The bottom surface of footings shall not have a slope exceeding one unit vertical in 10 units horizontal (10-percent slope). Footings shall be stepped where it is necessary to change the elevation of the top surface of the footings or where the slope of the bottom surface of the footings will exceed one unit vertical in ten units horizontal (10-percent slope).

R403.1.6 Foundation anchorage. Sill plates and walls supported directly on continuous foundations shall be anchored to the foundation in accordance with this section.

Wood sole plates at all exterior walls on monolithic slabs, wood sole plates of braced wall panels at building interiors on monolithic slabs and all wood sill plates shall be anchored to the foundation with anchor bolts spaced a maximum of 6 feet (1829 mm) on center. Bolts shall be at least $^1/_2$ inch (12.7 mm) in diameter and shall extend a minimum of 7 inches (178 mm) into concrete or grouted cells of concrete masonry units. A nut and washer shall be tightened on each anchor bolt. There shall be a minimum of two bolts per plate section with one bolt located not more than 12 inches (305 mm) or less than seven bolt diameters from each end of the plate section. Interior bearing wall sole plates on monolithic slab foundation that are not part of a braced wall panel shall be positively anchored with approved fasteners. Sill plates and sole plates shall be protected against decay and termites where required by Sections R317 and R318. Cold-formed steel framing systems shall be fastened to wood sill plates or anchored directly to the foundation as required in Section R505.3.1 or R603.3.1.

Exceptions:

1. Foundation anchorage, spaced as required to provide equivalent anchorage to $^1/_2$-inch-diameter (12.7 mm) anchor bolts.
2. Walls 24 inches (610 mm) total length or shorter connecting offset braced wall panels shall be anchored to the foundation with a minimum of one anchor bolt located in the center third of the plate section and shall be attached to adjacent braced wall panels at corners as shown in item 8 of Table R602.3(1).
3. Connection of walls 12 inches (305 mm) total length or shorter connecting offset braced wall panels to the foundation without anchor bolts shall be permitted. The wall shall be attached to adjacent braced wall panels at corners as shown in item 8 of Table R602.3(1).

R403.1.6.1 Foundation anchorage in Seismic Design Categories C, D_0, D_1 and D_2. In addition to the requirements of Section R403.1.6, the following requirements shall apply to wood light-frame structures in Seismic Design Categories D_0, D_1 and D_2 and wood light-frame townhouses in Seismic Design Category C.

1. Plate washers conforming to Section R602.11.1 shall be provided for all anchor bolts over the full length of required braced wall lines except where approved anchor straps are used. Properly sized cut washers shall be permitted for anchor bolts in wall lines not containing braced wall panels.
2. Interior braced wall plates shall have anchor bolts spaced at not more than 6 feet (1829 mm) on center and located within 12 inches (305 mm) of the ends of each plate section when supported on a continuous foundation.
3. Interior bearing wall sole plates shall have anchor bolts spaced at not more than 6 feet (1829 mm) on center and located within 12 inches (305 mm) of the ends of each plate section when supported on a continuous foundation.
4. The maximum anchor bolt spacing shall be 4 feet (1219 mm) for buildings over two stories in height.
5. Stepped cripple walls shall conform to Section R602.11.2.
6. Where continuous wood foundations in accordance with Section R404.2 are used, the force transfer shall have a capacity equal to or greater than the connections required by Section R602.11.1 or the braced wall panel shall be connected to the wood foundations in accordance with the braced wall panel-to-floor fastening requirements of Table R602.3(1).

R403.1.7 Footings on or adjacent to slopes. The placement of buildings and structures on or adjacent to slopes steeper than one unit vertical in three units horizontal (33.3-percent slope) shall conform to Sections R403.1.7.1 through R403.1.7.4.

R403.1.7.1 Building clearances from ascending slopes. In general, buildings below slopes shall be set a sufficient distance from the slope to provide protection from slope drainage, erosion and shallow failures. Except as provided in Section R403.1.7.4 and Figure R403.1.7.1, the following criteria will be assumed to provide this protection. Where the existing slope is steeper than one unit vertical in one unit horizontal (100-percent slope), the toe of the slope shall be assumed to be at the intersection of a horizontal plane drawn from the top of the foundation and a plane drawn tangent to the slope at an angle of 45 degrees (0.79 rad) to the horizontal. Where a retaining wall is constructed at the toe of the slope, the height of the slope shall be measured from the top of the wall to the top of the slope.

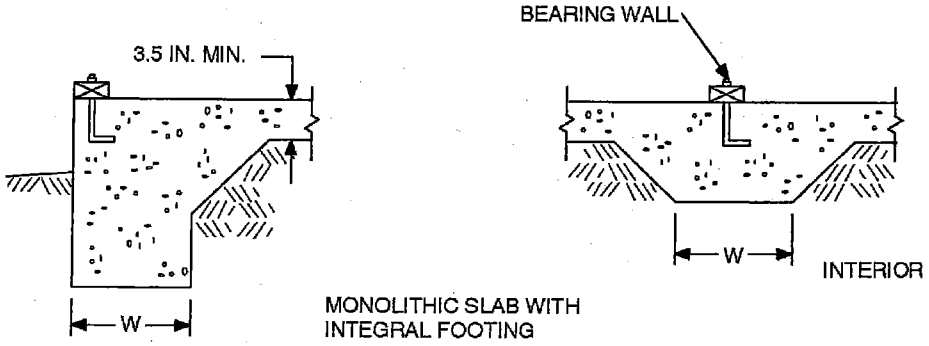

MONOLITHIC SLAB WITH
INTEGRAL FOOTING

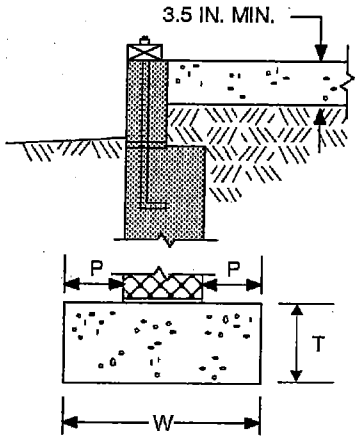

GROUND SUPPORT SLAB
WITH MASONRY WALL
AND SPREAD FOOTING

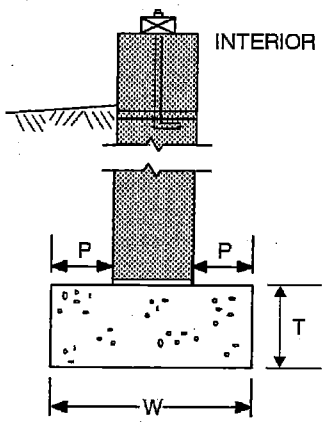

BASEMENT OR CRAWL SPACE
WITH MASONRY WALL AND
SPREAD FOOTING

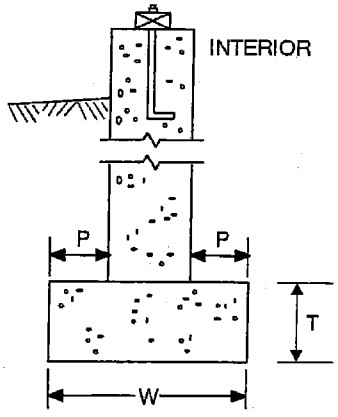

BASEMENT OR CRAWL SPACE
WITH CONCRETE WALL AND
SPREAD FOOTING

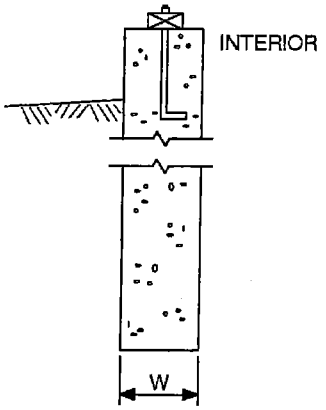

BASEMENT OR CRAWL SPACE
WITH FOUNDATION WALL
BEARING DIRECTLY ON SOIL

For SI: 1 inch = 25.4 mm.

FIGURE R403.1(1)
CONCRETE AND MASONRY FOUNDATION DETAILS

3800

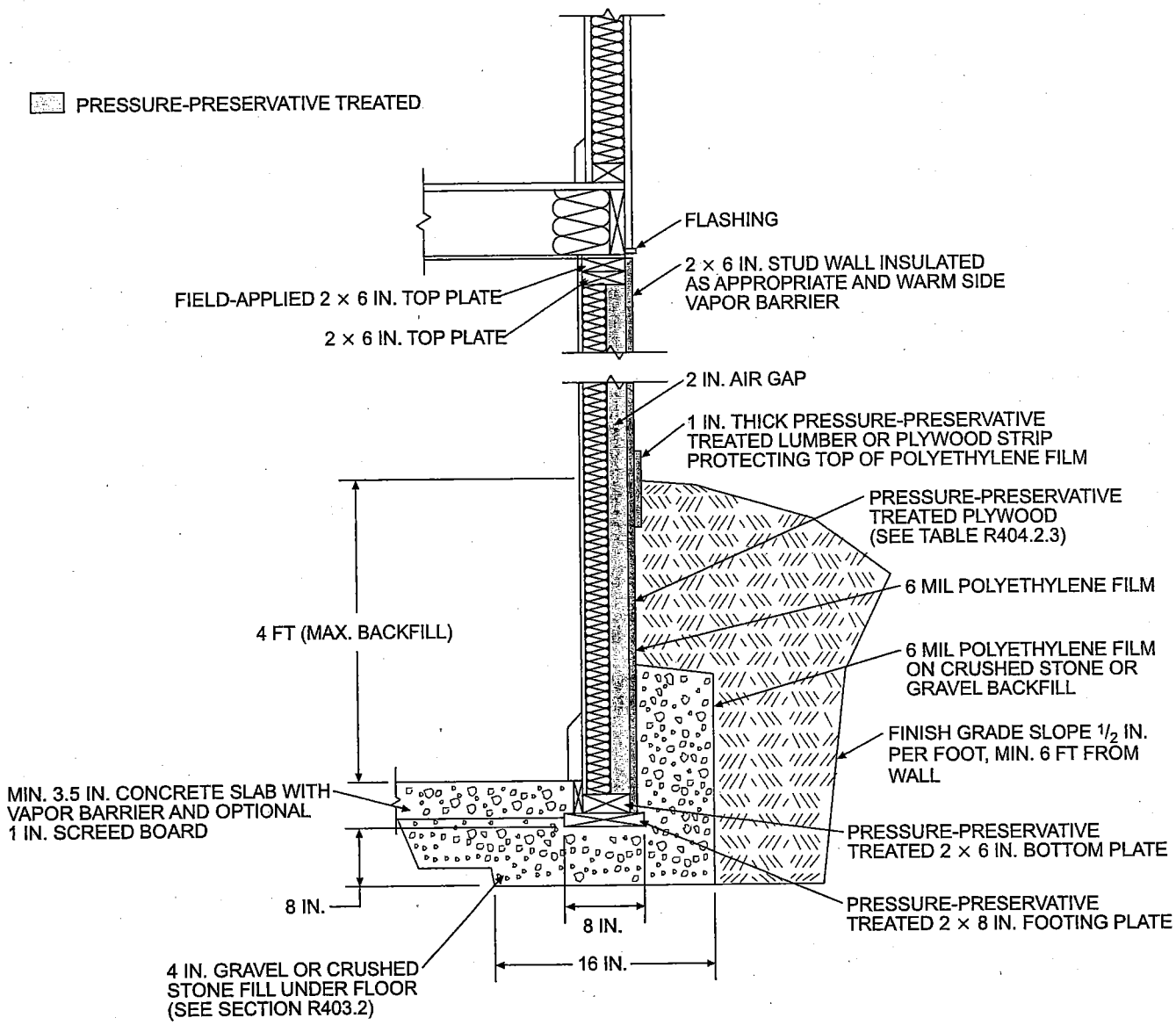

For SI: 1 inch = 25.4 mm, 1 foot = 304.8 mm, 1 mil = 0.0254.

FIGURE R403.1(2)
PERMANENT WOOD FOUNDATION BASEMENT WALL SECTION

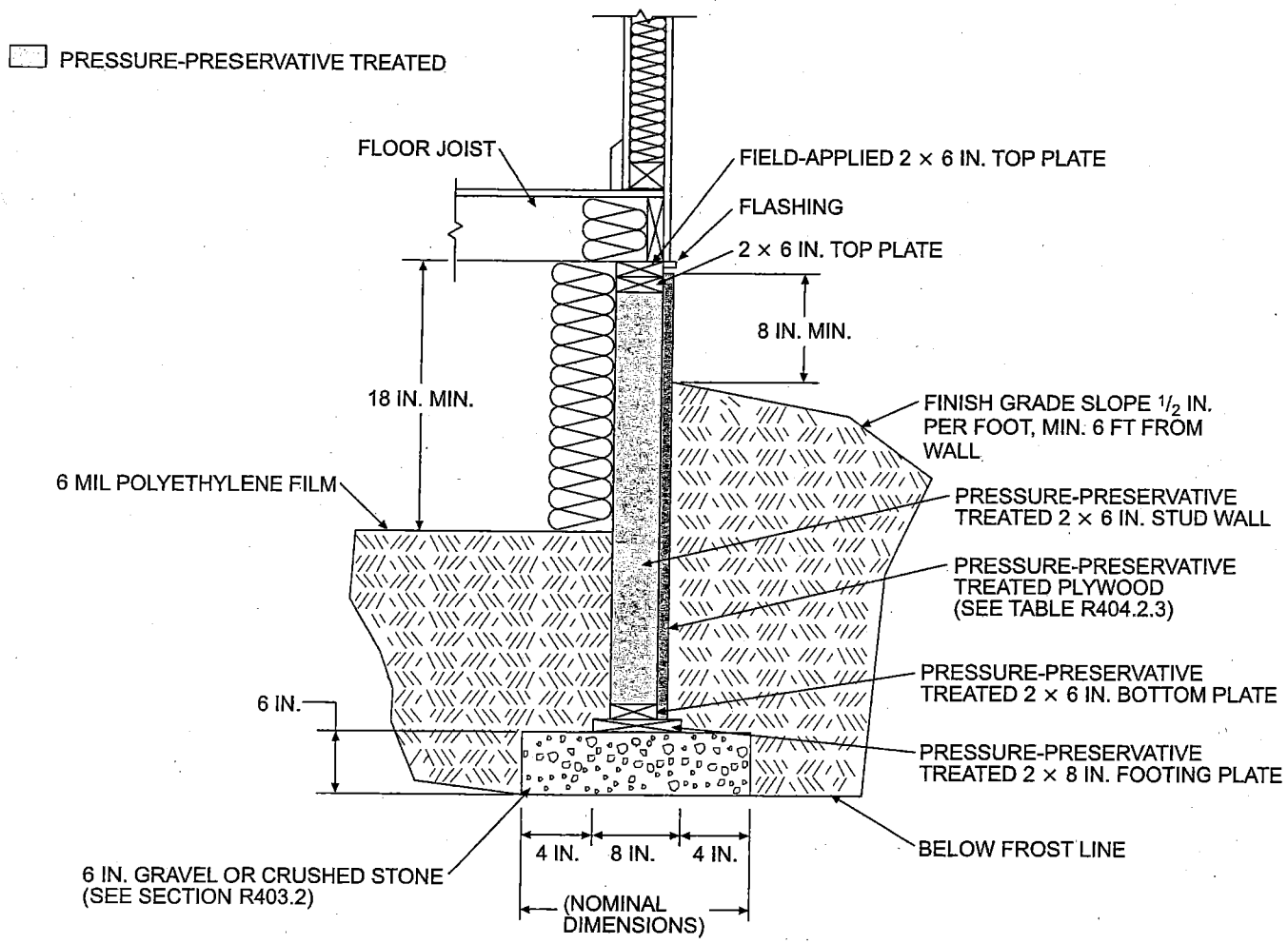

For SI: 1 inch = 25.4 mm, 1 foot = 304.8 mm, 1 mil = 0.0254 mm.

FIGURE R403.1(3)
PERMANENT WOOD FOUNDATION CRAWL SPACE SECTION

R403.1.7.2 Footing setback from descending slope surfaces. Footings on or adjacent to slope surfaces shall be founded in material with an embedment and setback from the slope surface sufficient to provide vertical and lateral support for the footing without detrimental settlement. Except as provided for in Section R403.1.7.4 and Figure R403.1.7.1, the following setback is deemed adequate to meet the criteria. Where the slope is steeper than one unit vertical in one unit horizontal (100-percent slope), the required setback shall be measured from an imaginary plane 45 degrees (0.79 rad) to the horizontal, projected upward from the toe of the slope.

R403.1.7.3 Foundation elevation. On graded sites, the top of any exterior foundation shall extend above the elevation of the street gutter at point of discharge or the inlet of an approved drainage device a minimum of 12 inches (305 mm) plus 2 percent. Alternate elevations are permitted subject to the approval of the building official, provided it can be demonstrated that required drainage to the point of discharge and away from the structure is provided at all locations on the site.

R403.1.7.4 Alternate setback and clearances. Alternate setbacks and clearances are permitted, subject to the approval of the building official. The building official is permitted to require an investigation and recommendation of a qualified engineer to demonstrate that the intent of this section has been satisfied. Such an investigation shall include consideration of material, height of slope, slope gradient, load intensity and erosion characteristics of slope material.

R403.1.8 Foundations on expansive soils. Foundation and floor slabs for buildings located on expansive soils shall be designed in accordance with Section 1808.6 of the *California Building Code*.

Exception: Slab-on-ground and other foundation systems which have performed adequately in soil conditions similar to those encountered at the building site

are permitted subject to the approval of the building official.

R403.1.8.1 Expansive soils classifications. Soils meeting all four of the following provisions shall be considered expansive, except that tests to show compliance with Items 1, 2 and 3 shall not be required if the test prescribed in Item 4 is conducted:

1. Plasticity Index (PI) of 15 or greater, determined in accordance with ASTM D 4318.
2. More than 10 percent of the soil particles pass a No. 200 sieve (75 μm), determined in accordance with ASTM D 422.
3. More than 10 percent of the soil particles are less than 5 micrometers in size, determined in accordance with ASTM D 422.
4. Expansion Index greater than 20, determined in accordance with ASTM D 4829.

R403.2 Footings for wood foundations. Footings for wood foundations shall be in accordance with Figures R403.1(2) and R403.1(3). Gravel shall be washed and well graded. The maximum size stone shall not exceed $^3/_4$ inch (19.1 mm). Gravel shall be free from organic, clayey or silty soils. Sand shall be coarse, not smaller than $^1/_{16}$-inch (1.6 mm) grains and shall be free from organic, clayey or silty soils. Crushed stone shall have a maximum size of $^1/_2$ inch (12.7 mm).

R403.3 Frost-protected shallow foundations. For buildings where the monthly mean temperature of the building is maintained at a minimum of 64°F (18°C), footings are not required to extend below the frost line when protected from frost by insulation in accordance with Figure R403.3(1) and Table R403.3(1). Foundations protected from frost in accordance with Figure R403.3(1) and Table R403.3(1) shall not be used for unheated spaces such as porches, utility rooms, garages and carports, and shall not be attached to basements or crawl spaces that are not maintained at a minimum monthly mean temperature of 64°F (18°C).

Materials used below grade for the purpose of insulating footings against frost shall be labeled as complying with ASTM C 578.

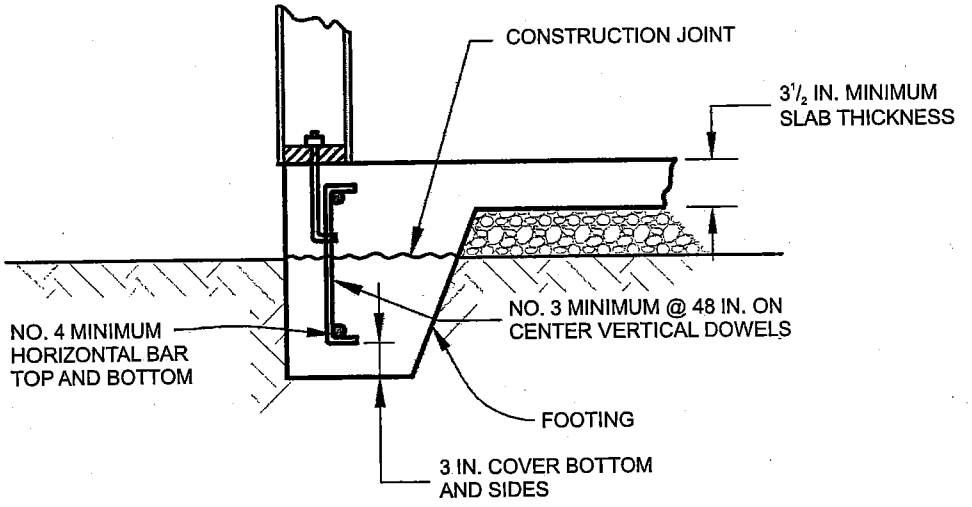

For SI: 1 inch = 25.4 mm.

FIGURE R403.1.3.2
DOWELS FOR SLABS-ON-GROUND WITH TURNED-DOWN FOOTINGS

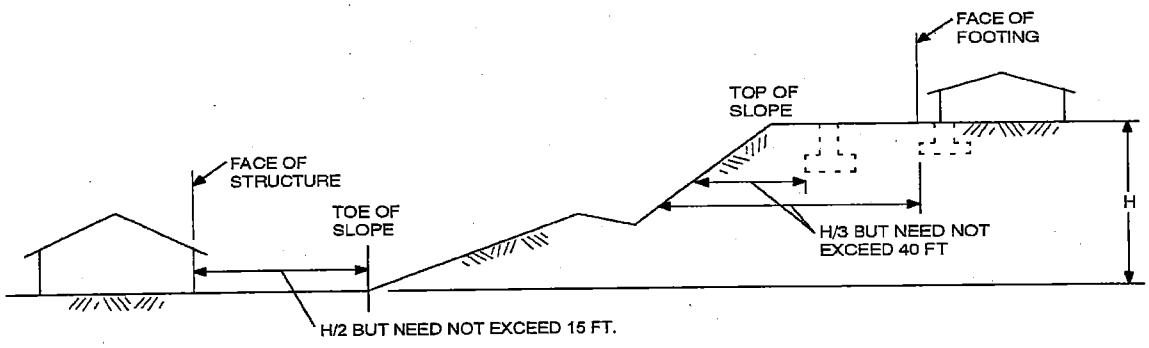

For SI: 1 foot = 304.8 mm.

FIGURE R403.1.7.1
FOUNDATION CLEARANCE FROM SLOPES

3803

TABLE R403.3(1)
MINIMUM FOOTING DEPTH AND INSULATION REQUIREMENTS FOR FROST-PROTECTED FOOTINGS IN HEATED BUILDINGS[a]

AIR FREEZING INDEX (°F-days)[b]	MINIMUM FOOTING DEPTH, D (inches)	VERTICAL INSULATION R-VALUE[c, d]	HORIZONTAL INSULATION R-VALUE[c, e]		HORIZONTAL INSULATION DIMENSIONS PER FIGURE R403.3(1) (inches)		
			Along walls	At corners	A	B	C
1,500 or less	12	4.5	Not required	Not required	Not required	Not required	Not required
2,000	14	5.6	Not required	Not required	Not required	Not required	Not required
2,500	16	6.7	1.7	4.9	12	24	40
3,000	16	7.8	6.5	8.6	12	24	40
3,500	16	9.0	8.0	11.2	24	30	60
4,000	16	10.1	10.5	13.1	24	36	60

For SI: 1 inch = 25.4 mm, °C = [(°F) - 32]/1.8.

a. Insulation requirements are for protection against frost damage in heated buildings. Greater values may be required to meet energy conservation standards.

b. See Figure R403.3(2) or Table R403.3(2) for Air Freezing Index values.

c. Insulation materials shall provide the stated minimum *R*-values under long-term exposure to moist, below-ground conditions in freezing climates. The following *R*-values shall be used to determine insulation thicknesses required for this application: Type II expanded polystyrene-2.4*R* per inch; Type IV extruded polystyrene-4.5*R* per inch; Type VI extruded polystyrene-4.5*R* per inch; Type IX expanded polystyrene-3.2*R* per inch; Type X extruded polystyrene-4.5*R* per inch.

d. Vertical insulation shall be expanded polystyrene insulation or extruded polystyrene insulation.

e. Horizontal insulation shall be extruded polystyrene insulation.

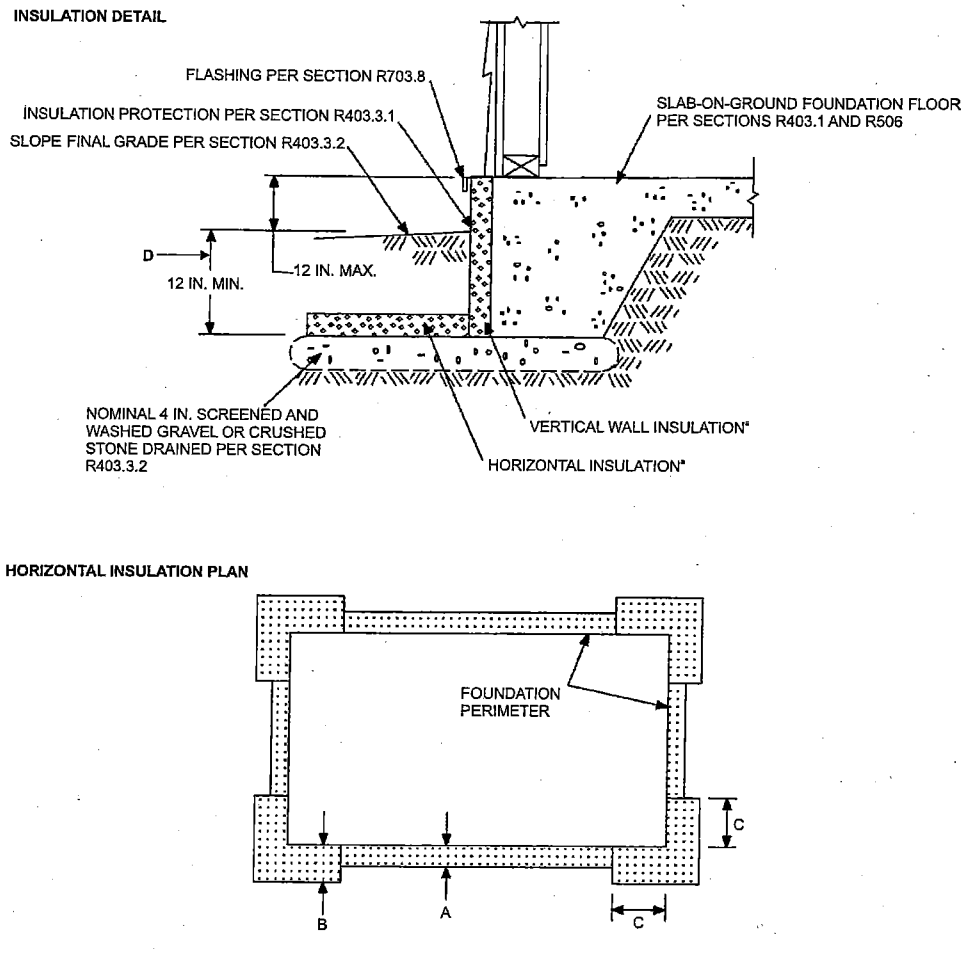

For SI: 1 inch = 25.4 mm.

a. See Table R403.3(1) for required dimensions and *R*-values for vertical and horizontal insulation and minimum footing depth.

FIGURE R403.3(1)
INSULATION PLACEMENT FOR FROST PROTECTED FOOTINGS IN HEATED BUILDINGS

3804

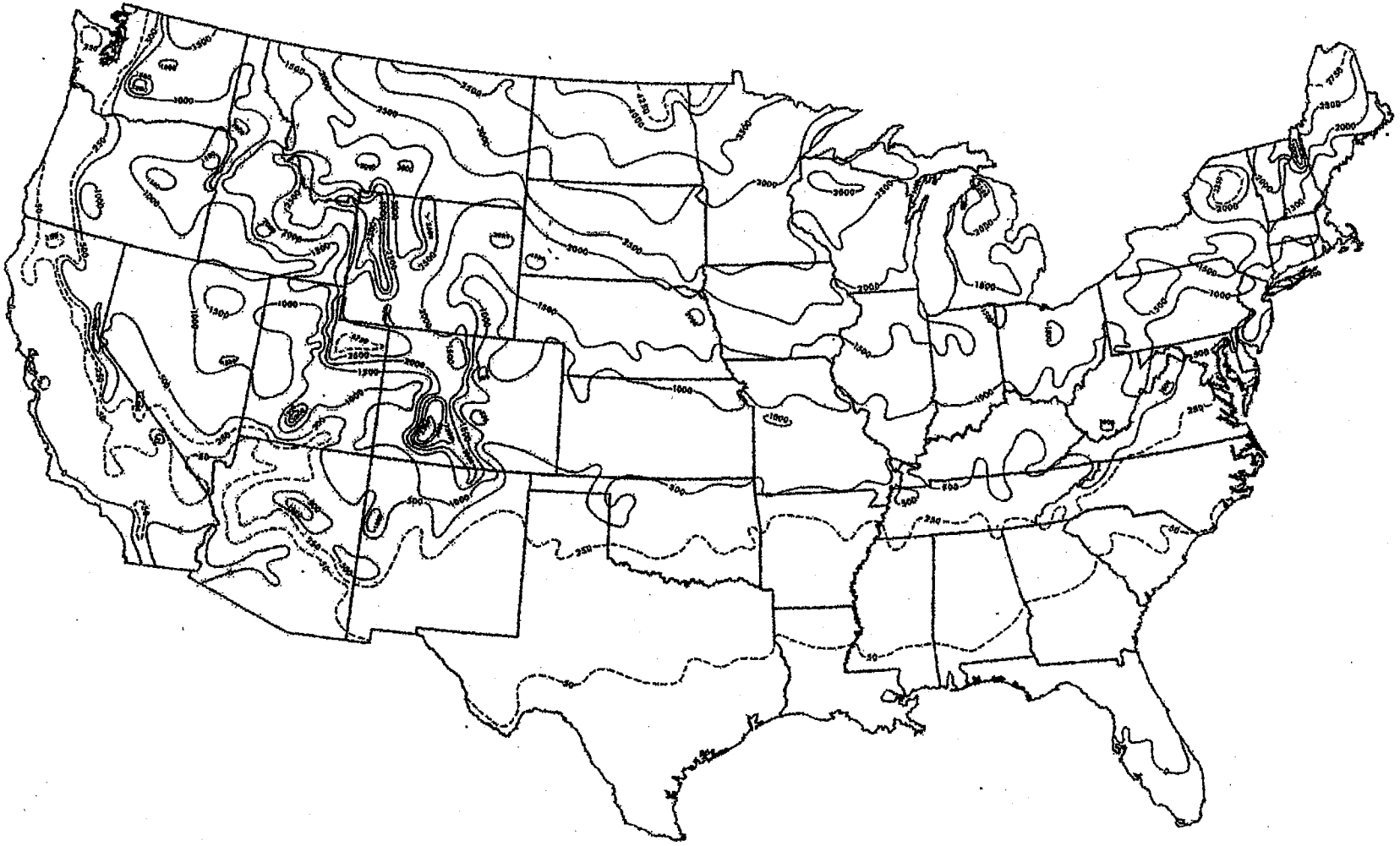

For SI: °C = [(°F) -32]/1.8.

Note: The air-freezing index is defined as cumulative degree days below 32°F. It is used as a measure of the combined magnitude and duration of air temperature below freezing. The index was computed over a 12-month period (July-June) for each of the 3,044 stations used in the above analysis. Date from the 1951-80 period were fitted to a Weibull probability distribution to produce an estimate of the 100-year return period.

FIGURE R403.3(2)
AIR-FREEZING INDEX AN ESTIMATE OF THE 100-YEAR RETURN PERIOD

TABLE R403.3(2)
AIR-FREEZING INDEX FOR U.S. LOCATIONS BY COUNTY

STATE	AIR-FREEZING INDEX					
	1500 or less	2000	2500	3000	3500	4000
Alabama	All counties	—	—	—	—	—
Alaska	Ketchikan Gateway, Prince of Wales-Outer Ketchikan (CA), Sitka, Wrangell-Petersburg (CA)	—	Aleutians West (CA), Haines, Juneau, Skagway-Hoonah-Angoon (CA), Yakutat	—	—	All counties not listed
Arizona	All counties	—	—	—	—	—
Arkansas	All counties	—	—	—	—	—
California	All counties not listed	Nevada, Sierra	—	—	—	—
Colorado	All counties not listed	Archuleta, Custer, Fremont, Huerfano, Las Animas, Ouray, Pitkin, San Miguel	Clear Creek, Conejos, Costilla, Dolores, Eagle, La Plata, Park, Routt, San Juan, Summit	Alamosa, Grand, Jackson, Larimer, Moffat, Rio Blanco, Rio Grande	Chaffee, Gunnison, Lake, Saguache	Hinsdale, Mineral
Connecticut	All counties not listed	Hartford, Litchfield	—	—	—	—
Delaware	All counties	—	—	—	—	—
District of Columbia	All counties	—	—	—	—	—
Florida	All counties	—	—	—	—	—
Georgia	All counties	—	—	—	—	—
Hawaii	All counties	—	—	—	—	—
Idaho	All counties not listed	Adams, Bannock, Blaine, Clearwater, Idaho, Lincoln, Oneida, Power, Valley, Washington	Bingham, Bonneville, Camas, Caribou, Elmore, Franklin, Jefferson, Madison, Teton	Bear Lake, Butte, Custer, Fremont, Lemhi	Clark	—
Illinois	All counties not listed	Boone, Bureau, Cook, Dekalb, DuPage, Fulton, Grundy, Henderson, Henry, Iroquois, Jo Daviess, Kane, Kankakee, Kendall, Knox, La Salle, Lake, Lee, Livingston, Marshall, Mason, McHenry, McLean, Mercer, Peoria, Putnam, Rock Island, Stark, Tazewell, Warren, Whiteside, Will, Woodford	Carroll, Ogle, Stephenson, Winnebago	—	—	—
Indiana	All counties not listed	Allen, Benton, Cass, Fountain, Fulton, Howard, Jasper, Kosciusko, La Porte, Lake, Marshall, Miami, Newton, Porter, Pulaski, Starke, Steuben, Tippecanoe, Tipton, Wabash, Warren, White	—	—	—	—

(continued)

TABLE R403.3(2)—continued
AIR-FREEZING INDEX FOR U.S. LOCATIONS BY COUNTY

STATE	AIR-FREEZING INDEX					
	1500 or less	2000	2500	3000	3500	4000
Iowa	Appanoose, Davis, Fremont, Lee, Van Buren	All counties not listed	Allamakee, Black Hawk, Boone, Bremer, Buchanan, Buena Vista, Butler, Calhoun, Cerro Gordo, Cherokee, Chickasaw, Clay, Clayton, Delaware, Dubuque, Fayette, Floyd, Franklin, Grundy, Hamilton, Hancock, Hardin, Humboldt, Ida, Jackson, Jasper, Jones, Linn, Marshall, Palo Alto, Plymouth, Pocahontas, Poweshiek, Sac, Sioux, Story, Tama, Webster, Winnebago, Woodbury, Worth, Wright	Dickinson, Emmet, Howard, Kossuth, Lyon, Mitchell, O'Brien, Osceola, Winneshiek	—	—
Kansas	All counties	—	—	—	—	—
Kentucky	All counties	—	—	—	—	—
Louisiana	All counties	—	—	—	—	—
Maine	York	Knox, Lincoln, Sagadahoc	Androscoggin, Cumberland, Hancock, Kennebec, Waldo, Washington	Aroostook, Franklin, Oxford, Penobscot, Piscataquis, Somerset	—	—
Maryland	All counties	—	—	—	—	—
Massachusetts	All counties not listed	Berkshire, Franklin, Hampden, Worcester	—	—	—	—
Michigan	Berrien, Branch, Cass, Kalamazoo, Macomb, Ottawa, St. Clair, St. Joseph	All counties not listed	Alger, Charlevoix, Cheboygan, Chippewa, Crawford, Delta, Emmet, Iosco, Kalkaska, Lake, Luce, Mackinac, Menominee, Missaukee, Montmorency, Ogemaw, Osceola, Otsego, Roscommon, Schoolcraft, Wexford	Baraga, Dickinson, Iron, Keweenaw, Marquette	Gogebic, Houghton, Ontonagon	—
Minnesota	—	—	Houston, Winona	All counties not listed	Aitkin, Big Stone, Carlton, Crow Wing, Douglas, Itasca, Kanabec, Lake, Morrison, Pine, Pope, Stearns, Stevens, Swift, Todd, Wadena	Becker, Beltrami, Cass, Clay, Clearwater, Grant, Hubbard, Kittson, Koochiching, Lake of the Woods, Mahnomen, Marshall, Norman, Otter Tail, Pennington, Polk, Red Lake, Roseau, St. Louis, Traverse, Wilkin

(continued)

TABLE R403.3(2)—continued
AIR-FREEZING INDEX FOR U.S. LOCATIONS BY COUNTY

STATE	AIR-FREEZING INDEX					
	1500 or less	2000	2500	3000	3500	4000
Mississippi	All counties	—	—	—	—	—
Missouri	All counties not listed	Atchison, Mercer, Nodaway, Putnam	—	—	—	—
Montana	Mineral	Broadwater, Golden Valley, Granite, Lake, Lincoln, Missoula, Ravalli, Sanders, Sweet Grass	Big Horn, Carbon, Jefferson, Judith Basin, Lewis and Clark, Meagher, Musselshell, Powder River, Powell, Silver Bow, Stillwater, Westland	Carter, Cascade, Deer Lodge, Falcon, Fergus, Flathead, Gallanting, Glacier, Madison, Park, Petroleum, Ponder, Rosebud, Teton, Treasure, Yellowstone	Beaverhead, Blaine, Chouteau, Custer, Dawson, Garfield, Liberty, McCone, Prairie, Toole, Wibaux	Daniels, Hill, Phillips, Richland, Roosevelt, Sheridan, Valley
Nebraska	Adams, Banner, Chase, Cheyenne, Clay, Deuel, Dundy, Fillmore, Franklin, Frontier, Furnas, Gage, Garden, Gosper, Harlan, Hayes, Hitchcock, Jefferson, Kimball, Morrill, Nemaha, Nuckolls, Pawnee, Perkins, Phelps, Red Willow, Richardson, Saline, Scotts Bluff, Seward, Thayer, Webster	All counties not listed	Boyd, Burt, Cedar, Cuming, Dakota, Dixon, Dodge, Knox, Thurston	—	—	—
Nevada	All counties not listed	Elko, Eureka, Nye, Washoe, White Pine	—	—	—	—
New Hampshire	—	All counties not listed	—	—	—	Carroll, Coos, Grafton
New Jersey	All counties	—	—	—	—	—
New Mexico	All counties not listed	Rio Arriba	Colfax, Mora, Taos	—	—	—
New York	Albany, Bronx, Cayuga, Columbia, Cortland, Dutchess, Genessee, Kings, Livingston, Monroe, Nassau, New York, Niagara, Onondaga, Ontario, Orange, Orleans, Putnam, Queens, Richmond, Rockland, Seneca, Suffolk, Wayne, Westchester, Yates	All counties not listed	Clinton, Essex, Franklin, Hamilton, Herkimer, Jefferson, Lewis, St. Lawrence, Warren	—	—	—
North Carolina	All counties	—	—	—	—	—

(continued)

TABLE R403.3(2)—continued
AIR-FREEZING INDEX FOR U.S. LOCATIONS BY COUNTY

STATE	AIR-FREEZING INDEX					
	1500 or less	2000	2500	3000	3500	4000
North Dakota	—	—	—	Billings, Bowman	Adams, Dickey, Golden Valley, Hettinger, LaMoure, Oliver, Ransom, Sargent, Sioux, Slope, Stark	All counties not listed
Ohio	All counties not listed	Ashland, Crawford, Defiance, Holmes, Huron, Knox, Licking, Morrow, Paulding, Putnam, Richland, Seneca, Williams	—	—	—	—
Oklahoma	All counties	—	—	—	—	—
Oregon	All counties not listed	Baker, Crook, Grant, Harney	—	—	—	—
Pennsylvania	All counties not listed	Berks, Blair, Bradford, Cambria, Cameron, Centre, Clarion, Clearfield, Clinton, Crawford, Elk, Forest, Huntingdon, Indiana, Jefferson, Lackawanna, Lycoming, McKean, Pike, Potter, Susquehanna, Tioga, Venango, Warren, Wayne, Wyoming	—	—	—	—
Rhode Island	All counties	—	—	—	—	—
South Carolina	All counties	—	—	—	—	—
South Dakota	—	Bennett, Custer, Fall River, Lawrence, Mellette, Shannon, Todd, Tripp	Bon Homme, Charles Mix, Davison, Douglas, Gregory, Jackson, Jones, Lyman	All counties not listed	Beadle, Brookings, Brown, Campbell, Codington, Corson, Day, Deuel, Edmunds, Faulk, Grant, Hamlin, Kingsbury, Marshall, McPherson, Perkins, Roberts, Spink, Walworth	—
Tennessee	All counties	—	—	—	—	—
Texas	All counties	—	—	—	—	—
Utah	All counties not listed	Box Elder, Morgan, Weber	Garfield, Salt Lake, Summit	Carbon, Daggett, Duchesne, Rich, Sanpete, Uintah, Wasatch	—	—

(continued)

TABLE R403.3(2)—continued
AIR-FREEZING INDEX FOR U.S. LOCATIONS BY COUNTY

STATE	AIR-FREEZING INDEX					
	1500 or less	2000	2500	3000	3500	4000
Vermont	—	Bennington, Grand Isle, Rutland, Windham	Addison, Chittenden, Franklin, Orange, Washington, Windsor	Caledonia, Essex, Lamoille, Orleans	—	—
Virginia	All counties	—	—	—	—	—
Washington	All counties not listed	Chelan, Douglas, Ferry, Okanogan	—	—	—	—
West Virginia	All counties	—	—	—	—	—
Wisconsin	—	Kenosha, Kewaunee, Racine, Sheboygan, Walworth	All counties not listed	Ashland, Barron, Burnett, Chippewa, Clark, Dunn, Eau Claire, Florence, Forest, Iron, Jackson, La Crosse, Langlade, Marathon, Monroe, Pepin, Polk, Portage, Price, Rust, St. Croix, Taylor, Trempealeau, Vilas, Wood	Bayfield, Douglas, Lincoln, Oneida, Sawyer, Washburn	—
Wyoming	Goshen, Platte	Converse, Crook, Laramie, Niobrara	Campbell, Carbon, Hot Springs, Johnson, Natrona, Sheridan, Uinta, Weston	Albany, Big Horn, Park, Washakie	Fremont, Teton	Lincoln, Sublette, Sweetwater

INSULATION DETAIL

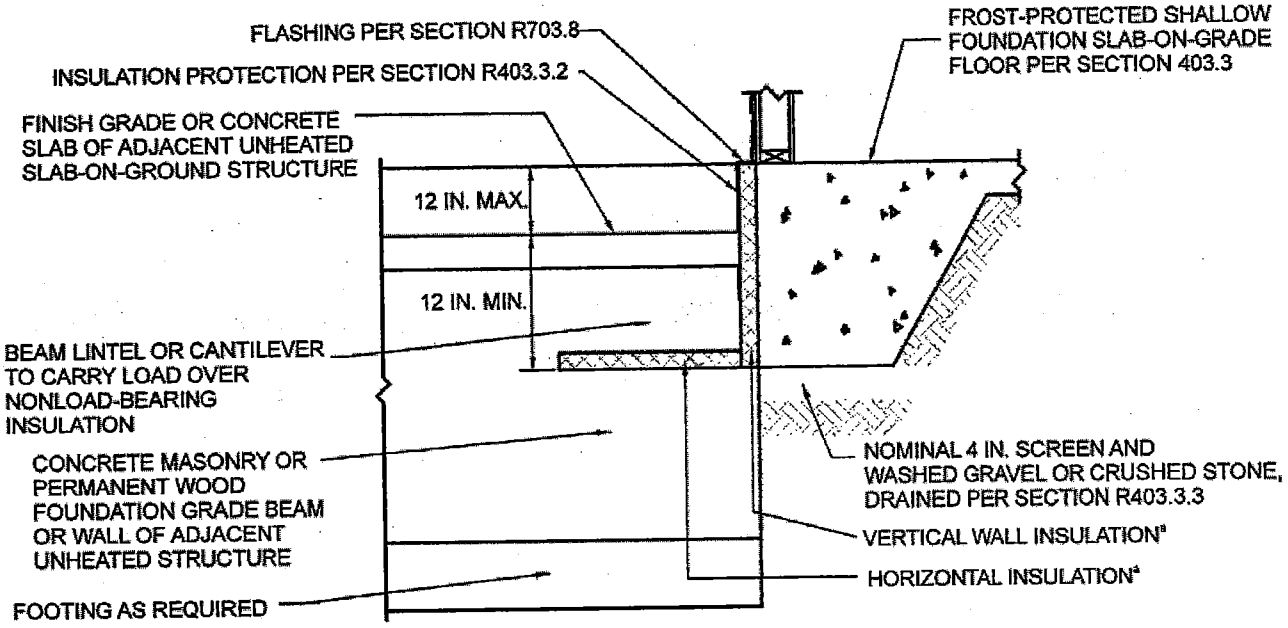

HORIZONTAL INSULATION PLAN

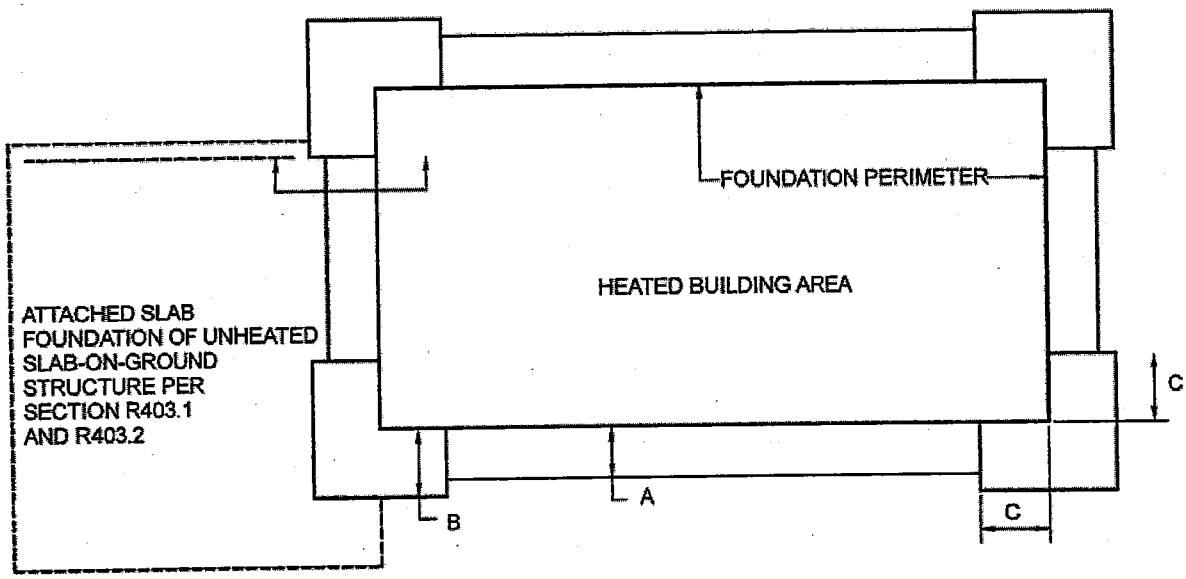

For SI: 1 inch = 25.4 mm.

a. See Table R403.3(1) for required dimensions and *R*-values for vertical and horizontal insulation.

FIGURE R403.3(3)
INSULATION PLACEMENT FOR FROST-PROTECTED FOOTINGS ADJACENT TO UNHEATED SLAB-ON-GROUND STRUCTURE

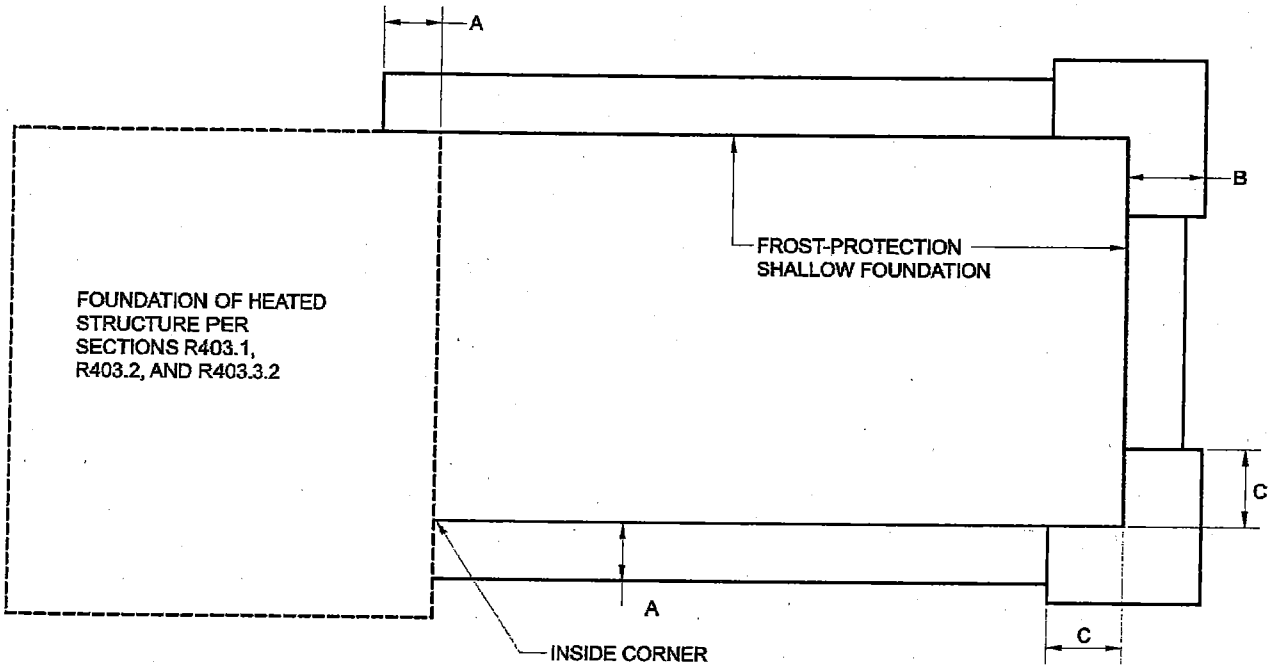

FIGURE R403.3(4)
INSULATION PLACEMENT FOR FROST-PROTECTED FOOTINGS ADJACENT TO HEATED STRUCTURE

R403.3.1 Foundations adjoining frost-protected shallow foundations. Foundations that adjoin frost-protected shallow foundations shall be protected from frost in accordance with Section R403.1.4.

R403.3.1.1 Attachment to unheated slab-on-ground structure. Vertical wall insulation and horizontal insulation of frost protected shallow foundations that adjoin a slab-on-ground foundation that does not have a monthly mean temperature maintained at a minimum of 64°F (18°C) shall be in accordance with Figure R403.3(3) and Table R403.3(1). Vertical wall insulation shall extend between the frost protected shallow foundation and the adjoining slab foundation. Required horizontal insulation shall be continuous under the adjoining slab foundation and through any foundation walls adjoining the frost protected shallow foundation. Where insulation passes through a foundation wall, it shall either be of a type complying with this section and having bearing capacity equal to or greater than the structural loads imposed by the building, or the building shall be designed and constructed using beams, lintels, cantilevers or other means of transferring building loads such that the structural loads of the building do not bear on the insulation.

R403.3.1.2 Attachment to heated structure. Where a frost-protected shallow foundation abuts a structure that has a monthly mean temperature maintained at a minimum of 64°F (18°C), horizontal insulation and vertical wall insulation shall not be required between the frost-protected shallow foundation and the adjoining structure. Where the frost-protected shallow foundation abuts the heated structure, the horizontal insulation and vertical wall insulation shall extend along the adjoining foundation in accordance with Figure R403.3(4) a distance of not less than Dimension A in Table R403.3(1).

Exception: Where the frost-protected shallow foundation abuts the heated structure to form an inside corner, vertical insulation extending along the adjoining foundation is not required.

R403.3.2 Protection of horizontal insulation below ground. Horizontal insulation placed less than 12 inches (305 mm) below the ground surface or that portion of horizontal insulation extending outward more than 24 inches (610 mm) from the foundation edge shall be protected against damage by use of a concrete slab or asphalt paving on the ground surface directly above the insulation or by cementitious board, plywood rated for below-ground use, or other approved materials placed below ground, directly above the top surface of the insulation.

R403.3.3 Drainage. Final grade shall be sloped in accordance with Section R401.3. In other than Group I Soils, as detailed in Table R405.1, gravel or crushed stone beneath horizontal insulation below ground shall drain to daylight or into an approved sewer system.

R403.3.4 Termite damage. The use of foam plastic in areas of "very heavy" termite infestation probability shall be in accordance with Section R318.4.

R403.4 Footings for precast concrete foundations. Footings for precast concrete foundations shall comply with Section R403.4.

R403.4.1 Crushed stone footings. Clean crushed stone shall be free from organic, clayey or silty soils. Crushed stone shall be angular in nature and meet ASTM C 33, with the maximum size stone not to exceed $^1/_2$ inch (12.7 mm) and the minimum stone size not to be smaller than $^1/_{16}$-inch (1.6 mm). Crushed stone footings for precast foundations shall be installed in accordance with Figure R403.4(1) and Table R403.4. Crushed stone footings shall be consolidated using a vibratory plate in a maximum of 8-inch lifts. Crushed stone footings shall be limited to Seismic Design Categories A, B and C.

R403.4.2 Concrete footings. Concrete footings shall be installed in accordance with Section R403.1 and Figure R403.4(2).

SECTION R404
FOUNDATION AND RETAINING WALLS

R404.1 Concrete and masonry foundation walls. Concrete foundation walls shall be selected and constructed in accordance with the provisions of Section R404.1.2. Masonry foundation walls shall be selected and constructed in accordance with the provisions of Section R404.1.1.

R404.1.1 Design of masonry foundation walls. Masonry foundation walls shall be designed and constructed in accordance with the provisions of this section or in accordance with the provisions of TMS 402/ACI 530/ASCE 5 or NCMA TR68-A. When TMS 402/ACI 530/ASCE 5, NCMA TR68-A or the provisions of this section are used to design masonry foundation walls, project drawings, typical details and specifications are not required to bear the seal of the architect or engineer responsible for design, unless otherwise required by the state law of the jurisdiction having authority.

R404.1.1.1 Masonry foundation walls. Concrete masonry and clay masonry foundation walls shall be constructed as set forth in Table R404.1.1(1), R404.1.1(2), R404.1.1(3) or R404.1.1(4) and shall also comply with applicable provisions of Sections R606, R607 and R608. In buildings assigned to Seismic Design Categories D_0, D_1 and D_2, concrete masonry and clay masonry foundation walls shall also comply with Section R404.1.4.1. Rubble stone masonry foundation walls shall be constructed in accordance with Sections R404.1.8 and R607.2.2. Rubble stone masonry walls shall not be used in Seismic Design Categories D_0, D_1 and D_2.

R404.1.2 Concrete foundation walls. Concrete foundation walls that support light-frame walls shall be designed and constructed in accordance with the provisions of this section, ACI 318, ACI 332 or PCA 100. Concrete foundation walls that support above-grade concrete walls that are within the applicability limits of Section R611.2 shall be designed and constructed in accordance with the provisions of this section, ACI 318, ACI 332 or PCA 100. Concrete foundation walls that support above-grade concrete walls that are not within the applicability limits of Section R611.2 shall be designed and constructed in accordance with the provisions of ACI 318, ACI 332 or PCA 100. When ACI 318, ACI 332, PCA 100 or the provisions of this section are used to design concrete foundation walls, project drawings, typical details and specifications are not required to bear the seal of the architect or engineer responsible for design, unless otherwise required by the state law of the jurisdiction having authority.

TABLE R403.4
MINIMUM DEPTH OF CRUSHED STONE FOOTINGS (D), (inches)

		LOAD-BEARING VALUE OF SOIL (psf)															
		1500				2000				3000				4000			
		MH, CH, CL, ML				SC, GC, SM, GM, SP, SW				GP, GW							
		Wall width (inches)				Wall width (inches)				Wall width (inches)				Wall width (inches)			
		6	8	10	12	6	8	10	12	6	8	10	12	6	8	10	12
Conventional light-frame construction																	
1-story	1100 plf	6	4	4	4	6	4	4	4	6	4	4	4	6	4	4	4
2-story	1800 plf	8	6	4	4	6	4	4	4	6	4	4	4	6	4	4	4
3-story	2900 plf	16	14	12	10	10	8	6	6	6	4	4	4	6	4	4	4
4-inch brick veneer over light-frame or 8-inch hollow concrete masonry																	
1-story	1500 plf	6	4	4	4	6	4	4	4	6	4	4	4	6	4	4	4
2-story	2700 plf	14	12	10	8	10	8	6	4	6	4	4	4	6	4	4	4
3-story	4000 plf	22	22	20	18	16	14	12	10	10	8	6	4	6	4	4	4
8-inch solid or fully grouted masonry																	
1-story	2000 plf	10	8	6	4	6	4	4	4	6	4	4	4	6	4	4	4
2-story	3600 plf	20	18	16	16	14	12	10	8	8	6	4	4	6	4	4	4
3-story	5300 plf	32	30	28	26	22	22	20	18	14	12	10	8	10	8	6	4

For SI: 1 inch = 25.4 mm, 1 plf = 14.6 N/m, 1 pound per square foot = 47.9 N/m^2.

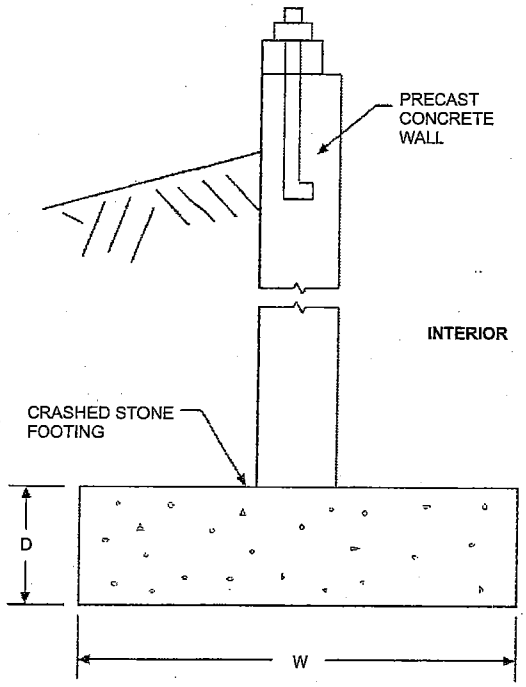

FIGURE R403.4(1)
BASEMENT OR CRAWL SPACE WITH PRECAST FOUNDATION WALL BEARING ON CRUSHED STONE

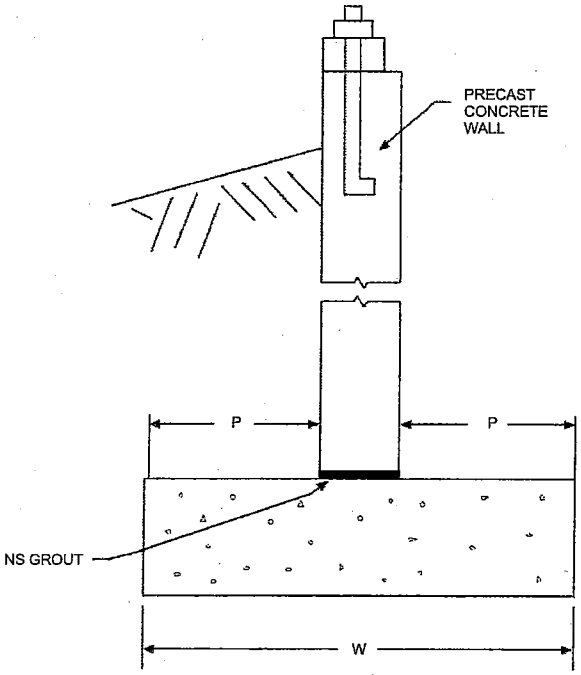

FIGURE R403.4(2)
BASEMENT OR CRAWL SPACE WITH PRECAST FOUNDATION WALL ON SPREAD FOOTING

R404.1.2.1 Concrete cross-section. Concrete walls constructed in accordance with this code shall comply with the shapes and minimum concrete cross-sectional dimensions required by Table R611.3. Other types of forming systems resulting in concrete walls not in compliance with this section and Table R611.3 shall be designed in accordance with ACI 318.

R404.1.2.2 Reinforcement for foundation walls. Concrete foundation walls shall be laterally supported at the top and bottom. Horizontal reinforcement shall be provided in accordance with Table R404.1.2(1). Vertical reinforcement shall be provided in accordance with Table R404.1.2(2), R404.1.2(3), R404.1.2(4), R404.1.2(5), R404.1.2(6), R404.1.2(7) or R404.1.2(8). Vertical reinforcement for flat basement walls retaining 4 feet (1219 mm) or more of unbalanced backfill is permitted to be determined in accordance with Table R404.1.2(9). For basement walls supporting above-grade concrete walls, vertical reinforcement shall be the greater of that required by Tables R404.1.2(2) through R404.1.2(8) or by Section R611.6 for the above-grade wall. In buildings assigned to Seismic Design Category D_0, D_1 or D_2, concrete foundation walls shall also comply with Section R404.1.4.2.

R404.1.2.2.1 Concrete foundation stem walls supporting above-grade concrete walls. Foundation stem walls that support above-grade concrete walls shall be designed and constructed in accordance with this section.

1. Stem walls not laterally supported at top. Concrete stem walls that are not monolithic with slabs-on-ground or are not otherwise laterally supported by slabs-on-ground shall comply with this section. Where unbalanced backfill retained by the stem wall is less than or equal to 18 inches (457 mm), the stem wall and above-grade wall it supports shall be provided with vertical reinforcement in accordance with Section R611.6 and Table R611.6(1), R611.6(2) or R611.6(3) for above-grade walls. Where unbalanced backfill retained by the stem wall is greater than 18 inches (457 mm), the stem wall and above-grade wall it supports shall be provided with vertical reinforcement in accordance with Section R611.6 and Table R611.6(4).
2. Stem walls laterally supported at top. Concrete stem walls that are monolithic with slabs-on-ground or are otherwise laterally supported by slabs-on-ground shall be vertically reinforced in accordance with Section R611.6 and Table R611.6(1), R611.6(2) or R611.6(3) for above-grade walls. Where the unbalanced backfill retained by the stem wall is greater than 18 inches (457 mm), the connection between the stem wall and the slab-on-ground, and the portion of the slab-on-ground providing lateral support for the wall shall be designed in accordance with PCA 100 or in accordance with accepted engineering practice. Where the unbalanced backfill retained by the stem wall is greater than 18 inches (457 mm), the minimum nominal thickness of the wall shall be 6 inches (152 mm).

TABLE R404.1.1(1)
PLAIN MASONRY FOUNDATION WALLS

MAXIMUM WALL HEIGHT (feet)	MAXIMUM UNBALANCED BACKFILL HEIGHT[c] (feet)	PLAIN MASONRY[a] MINIMUM NOMINAL WALL THICKNESS (inches)		
		Soil classes[b]		
		GW, GP, SW and SP	GM, GC, SM, SM-SC and ML	SC, MH, ML-CL and inorganic CL
5	4	6 solid[d] or 8	6 solid[d] or 8	6 solid[d] or 8
	5	6 solid[d] or 8	8	10
6	4	6 solid[d] or 8	6 solid[d] or 8	6 solid[d] or 8
	5	6 solid[d] or 8	8	10
	6	8	10	12
7	4	6 solid[d] or 8	8	8
	5	6 solid[d] or 8	10	10
	6	10	12	10 solid[d]
	7	12	10 solid[d]	12 solid[d]
8	4	6 solid[d] or 8	6 solid[d] or 8	8
	5	6 solid[d] or 8	10	12
	6	10	12	12 solid[d]
	7	12	12 solid[d]	Footnote e
	8	10 solid[d]	12 solid[d]	Footnote e
9	4	6 solid[d] or 8	6 solid[d] or 8	8
	5	8	10	12
	6	10	12	12 solid[d]
	7	12	12 solid[d]	Footnote e
	8	12 solid[d]	Footnote e	Footnote e
	9	Footnote e	Footnote e	Footnote e

For SI: 1 inch = 25.4 mm, 1 foot = 304.8 mm, 1 pound per square inch = 6.895 Pa.

a. Mortar shall be Type M or S and masonry shall be laid in running bond. Ungrouted hollow masonry units are permitted except where otherwise indicated.

b. Soil classes are in accordance with the Unified Soil Classification System. Refer to Table R405.1.

c. Unbalanced backfill height is the difference in height between the exterior finish ground level and the lower of the top of the concrete footing that supports the foundation wall or the interior finish ground level. Where an interior concrete slab-on-grade is provided and is in contact with the interior surface of the foundation wall, measurement of the unbalanced backfill height from the exterior finish ground level to the top of the interior concrete slab is permitted.

d. Solid grouted hollow units or solid masonry units.

e. Wall construction shall be in accordance with either Table R404.1.1(2), Table R404.1.1(3), Table R404.1.1(4), or a design shall be provided.

TABLE R404.1.1(2)
8-INCH MASONRY FOUNDATION WALLS WITH REINFORCING WHERE d > 5 INCHES[a, c]

WALL HEIGHT	HEIGHT OF UNBALANCED BACKFILL[e]	MINIMUM VERTICAL REINFORCEMENT AND SPACING (INCHES)[b, c]		
		Soil classes and lateral soil load[d] (psf per foot below grade)		
		GW, GP, SW and SP soils 30	GM, GC, SM, SM-SC and ML soils 45	SC, ML-CL and inorganic CL soils 60
6 feet 8 inches	4 feet (or less)	#4 at 48	#4 at 48	#4 at 48
	5 feet	#4 at 48	#4 at 48	#4 at 48
	6 feet 8 inches	#4 at 48	#5 at 48	#6 at 48
7 feet 4 inches	4 feet (or less)	#4 at 48	#4 at 48	#4 at 48
	5 feet	#4 at 48	#4 at 48	#4 at 48
	6 feet	#4 at 48	#5 at 48	#5 at 48
	7 feet 4 inches	#5 at 48	#6 at 48	#6 at 40
8 feet	4 feet (or less)	#4 at 48	#4 at 48	#4 at 48
	5 feet	#4 at 48	#4 at 48	#4 at 48
	6 feet	#4 at 48	#5 at 48	#5 at 48
	7 feet	#5 at 48	#6 at 48	#6 at 40
	8 feet	#5 at 48	#6 at 48	#6 at 32
8 feet 8 inches	4 feet (or less)	#4 at 48	#4 at 48	#4 at 48
	5 feet	#4 at 48	#4 at 48	#5 at 48
	6 feet	#4 at 48	#5 at 48	#6 at 48
	7 feet	#5 at 48	#6 at 48	#6 at 40
	8 feet 8 inches	#6 at 48	#6 at 32	#6 at 24
9 feet 4 inches	4 feet (or less)	#4 at 48	#4 at 48	#4 at 48
	5 feet	#4 at 48	#4 at 48	#5 at 48
	6 feet	#4 at 48	#5 at 48	#6 at 48
	7 feet	#5 at 48	#6 at 48	#6 at 40
	8 feet	#6 at 48	#6 at 40	#6 at 24
	9 feet 4 inches	#6 at 40	#6 at 24	#6 at 16
10 feet	4 feet (or less)	#4 at 48	#4 at 48	#4 at 48
	5 feet	#4 at 48	#4 at 48	#5 at 48
	6 feet	#4 at 48	#5 at 48	#6 at 48
	7 feet	#5 at 48	#6 at 48	#6 at 32
	8 feet	#6 at 48	#6 at 32	#6 at 24
	9 feet	#6 at 40	#6 at 24	#6 at 16
	10 feet	#6 at 32	#6 at 16	#6 at 16

For SI: 1 inch = 25.4 mm, 1 foot = 304.8 mm, 1 pound per square foot per foot = 0.157 kPa/mm.

a. Mortar shall be Type M or S and masonry shall be laid in running bond.

b. Alternative reinforcing bar sizes and spacings having an equivalent cross-sectional area of reinforcement per lineal foot of wall shall be permitted provided the spacing of the reinforcement does not exceed 72 inches.

c. Vertical reinforcement shall be Grade 60 minimum. The distance, *d*, from the face of the soil side of the wall to the center of vertical reinforcement shall be at least 5 inches.

d. Soil classes are in accordance with the Unified Soil Classification System and design lateral soil loads are for moist conditions without hydrostatic pressure. Refer to Table R405.1.

e. Unbalanced backfill height is the difference in height between the exterior finish ground level and the lower of the top of the concrete footing that supports the foundation wall or the interior finish ground level. Where an interior concrete slab-on-grade is provided and is in contact with the interior surface of the foundation wall, measurement of the unbalanced backfill height from the exterior finish ground level to the top of the interior concrete slab is permitted.

TABLE R404.1.1(3)
10-INCH MASONRY FOUNDATION WALLS WITH REINFORCING WHERE d > 6.75 INCHES[a, c]

WALL HEIGHT	HEIGHT OF UNBALANCED BACKFILL[e]	MINIMUM VERTICAL REINFORCEMENT AND SPACING (INCHES)[b, c]		
		Soil classes and later soil load[d] (psf per foot below grade)		
		GW, GP, SW and SP soils 30	GM, GC, SM, SM-SC and ML soils 45	SC, ML-CL and inorganic CL soils 60
6 feet 8 inches	4 feet (or less)	#4 at 56	#4 at 56	#4 at 56
	5 feet	#4 at 56	#4 at 56	#4 at 56
	6 feet 8 inches	#4 at 56	#5 at 56	#5 at 56
7 feet 4 inches	4 feet (or less)	#4 at 56	#4 at 56	#4 at 56
	5 feet	#4 at 56	#4 at 56	#4 at 56
	6 feet	#4 at 56	#4 at 56	#5 at 56
	7 feet 4 inches	#4 at 56	#5 at 56	#6 at 56
8 feet	4 feet (or less)	#4 at 56	#4 at 56	#4 at 56
	5 feet	#4 at 56	#4 at 56	#4 at 56
	6 feet	#4 at 56	#4 at 56	#5 at 56
	7 feet	#4 at 56	#5 at 56	#6 at 56
	8 feet	#5 at 56	#6 at 56	#6 at 48
8 feet 8 inches	4 feet (or less)	#4 at 56	#4 at 56	#4 at 56
	5 feet	#4 at 56	#4 at 56	#4 at 56
	6 feet	#4 at 56	#4 at 56	#5 at 56
	7 feet	#4 at 56	#5 at 56	#6 at 56
	8 feet 8 inches	#5 at 56	#6 at 48	#6 at 32
9 feet 4 inches	4 feet (or less)	#4 at 56	#4 at 56	#4 at 56
	5 feet	#4 at 56	#4 at 56	#4 at 56
	6 feet	#4 at 56	#5 at 56	#5 at 56
	7 feet	#4 at 56	#5 at 56	#6 at 56
	8 feet	#5 at 56	#6 at 56	#6 at 40
	9 feet 4 inches	#6 at 56	#6 at 40	#6 at 24
10 feet	4 feet (or less)	#4 at 56	#4 at 56	#4 at 56
	5 feet	#4 at 56	#4 at 56	#4 at 56
	6 feet	#4 at 56	#5 at 56	#5 at 56
	7 feet	#5 at 56	#6 at 56	#6 at 48
	8 feet	#5 at 56	#6 at 48	#6 at 40
	9 feet	#6 at 56	#6 at 40	#6 at 24
	10 feet	#6 at 48	#6 at 32	#6 at 24

For SI: 1 inch = 25.4 mm, 1 foot = 304.8 mm, 1 pound per square foot per foot = 0.157 kPa/mm.

a. Mortar shall be Type M or S and masonry shall be laid in running bond.

b. Alternative reinforcing bar sizes and spacings having an equivalent cross-sectional area of reinforcement per lineal foot of wall shall be permitted provided the spacing of the reinforcement does not exceed 72 inches.

c. Vertical reinforcement shall be Grade 60 minimum. The distance, *d*, from the face of the soil side of the wall to the center of vertical reinforcement shall be at least 6.75 inches.

d. Soil classes are in accordance with the Unified Soil Classification System and design lateral soil loads are for moist conditions without hydrostatic pressure. Refer to Table R405.1.

e. Unbalanced backfill height is the difference in height between the exterior finish ground level and the lower of the top of the concrete footing that supports the foundation wall or the interior finish ground level. Where an interior concrete slab-on-grade is provided and is in contact with the interior surface of the foundation wall, measurement of the unbalanced backfill height from the exterior finish ground level to the top of the interior concrete slab is permitted.

TABLE R404.1.1(4)
12-INCH MASONRY FOUNDATION WALLS WITH REINFORCING WHERE d > 8.75 INCHES[a, c]

WALL HEIGHT	HEIGHT OF UNBALANCED BACKFILL[e]	MINIMUM VERTICAL REINFORCEMENT AND SPACING (INCHES)[b, c]		
		Soil classes and lateral soil load[d] (psf per foot below grade)		
		GW, GP, SW and SP soils 30	GM, GC, SM, SM-SC and ML soils 45	SC, ML-CL and inorganic CL soils 60
6 feet 8 inches	4 feet (or less)	#4 at 72	#4 at 72	#4 at 72
	5 feet	#4 at 72	#4 at 72	#4 at 72
	6 feet 8 inches	#4 at 72	#4 at 72	#5 at 72
7 feet 4 inches	4 feet (or less)	#4 at 72	#4 at 72	#4 at 72
	5 feet	#4 at 72	#4 at 72	#4 at 72
	6 feet	#4 at 72	#4 at 72	#5 at 72
	7 feet 4 inches	#4 at 72	#5 at 72	#6 at 72
8 feet	4 feet (or less)	#4 at 72	#4 at 72	#4 at 72
	5 feet	#4 at 72	#4 at 72	#4 at 72
	6 feet	#4 at 72	#4 at 72	#5 at 72
	7 feet	#4 at 72	#5 at 72	#6 at 72
	8 feet	#5 at 72	#6 at 72	#6 at 64
8 feet 8 inches	4 feet (or less)	#4 at 72	#4 at 72	#4 at 72
	5 feet	#4 at 72	#4 at 72	#4 at 72
	6 feet	#4 at 72	#4 at 72	#5 at 72
	7 feet	#4 at 72	#5 at 72	#6 at 72
	8 feet 8 inches	#5 at 72	#7 at 72	#6 at 48
9 feet 4 inches	4 feet (or less)	#4 at 72	#4 at 72	#4 at 72
	5 feet	#4 at 72	#4 at 72	#4 at 72
	6 feet	#4 at 72	#5 at 72	#5 at 72
	7 feet	#4 at 72	#5 at 72	#6 at 72
	8 feet	#5 at 72	#6 at 72	#6 at 56
	9 feet 4 inches	#6 at 72	#6 at 48	#6 at 40
10 feet	4 feet (or less)	#4 at 72	#4 at 72	#4 at 72
	5 feet	#4 at 72	#4 at 72	#4 at 72
	6 feet	#4 at 72	#5 at 72	#5 at 72
	7 feet	#4 at 72	#6 at 72	#6 at 72
	8 feet	#5 at 72	#6 at 72	#6 at 48
	9 feet	#6 at 72	#6 at 56	#6 at 40
	10 feet	#6 at 64	#6 at 40	#6 at 32

For SI: 1 inch = 25.4 mm, 1 foot = 304.8 mm, 1 pound per square foot per foot = 0.157 kPa/mm.

a. Mortar shall be Type M or S and masonry shall be laid in running bond.

b. Alternative reinforcing bar sizes and spacings having an equivalent cross-sectional area of reinforcement per lineal foot of wall shall be permitted provided the spacing of the reinforcement does not exceed 72 inches.

c. Vertical reinforcement shall be Grade 60 minimum. The distance, *d*, from the face of the soil side of the wall to the center of vertical reinforcement shall be at least 8.75 inches.

d. Soil classes are in accordance with the Unified Soil Classification System and design lateral soil loads are for moist conditions without hydrostatic pressure. Refer to Table R405.1.

e. Unbalanced backfill height is the difference in height between the exterior finish ground level and the lower of the top of the concrete footing that supports the foundation wall or the interior finish ground levels. Where an interior concrete slab-on-grade is provided and in contact with the interior surface of the foundation wall, measurement of the unbalanced backfill height is permitted to be measured from the exterior finish ground level to the top of the interior concrete slab is permitted.

TABLE R404.1.2(1)
MINIMUM HORIZONTAL REINFORCEMENT FOR CONCRETE BASEMENT WALLS[a, b]

MAXIMUM UNSUPPORTED HEIGHT OF BASEMENT WALL (feet)	LOCATION OF HORIZONTAL REINFORCEMENT
≤ 8	One No. 4 bar within 12 inches of the top of the wall story and one No. 4 bar near mid-height of the wall story.
> 8	One No. 4 bar within 12 inches of the top of the wall story and one No. 4 bar near third points in the wall story.

For SI: 1 inch = 25.4 mm, 1 foot = 304.8 mm, 1 pound per square inch = 6.895 kPa.

a. Horizontal reinforcement requirements are for reinforcing bars with a minimum yield strength of 40,000 psi and concrete with a minimum concrete compressive strength 2,500 psi.

b. See Section R404.1.2.2 for minimum reinforcement required for foundation walls supporting above-grade concrete walls.

R404.1.2.2.2 Concrete foundation stem walls supporting light-frame above-grade walls. Concrete foundation stem walls that support light-frame above-grade walls shall be designed and constructed in accordance with this section.

1. Stem walls not laterally supported at top. Concrete stem walls that are not monolithic with slabs-on-ground or are not otherwise laterally supported by slabs-on-ground and retain 48 inches (1219 mm) or less of unbalanced fill, measured from the top of the wall, shall be constructed in accordance with Section R404.1.2. Foundation stem walls that retain more than 48 inches (1219 mm) of unbalanced fill, measured from the top of the wall, shall be designed in accordance with Sections R404.1.3 and R404.4.
2. Stem walls laterally supported at top. Concrete stem walls that are monolithic with slabs-on-ground or are otherwise laterally supported by slabs-on-ground shall be constructed in accordance with Section R404.1.2. Where the unbalanced backfill retained by the stem wall is greater than 48 inches (1219 mm), the connection between the stem wall and the slab-on-ground, and the portion of the slab-on-ground providing lateral support for the wall shall be designed in accordance with PCA 100 or in accordance with accepted engineering practice.

R404.1.2.3 Concrete, materials for concrete, and forms. Materials used in concrete, the concrete itself and forms shall conform to requirements of this section or ACI 318.

TABLE R404.1.2(2)
MINIMUM VERTICAL REINFORCEMENT FOR 6-INCH NOMINAL FLAT CONCRETE BASEMENT WALLS[b, c, d, e, g, h, i, j]

MAXIMUM UNSUPPORTED WALL HEIGHT (feet)	MAXIMUM UNBALANCED BACKFILL HEIGHT[f] (feet)	MINIMUM VERTICAL REINFORCEMENT-BAR SIZE AND SPACING (inches)		
		Soil classes[a] and design lateral soil (psf per foot of depth)		
		GW, GP, SW, SP 30	GM, GC, SM, SM-SC and ML 45	SC, ML-CL and inorganic CL 60
8	4	NR	NR	NR
	5	NR	6 @ 39	6 @ 48
	6	5 @ 39	6 @ 48	6 @ 35
	7	6 @ 48	6 @ 34	6 @ 25
	8	6 @ 39	6 @ 25	6 @ 18
9	4	NR	NR	NR
	5	NR	5 @ 37	6 @ 48
	6	5 @ 36	6 @ 44	6 @ 32
	7	6 @ 47	6 @ 30	6 @ 22
	8	6 @ 34	6 @ 22	6 @ 16
	9	6 @ 27	6 @ 17	DR
10	4	NR	NR	NR
	5	NR	5 @ 35	6 @ 48
	6	6 @ 48	6 @ 41	6 @ 30
	7	6 @ 43	6 @ 28	6 @ 20
	8	6 @ 31	6 @ 20	DR
	9	6 @ 24	6 @ 15	DR
	10	6 @ 19	DR	DR

For SI: 1 foot = 304.8 mm; 1 inch = 25.4 mm; 1 pound per square foot per foot = 0.1571 kPa^2/m, 1 pound per square inch = 6.895 kPa.

NR = Not required.

a. Soil classes are in accordance with the Unified Soil Classification System. Refer to Table R405.1.

b. Table values are based on reinforcing bars with a minimum yield strength of 60,000 psi concrete with a minimum specified compressive strength of 2,500 psi and vertical reinforcement being located at the centerline of the wall. See Section R404.1.2.3.7.2.

c. Vertical reinforcement with a yield strength of less than 60,000 psi and/or bars of a different size than specified in the table are permitted in accordance with Section R404.1.2.3.7.6 and Table R404.1.2(9).

d. Deflection criterion is $L/240$, where L is the height of the basement wall in inches.

e. Interpolation is not permitted.

f. Where walls will retain 4 feet or more of unbalanced backfill, they shall be laterally supported at the top and bottom before backfilling.

g. NR indicates no vertical wall reinforcement is required, except for 6-inch-nominal walls formed with stay-in-place forming systems in which case vertical reinforcement shall be No. 4@48 inches on center.

h. See Section R404.1.2.2 for minimum reinforcement required for basement walls supporting above-grade concrete walls.

i. See Table R611.3 for tolerance from nominal thickness permitted for flat walls.

j. DR means design is required in accordance with the applicable building code, or where there is no code, in accordance with ACI 318.

R404.1.2.3.1 Compressive strength. The minimum specified compressive strength of concrete, f'_c, shall comply with Section R402.2 and shall be not less than 2,500 psi (17.2 MPa) at 28 days in buildings assigned to Seismic Design Category A, B or C and 3000 psi (20.5 MPa) in buildings assigned to Seismic Design Category D_0, D_1 or D_2.

R404.1.2.3.2 Concrete mixing and delivery. Mixing and delivery of concrete shall comply with ASTM C 94 or ASTM C 685.

R404.1.2.3.3 Maximum aggregate size. The nominal maximum size of coarse aggregate shall not exceed one-fifth the narrowest distance between sides of forms, or three-fourths the clear spacing between reinforcing bars or between a bar and the side of the form.

Exception: When approved, these limitations shall not apply where removable forms are used and workability and methods of consolidation permit concrete to be placed without honeycombs or voids.

R404.1.2.3.4 Proportioning and slump of concrete. Proportions of materials for concrete shall be established to provide workability and consistency to permit concrete to be worked readily into forms and around reinforcement under conditions of placement to be employed, without segregation or excessive bleeding. Slump of concrete placed in removable forms shall not exceed 6 inches (152 mm).

Exception: When approved, the slump is permitted to exceed 6 inches (152 mm) for concrete mixtures that are resistant to segregation, and are in accordance with the form manufacturer's recommendations.

TABLE R404.1.2(3)
MINIMUM VERTICAL REINFORCEMENT FOR 8-INCH (203 mm) NOMINAL FLAT CONCRETE BASEMENT WALLS[b, c, d, e, f, h, i]

MAXIMUM UNSUPPORTED WALL HEIGHT (feet)	MAXIMUM UNBALANCED BACKFILL HEIGHT[g] (feet)	MINIMUM VERTICAL REINFORCEMENT-BAR SIZE AND SPACING (inches)		
		Soil classes[a] and design lateral soil (psf per foot of depth)		
		GW, GP, SW, SP 30	GM, GC, SM, SM-SC and ML 45	SC, ML-CL and inorganic CL 60
8	4	NR	NR	NR
	5	NR	NR	NR
	6	NR	NR	6 @ 37
	7	NR	6 @ 36	6 @ 35
	8	6 @ 41	6 @ 35	6 @ 26
9	4	NR	NR	NR
	5	NR	NR	NR
	6	NR	NR	6 @ 35
	7	NR	6 @ 35	6 @ 32
	8	6 @ 36	6 @ 32	6 @ 23
	9	6 @ 35	6 @ 25	6 @ 18
10	4	NR	NR	NR
	5	NR	NR	NR
	6	NR	NR	6 @ 35
	7	NR	6 @ 35	6 @ 29
	8	6 @ 35	6 @ 29	6 @ 21
	9	6 @ 34	6 @ 22	6 @ 16
	10	6 @ 27	6 @ 17	6 @ 13

For SI: 1 foot = 304.8 mm; 1 inch = 25.4 mm; 1 pound per square foot per foot = 0.1571 kPa^2/m, 1 pound per square inch = 6.895 kPa.
NR = Not required.

a. Soil classes are in accordance with the Unified Soil Classification System. Refer to Table R405.1.
b. Table values are based on reinforcing bars with a minimum yield strength of 60,000 psi, concrete with a minimum specified compressive strength of 2,500 psi and vertical reinforcement being located at the centerline of the wall. See Section R404.1.2.3.7.2.
c. Vertical reinforcement with a yield strength of less than 60,000 psi and/or bars of a different size than specified in the table are permitted in accordance with Section R404.1.2.3.7.6 and Table R404.1.2(9).
d. NR indicates no vertical reinforcement is required.
e. Deflection criterion is $L/240$, where L is the height of the basement wall in inches.
f. Interpolation is not permitted.
g. Where walls will retain 4 feet or more of unbalanced backfill, they shall be laterally supported at the top and bottom before backfilling.
h. See Section R404.1.2.2 for minimum reinforcement required for basement walls supporting above-grade concrete walls.
i. See Table R611.3 for tolerance from nominal thickness permitted for flat walls.

Slump of concrete placed in stay-in-place forms shall exceed 6 inches (152 mm). Slump of concrete shall be determined in accordance with ASTM C 143.

R404.1.2.3.5 Consolidation of concrete. Concrete shall be consolidated by suitable means during placement and shall be worked around embedded items and reinforcement and into corners of forms. Where stay-in-place forms are used, concrete shall be consolidated by internal vibration.

Exception: When approved for concrete to be placed in stay-in-place forms, self-consolidating concrete mixtures with slumps equal to or greater than 8 inches (203 mm) that are specifically designed for placement without internal vibration need not be internally vibrated.

R404.1.2.3.6 Form materials and form ties. Forms shall be made of wood, steel, aluminum, plastic, a composite of cement and foam insulation, a composite of cement and wood chips, or other approved material suitable for supporting and containing concrete. Forms shall provide sufficient strength to contain concrete during the concrete placement operation.

Form ties shall be steel, solid plastic, foam plastic, a composite of cement and wood chips, a composite of cement and foam plastic, or other suitable material capable of resisting the forces created by fluid pressure of fresh concrete.

R404.1.2.3.6.1 Stay-in-place forms. Stay-in-place concrete forms shall comply with this section.

1. Surface burning characteristics. The flame-spread index and smoke-developed index of forming material, other than foam plastic, left exposed on the interior shall com-

TABLE R404.1.2(4)
MINIMUM VERTICAL REINFORCEMENT FOR 10-INCH NOMINAL FLAT CONCRETE BASEMENT WALLS[b, c, d, e, f, h, i]

MAXIMUM UNSUPPORTED WALL HEIGHT (feet)	MAXIMUM UNBALANCED BACKFILL HEIGHT[g] (feet)	MINIMUM VERTICAL REINFORCEMENT-BAR SIZE AND SPACING (inches)		
		Soil classes[a] and design lateral soil (psf per foot of depth)		
		GW, GP, SW, SP 30	GM, GC, SM, SM-SC and ML 45	SC, ML-CL and inorganic CL 60
8	4	NR	NR	NR
	5	NR	NR	NR
	6	NR	NR	NR
	7	NR	NR	NR
	8	6 @ 48	6 @ 35	6 @ 28
9	4	NR	NR	NR
	5	NR	NR	NR
	6	NR	NR	NR
	7	NR	NR	6 @ 31
	8	NR	6 @ 31	6 @ 28
	9	6 @ 37	6 @ 28	6 @ 24
10	4	NR	NR	NR
	5	NR	NR	NR
	6	NR	NR	NR
	7	NR	NR	6 @ 28
	8	NR	6 @ 28	6 @ 28
	9	6 @ 33	6 @ 28	6 @ 21
	10	6 @ 28	6 @ 23	6 @ 17

For SI: 1 foot = 304.8 mm; 1 inch = 25.4 mm; 1 pound per square foot per foot = 0.1571 kPa^2/m, 1 pound per square inch = 6.895 kPa.

NR = Not required.

a. Soil classes are in accordance with the Unified Soil Classification System. Refer to Table R405.1.

b. Table values are based on reinforcing bars with a minimum yield strength of 60,000 psi concrete with a minimum specified compressive strength of 2,500 psi and vertical reinforcement being located at the centerline of the wall. See Section R404.1.2.3.7.2.

c. Vertical reinforcement with a yield strength of less than 60,000 psi and/or bars of a different size than specified in the table are permitted in accordance with Section R404.1.2.3.7.6 and Table R404.1.2(9).

d. NR indicates no vertical reinforcement is required.

e. Deflection criterion is $L/240$, where L is the height of the basement wall in inches.

f. Interpolation is not permitted.

g. Where walls will retain 4 feet or more of unbalanced backfill, they shall be laterally supported at the top and bottom before backfilling.

h. See Section R404.1.2.2 for minimum reinforcement required for basement walls supporting above-grade concrete walls.

i. See Table R611.3 for tolerance from nominal thickness permitted for flat walls.

ply with Section R302. The surface burning characteristics of foam plastic used in insulating concrete forms shall comply with Section R316.3.

2. Interior covering. Stay-in-place forms constructed of rigid foam plastic shall be protected on the interior of the building as required by Section R316. Where gypsum board is used to protect the foam plastic, it shall be installed with a mechanical fastening system. Use of adhesives in addition to mechanical fasteners is permitted.
3. Exterior wall covering. Stay-in-place forms constructed of rigid foam plastics shall be protected from sunlight and physical damage by the application of an approved exterior wall covering complying with this code. Exterior surfaces of other stay-in-place forming systems shall be protected in accordance with this code.
4. Termite hazards. In areas where hazard of termite damage is very heavy in accordance with Figure R301.2(6), foam plastic insulation shall be permitted below grade on foundation walls in accordance with one of the following conditions:
   4.1. Where in addition to the requirements in Section R318.1, an approved method of protecting the foam plastic and structure from subterranean termite damage is provided.
   4.2. The structural members of walls, floors, ceilings and roofs are entirely of noncombustible materials or pressure-preservative-treated wood.
   4.3. On the interior side of basement walls.
5. Flat ICF wall system forms shall conform to ASTM E 2634.

TABLE R404.1.2(5)
MINIMUM VERTICAL WALL REINFORCEMENT FOR 6-INCH WAFFLE-GRID BASEMENT WALLS[b, c, d, e, g, h, i]

MAXIMUM UNSUPPORTED WALL HEIGHT (feet)	MAXIMUM UNBALANCED BACKFILL HEIGHT[f] (feet)	MINIMUM VERTICAL REINFORCEMENT-BAR SIZE AND SPACING (inches)		
		Soil classes[a] and design lateral soil (psf per foot of depth)		
		GW, GP, SW, SP 30	GM, GC, SM, SM-SC and ML 45	SC, ML-CL and inorganic CL 60
8	4	4 @ 48	4 @ 46	6 @ 39
	5	4 @ 45	5 @ 46	6 @ 47
	6	5 @ 45	6 @ 40	DR
	7	6 @ 44	DR	DR
	8	6 @ 32	DR	DR
9	4	4 @ 48	4 @ 46	4 @ 37
	5	4 @ 42	5 @ 43	6 @ 44
	6	5 @ 41	6 @ 37	DR
	7	6 @ 39	DR	DR
	> 8	DR[i]	DR	DR
10	4	4 @ 48	4 @ 46	4 @ 35
	5	4 @ 40	5 @ 40	6 @ 41
	6	5 @ 38	6 @ 34	DR
	7	6 @ 36	DR	DR
	> 8	DR	DR	DR

For SI: 1 foot = 304.8 mm; 1 inch = 25.4 mm; 1 pound per square foot per foot = 0.1571 kPa^2/m, 1 pound per square inch = 6.895 kPa.

a. Soil classes are in accordance with the Unified Soil Classification System. Refer to Table R405.1.

b. Table values are based on reinforcing bars with a minimum yield strength of 60,000 psi concrete with a minimum specified compressive strength of 2,500 psi and vertical reinforcement being located at the centerline of the wall. See Section R404.1.2.3.7.2.

c. Maximum spacings shown are the values calculated for the specified bar size. Where the bar used is Grade 60 and the size specified in the table, the actual spacing in the wall shall not exceed a whole-number multiple of 12 inches (i.e., 12, 24, 36 and 48) that is less than or equal to the tabulated spacing. Vertical reinforcement with a yield strength of less than 60,000 psi and/or bars of a different size than specified in the table are permitted in accordance with Section R404.1.2.3.7.6 and Table R404.1.2(9).

d. Deflection criterion is $L/240$, where L is the height of the basement wall in inches.

e. Interpolation is not permitted.

f. Where walls will retain 4 feet or more of unbalanced backfill, they shall be laterally supported at the top and bottom before backfilling.

g. See Section R404.1.2.2 for minimum reinforcement required for basement walls supporting above-grade concrete walls.

h. See Table R611.3 for thicknesses and dimensions of waffle-grid walls.

i. DR means design is required in accordance with the applicable building code, or where there is no code, in accordance with ACI 318.

R404.1.2.3.7 Reinforcement.

R404.1.2.3.7.1 Steel reinforcement. Steel reinforcement shall comply with the requirements of ASTM A 615, A 706, or A 996. ASTM A 996 bars produced from rail steel shall be Type R. In buildings assigned to Seismic Design Category A, B or C, the minimum yield strength of reinforcing steel shall be 40,000 psi (Grade 40) (276 MPa). In buildings assigned to Seismic Design Category D_0, D_1 or D_2, reinforcing steel shall comply with the requirements of ASTM A 706 for low-alloy steel with a minimum yield strength of 60,000 psi (Grade 60) (414 MPa).

R404.1.2.3.7.2 Location of reinforcement in wall. The center of vertical reinforcement in basement walls determined from Tables R404.1.2(2) through R404.1.2(7) shall be located at the centerline of the wall. Vertical reinforcement in basement walls determined from Table R404.1.2(8) shall be located to provide a maximum cover of 1.25 inches (32 mm) measured from the inside face of the wall. Regardless of the table used to determine vertical wall reinforcement, the center of the steel shall not vary from the specified location by more than the greater of 10 percent of the wall thickness and $^3/_8$-inch (10 mm). Horizontal and vertical reinforcement shall be located in foundation walls to provide the minimum cover required by Section R404.1.2.3.7.4.

TABLE R404.1.2(6)
MINIMUM VERTICAL REINFORCEMENT FOR 8-INCH WAFFLE-GRID BASEMENT WALLS[b, c, d, e, f, h, i, j]

MAXIMUM UNSUPPORTED WALL HEIGHT (feet)	MAXIMUM UNBALANCED BACKFILL HEIGHT[g] (feet)	MINIMUM VERTICAL REINFORCEMENT-BAR SIZE AND SPACING (inches)		
		Soil classes[a] and design lateral soil (psf per foot of depth)		
		GW, GP, SW, SP 30	GM, GC, SM, SM-SC and ML 45	SC, ML-CL and inorganic CL 60
8	4	NR	NR	NR
	5	NR	5 @ 48	5 @ 46
	6	5 @ 48	5 @ 43	6 @ 45
	7	5 @ 46	6 @ 43	6 @ 31
	8	6 @ 48	6 @ 32	6 @ 23
9	4	NR	NR	NR
	5	NR	5 @ 47	5 @ 46
	6	5 @ 46	5 @ 39	6 @ 41
	7	5 @ 42	6 @ 38	6 @ 28
	8	6 @ 44	6 @ 28	6 @ 20
	9	6 @ 34	6 @ 21	DR
10	4	NR	NR	NR
	5	NR	5 @ 46	5 @ 44
	6	5 @ 46	5 @ 37	6 @ 38
	7	5 @ 38	6 @ 35	6 @ 25
	8	6 @ 39	6 @ 25	DR
	9	6 @ 30	DR	DR
	10	6 @ 24	DR	DR

For SI: 1 foot = 304.8 mm; 1 inch = 25.4 mm; 1 pound per square foot per foot = 0.1571 kPa^2/m, 1 pound per square inch = 6.895 kPa.

NR = Not required.

a. Soil classes are in accordance with the Unified Soil Classification System. Refer to Table R405.1.

b. Table values are based on reinforcing bars with a minimum yield strength of 60,000 psi concrete with a minimum specified compressive strength of 2,500 psi and vertical reinforcement being located at the centerline of the wall. See Section R404.1.2.3.7.2.

c. Maximum spacings shown are the values calculated for the specified bar size. Where the bar used is Grade 60 (420 MPa) and the size specified in the table, the actual spacing in the wall shall not exceed a whole-number multiple of 12 inches (i.e., 12, 24, 36 and 48) that is less than or equal to the tabulated spacing. Vertical reinforcement with a yield strength of less than 60,000 psi and/or bars of a different size than specified in the table are permitted in accordance with Section R404.1.2.3.7.6 and Table R404.1.2(9).

d. NR indicates no vertical reinforcement is required.

e. Deflection criterion is $L/240$, where L is the height of the basement wall in inches.

f. Interpolation shall not be permitted.

g. Where walls will retain 4 feet or more of unbalanced backfill, they shall be laterally supported at the top and bottom before backfilling.

h. See Section R404.1.2.2 for minimum reinforcement required for basement walls supporting above-grade concrete walls.

i. See Table R611.3 for thicknesses and dimensions of waffle-grid walls.

j. DR means design is required in accordance with the applicable building code, or where there is no code, in accordance with ACI 318.

R404.1.2.3.7.3 Wall openings. Vertical wall reinforcement required by Section R404.1.2.2 that is interrupted by wall openings shall have additional vertical reinforcement of the same size placed within 12 inches (305 mm) of each side of the opening.

R404.1.2.3.7.4 Support and cover. Reinforcement shall be secured in the proper location in the forms with tie wire or other bar support system to prevent displacement during the concrete placement operation. Steel reinforcement in concrete cast against the earth shall have a minimum cover of 3 inches (75 mm). Minimum cover for reinforcement in concrete cast in removable forms that will be exposed to the earth or weather shall be $1^1/_2$ inches (38 mm) for No. 5 bars and smaller, and 2 inches (50 mm) for No. 6 bars and larger. For concrete cast in removable forms that will not be exposed to the earth or weather, and for concrete cast in stay-in-place forms, minimum cover shall be $^3/_4$ inch (19 mm). The minus tolerance for cover shall not exceed the smaller of one-third the required cover or $^3/_8$ inch (10 mm).

R404.1.2.3.7.5 Lap splices. Vertical and horizontal wall reinforcement shall be the longest lengths practical. Where splices are necessary in reinforcement, the length of lap splice shall be in accordance with Table R611.5.4.(1) and Figure R611.5.4(1). The maximum gap between noncontact parallel bars at a lap splice shall not exceed the smaller of one-fifth the required lap length and 6 inches (152 mm). See Figure R611.5.4(1).

R404.1.2.3.7.6 Alternate grade of reinforcement and spacing. Where tables in Section R404.1.2.2 specify vertical wall reinforcement based on minimum bar size and maximum spacing, which are based on Grade 60 (414 MPa) steel reinforcement, different size bars and/or bars made from a different grade of steel are permitted provided an equivalent area of steel per linear foot of wall is provided. Use of Table

TABLE R404.1.2(7)
MINIMUM VERTICAL REINFORCEMENT FOR 6-INCH (152 mm) SCREEN-GRID BASEMENT WALLS[b, c, d, e, g, h, i]

MAXIMUM UNSUPPORTED WALL HEIGHT (feet)	MAXIMUM UNBALANCED BACKFILL HEIGHT[f] (feet)	MINIMUM VERTICAL REINFORCEMENT-BAR SIZE AND SPACING (inches)		
		Soil classes[a] and design lateral soil (psf per foot of depth)		
		GW, GP, SW, SP 30	GM, GC, SM, SM-SC and ML 45	SC, ML-CL and inorganic CL 60
8	4	4 @ 48	4 @ 48	5 @ 43
	5	4 @ 48	5 @ 48	5 @ 37
	6	5 @ 48	6 @ 45	6 @ 32
	7	6 @ 48	DR	DR
	8	6 @ 36	DR	DR
9	4	4 @ 48	4 @ 48	4 @ 41
	5	4 @ 48	5 @ 48	6 @ 48
	6	5 @ 45	6 @ 41	DR
	7	6 @ 43	DR	DR
	> 8	DR	DR	DR
10	4	4 @ 48	4 @ 48	4 @ 39
	5	4 @ 44	5 @ 44	6 @ 46
	6	5 @ 42	6 @ 38	DR
	7	6 @ 40	DR	DR
	> 8	DR	DR	DR

For SI: 1 foot = 304.8 mm; 1 inch = 25.4 mm; 1 pound per square foot per foot = 0.1571 kPa^2/m, 1 pound per square inch = 6.895 kPa.

a. Soil classes are in accordance with the Unified Soil Classification System. Refer to Table R405.1.

b. Table values are based on reinforcing bars with a minimum yield strength of 60,000 psi, concrete with a minimum specified compressive strength of 2,500 psi and vertical reinforcement being located at the centerline of the wall. See Section R404.1.2.3.7.2.

c. Maximum spacings shown are the values calculated for the specified bar size. Where the bar used is Grade 60 and the size specified in the table, the actual spacing in the wall shall not exceed a whole-number multiple of 12 inches (i.e., 12, 24, 36 and 48) that is less than or equal to the tabulated spacing. Vertical reinforcement with a yield strength of less than 60,000 psi and/or bars of a different size than specified in the table are permitted in accordance with Section R404.1.2.3.7.6 and Table R404.1.2(9).

d. Deflection criterion is $L/240$, where L is the height of the basement wall in inches.

e. Interpolation is not permitted.

f. Where walls will retain 4 feet or more of unbalanced backfill, they shall be laterally supported at the top and bottom before backfilling.

g. See Sections R404.1.2.2 for minimum reinforcement required for basement walls supporting above-grade concrete walls.

h. See Table R611.3 for thicknesses and dimensions of screen-grid walls.

i. DR means design is required in accordance with the applicable building code, or where there is no code, in accordance with ACI 318.

TABLE R404.1.2(8)
MINIMUM VERTICAL REINFORCEMENT FOR 6-, 8-, 10-INCH AND 12-INCH NOMINAL FLAT BASEMENT WALLS[b, c, d, e, f, h, i, k, n]

MAXIMUM WALL HEIGHT (feet)	MAXIMUM UNBALANCED BACKFILL HEIGHT[g] (feet)	MINIMUM VERTICAL REINFORCEMENT-BAR SIZE AND SPACING (inches)											
		Soil classes[a] and design lateral soil (psf per foot of depth)											
		GW, GP, SW, SP 30				GM, GC, SM, SM-SC and ML 45				SC, ML-CL and inorganic CL 60			
		Minimum nominal wall thickness (inches)											
		6	8	10	12	6	8	10	12	6	8	10	12
5	4	NR	NR	NR	NR	NR	NR	NR	NR	NR	NR	NR	NR
	5	NR	NR	NR	NR	NR	NR	NR	NR	NR	NR	NR	NR
6	4	NR	NR	NR	NR	NR	NR	NR	NR	NR	NR	NR	NR
	5	NR	NR	NR	NR	NR	NR[l]	NR	NR	4 @ 35	NR[l]	NR	NR
	6	NR	NR	NR	NR	5 @ 48	NR	NR	NR	5 @ 36	NR	NR	NR
7	4	NR	NR	NR	NR	NR	NR	NR	NR	NR	NR	NR	NR
	5	NR	NR	NR	NR	NR	NR	NR	NR	5 @ 47	NR	NR	NR
	6	NR	NR	NR	NR	5 @ 42	NR	NR	NR	6 @ 43	5 @ 48	NR[l]	NR
	7	5 @ 46	NR	NR	NR	6 @ 42	5 @ 46	NR[l]	NR	6 @ 34	6 @ 48	NR	NR
8	4	NR	NR	NR	NR	NR	NR	NR	NR	NR	NR	NR	NR
	5	NR	NR	NR	NR	4 @ 38	NR[l]	NR	NR	5 @ 43	NR	NR	NR
	6	4 @ 37	NR[l]	NR	NR	5 @ 37	NR	NR	NR	6 @ 37	5 @ 43	NR[l]	NR
	7	5 @ 40	NR	NR	NR	6 @ 37	5 @ 41	NR[l]	NR	6 @ 34	6 @ 43	NR	NR
	8	6 @ 43	5 @ 47	NR[l]	NR	6 @ 34	6 @ 43	NR	NR	6 @ 27	6 @ 32	6 @ 44	NR
9	4	NR	NR	NR	NR	NR	NR	NR	NR	NR	NR	NR	NR
	5	NR	NR	NR	NR	4 @ 35	NR[l]	NR	NR	5 @ 40	NR	NR	NR
	6	4 @ 34	NR[l]	NR	NR	6 @ 48	NR	NR	NR	6 @ 36	6 @ 39	NR[l]	NR
	7	5 @ 36	NR	NR	NR	6 @ 34	5 @ 37	NR	NR	6 @ 33	6 @ 38	5 @ 37	NR[l]
	8	6 @ 38	5 @ 41	NR[l]	NR	6 @ 33	6 @ 38	5 @ 37	NR[l]	6 @ 24	6 @ 29	6 @ 39	4 @ 48[m]
	9	6 @ 34	6 @ 46	NR	NR	6 @ 26	6 @ 30	6 @ 41	NR	6 @ 19	6 @ 23	6 @ 30	6 @ 39
10	4	NR	NR	NR	NR	NR	NR	NR	NR	NR	NR	NR	NR
	5	NR	NR	NR	NR	4 @ 33	NR[l]	NR	NR	5 @ 38	NR	NR	NR
	6	5 @ 48	NR[l]	NR	NR	6 @ 45	NR	NR	NR	6 @ 34	5 @ 37	NR	NR
	7	6 @ 47	NR	NR	NR	6 @ 34	6 @ 48	NR	NR	6 @ 30	6 @ 35	6 @ 48	NR[l]
	8	6 @ 34	5 @ 38	NR	NR	6 @ 30	6 @ 34	6 @ 47	NR[l]	6 @ 22	6 @ 26	6 @ 35	6 @ 45[m]
	9	6 @ 34	6 @ 41	4 @ 48	NR[l]	6 @ 23	6 @ 27	6 @ 35	4 @ 48[m]	DR	6 @ 22	6 @ 27	6 @ 34
	10	6 @ 28	6 @ 33	6 @ 45	NR	DR[j]	6 @ 23	6 @ 29	6 @ 38	DR	6 @ 22	6 @ 22	6 @ 28

For SI: 1 foot = 304.8 mm; 1 inch = 25.4 mm; 1 pound per square foot per foot = 0.1571 kPa²/m, 1 pound per square inch = 6.895 kPa.

NR = Not required.

a. Soil classes are in accordance with the Unified Soil Classification System. Refer to Table R405.1.

b. Table values are based on reinforcing bars with a minimum yield strength of 60,000 psi.

c. Vertical reinforcement with a yield strength of less than 60,000 psi and/or bars of a different size than specified in the table are permitted in accordance with Section R404.1.2.3.7.6 and Table R404.1.2(9).

d. NR indicates no vertical wall reinforcement is required, except for 6-inch nominal walls formed with stay-in-place forming systems in which case vertical reinforcement shall be #4@48 inches on center.

e. Allowable deflection criterion is $L/240$, where L is the unsupported height of the basement wall in inches.

f. Interpolation is not permitted.

g. Where walls will retain 4 feet or more of unbalanced backfill, they shall be laterally supported at the top and bottom before backfilling.

h. Vertical reinforcement shall be located to provide a cover of 1.25 inches measured from the inside face of the wall. The center of the steel shall not vary from the specified location by more than the greater of 10 percent of the wall thickness or $^3/_8$-inch.

i. Concrete cover for reinforcement measured from the inside face of the wall shall not be less than $^3/_4$-inch. Concrete cover for reinforcement measured from the outside face of the wall shall not be less than $1^1/_2$ inches for No. 5 bars and smaller, and not less than 2 inches for larger bars.

j. DR means design is required in accordance with the applicable building code, or where there is no code in accordance with ACI 318.

k. Concrete shall have a specified compressive strength, f'_c, of not less than 2,500 psi at 28 days, unless a higher strength is required by footnote l or m.

l. The minimum thickness is permitted to be reduced 2 inches, provided the minimum specified compressive strength of concrete, f'_c, is 4,000 psi.

m. A plain concrete wall with a minimum nominal thickness of 12 inches is permitted, provided minimum specified compressive strength of concrete, f'_c, is 3,500 psi.

n. See Table R611.3 for tolerance from nominal thickness permitted for flat walls.

TABLE R404.1.2(9)
MINIMUM SPACING FOR ALTERNATE BAR SIZE AND/OR ALTERNATE GRADE OF STEEL[a, b, c]

BAR SPACING FROM APPLICABLE TABLE IN SECTION R404.1.2.2 (inches)	BAR SIZE FROM APPLICABLE TABLE IN SECTION R404.1.2.2														
	#4					#5					#6				
	Alternate bar size and/or alternate grade of steel desired														
	Grade 60		Grade 40			Grade 60		Grade 40			Grade 60		Grade 40		
	#5	#6	#4	#5	#6	#4	#6	#4	#5	#6	#4	#5	#4	#5	#6
	Maximum spacing for alternate bar size and/or alternate grade of steel (inches)														
8	12	18	5	8	12	5	11	3	5	8	4	6	2	4	5
9	14	20	6	9	13	6	13	4	6	9	4	6	3	4	6
10	16	22	7	10	15	6	14	4	7	9	5	7	3	5	7
11	17	24	7	11	16	7	16	5	7	10	5	8	3	5	7
12	19	26	8	12	18	8	17	5	8	11	5	8	4	6	8
13	20	29	9	13	19	8	18	6	9	12	6	9	4	6	9
14	22	31	9	14	21	9	20	6	9	13	6	10	4	7	9
15	23	33	10	16	22	10	21	6	10	14	7	11	5	7	10
16	25	35	11	17	23	10	23	7	11	15	7	11	5	8	11
17	26	37	11	18	25	11	24	7	11	16	8	12	5	8	11
18	28	40	12	19	26	12	26	8	12	17	8	13	5	8	12
19	29	42	13	20	28	12	27	8	13	18	9	13	6	9	13
20	31	44	13	21	29	13	28	9	13	19	9	14	6	9	13
21	33	46	14	22	31	14	30	9	14	20	10	15	6	10	14
22	34	48	15	23	32	14	31	9	15	21	10	16	7	10	15
23	36	48	15	24	34	15	33	10	15	22	10	16	7	11	15
24	37	48	16	25	35	15	34	10	16	23	11	17	7	11	16
25	39	48	17	26	37	16	35	11	17	24	11	18	8	12	17
26	40	48	17	27	38	17	37	11	17	25	12	18	8	12	17
27	42	48	18	28	40	17	38	12	18	26	12	19	8	13	18
28	43	48	19	29	41	18	40	12	19	26	13	20	8	13	19
29	45	48	19	30	43	19	41	12	19	27	13	20	9	14	19
30	47	48	20	31	44	19	43	13	20	28	14	21	9	14	20
31	48	48	21	32	45	20	44	13	21	29	14	22	9	15	21
32	48	48	21	33	47	21	45	14	21	30	15	23	10	15	21
33	48	48	22	34	48	21	47	14	22	31	15	23	10	16	22
34	48	48	23	35	48	22	48	15	23	32	15	24	10	16	23
35	48	48	23	36	48	23	48	15	23	33	16	25	11	16	23
36	48	48	24	37	48	23	48	15	24	34	16	25	11	17	24
37	48	48	25	38	48	24	48	16	25	35	17	26	11	17	25
38	48	48	25	39	48	25	48	16	25	36	17	27	12	18	25
39	48	48	26	40	48	25	48	17	26	37	18	27	12	18	26
40	48	48	27	41	48	26	48	17	27	38	18	28	12	19	27
41	48	48	27	42	48	26	48	18	27	39	19	29	12	19	27
42	48	48	28	43	48	27	48	18	28	40	19	30	13	20	28
43	48	48	29	44	48	28	48	18	29	41	20	30	13	20	29
44	48	48	29	45	48	28	48	19	29	42	20	31	13	21	29
45	48	48	30	47	48	29	48	19	30	43	20	32	14	21	30
46	48	48	31	48	48	30	48	20	31	44	21	32	14	22	31
47	48	48	31	48	48	30	48	20	31	44	21	33	14	22	31
48	48	48	32	48	48	31	48	21	32	45	22	34	15	23	32

For SI: 1 inch = 25.4 mm, 1 pound per square inch = 6.895 kPa.

a. This table is for use with tables in Section R404.1.2.2 that specify the minimum bar size and maximum spacing of vertical wall reinforcement for foundation walls and above-grade walls. Reinforcement specified in tables in Sections R404.1.2.2 is based on Grade 60 steel reinforcement.

b. Bar spacing shall not exceed 48 inches on center and shall not be less than one-half the nominal wall thickness.

c. For Grade 50 steel bars (ASTM A 996, Type R), use spacing for Grade 40 bars or interpolate between Grades 40 and 60.

R404.1.2(9) is permitted to determine the maximum bar spacing for different bar sizes than specified in the tables and/or bars made from a different grade of steel. Bars shall not be spaced less than one-half the wall thickness, or more than 48 inches (1219 mm) on center.

R404.1.2.3.7.7 Standard hooks. Where reinforcement is required by this code to terminate with a standard hook, the hook shall comply with Section R611.5.4.5 and Figure R611.5.4(3).

R404.1.2.3.7.8 Construction joint reinforcement. Construction joints in foundation walls shall be made and located to not impair the strength of the wall. Construction joints in plain concrete walls, including walls required to have not less than No. 4 bars at 48 inches (1219 mm) on center by Sections R404.1.2.2 and R404.1.4.2, shall be located at points of lateral support, and a minimum of one No. 4 bar shall extend across the construction joint at a spacing not to exceed 24 inches (610 mm) on center. Construction joint reinforcement shall have a minimum of 12 inches (305 mm) embedment on both sides of the joint. Construction joints in reinforced concrete walls shall be located in the middle third of the span between lateral supports, or located and constructed as required for joints in plain concrete walls.

Exception: Use of vertical wall reinforcement required by this code is permitted in lieu of construction joint reinforcement provided the spacing does not exceed 24 inches (610 mm), or the combination of wall reinforcement and No.4 bars described above does not exceed 24 inches (610 mm).

R404.1.2.3.8 Exterior wall coverings. Requirements for installation of masonry veneer, stucco and other wall coverings on the exterior of concrete walls and other construction details not covered in this section shall comply with the requirements of this code.

R404.1.2.4 Requirements for Seismic Design Category C. Concrete foundation walls supporting above-grade concrete walls in townhouses assigned to Seismic Design Category C shall comply with ACI 318, ACI 332 or PCA 100 (see Section R404.1.2).

R404.1.3 Design required. Concrete or masonry foundation walls shall be designed in accordance with accepted engineering practice when either of the following conditions exists:

1. Walls are subject to hydrostatic pressure from groundwater.
2. Walls supporting more than 48 inches (1219 mm) of unbalanced backfill that do not have permanent lateral support at the top or bottom.

R404.1.4 Seismic Design Category D_0, D_1 or D_2.

R404.1.4.1 Masonry foundation walls. In addition to the requirements of Table R404.1.1(1) plain masonry foundation walls in buildings assigned to Seismic Design Category D_0, D_1 or D_2, as established in Table R301.2(1), shall comply with the following.

1. Wall height shall not exceed 8 feet (2438 mm).
2. Unbalanced backfill height shall not exceed 4 feet (1219 mm).
3. Minimum nominal thickness for plain masonry foundation walls shall be 8 inches (203 mm).
4. Masonry stem walls shall have a minimum vertical reinforcement of one No. 3 (No. 10) bar located a maximum of 4 feet (1219 mm) on center in grouted cells. Vertical reinforcement shall be tied to the horizontal reinforcement in the footings.

Foundation walls in buildings assigned to Seismic Design Category D_0, D_1 or D_2, as established in Table R301.2(1), supporting more than 4 feet (1219 mm) of unbalanced backfill or exceeding 8 feet (2438 mm) in height shall be constructed in accordance with Table R404.1.1(2), R404.1.1(3) or R404.1.1(4). Masonry foundation walls shall have two No. 4 (No. 13) horizontal bars located in the upper 12 inches (305 mm) of the wall.

R404.1.4.2 Concrete foundation walls. In buildings assigned to Seismic Design Category D_0, D_1 or D_2, as established in Table R301.2(1), concrete foundation walls that support light-frame walls shall comply with this section, and concrete foundation walls that support above-grade concrete walls shall comply with ACI 318, ACI 332 or PCA 100 (see Section R404.1.2). In addition to the horizontal reinforcement required by Table R404.1.2(1), plain concrete walls supporting light-frame walls shall comply with the following.

1. Wall height shall not exceed 8 feet (2438 mm).
2. Unbalanced backfill height shall not exceed 4 feet (1219 mm).
3. Minimum thickness for plain concrete foundation walls shall be 7.5 inches (191 mm) except that 6 inches (152 mm) is permitted where the maximum wall height is 4 feet, 6 inches (1372 mm).

Foundation walls less than 7.5 inches (191 mm) in thickness, supporting more than 4 feet (1219 mm) of unbalanced backfill or exceeding 8 feet (2438 mm) in height shall be provided with horizontal reinforcement in accordance with Table R404.1.2(1), and vertical reinforcement in accordance with Table R404.1.2(2), R404.1.2(3), R404.1.2(4), R404.1.2(5), R404.1.2(6), R404.1.2(7) or R404.1.2(8). Where Tables R404.1.2(2) through R404.1.2(8) permit plain concrete walls, not less than No. 4 (No. 13) vertical bars at a spacing not exceeding 48 inches (1219 mm) shall be provided.

R404.1.5 Foundation wall thickness based on walls supported. The thickness of masonry or concrete foundation walls shall not be less than that required by Section R404.1.5.1 or R404.1.5.2, respectively.

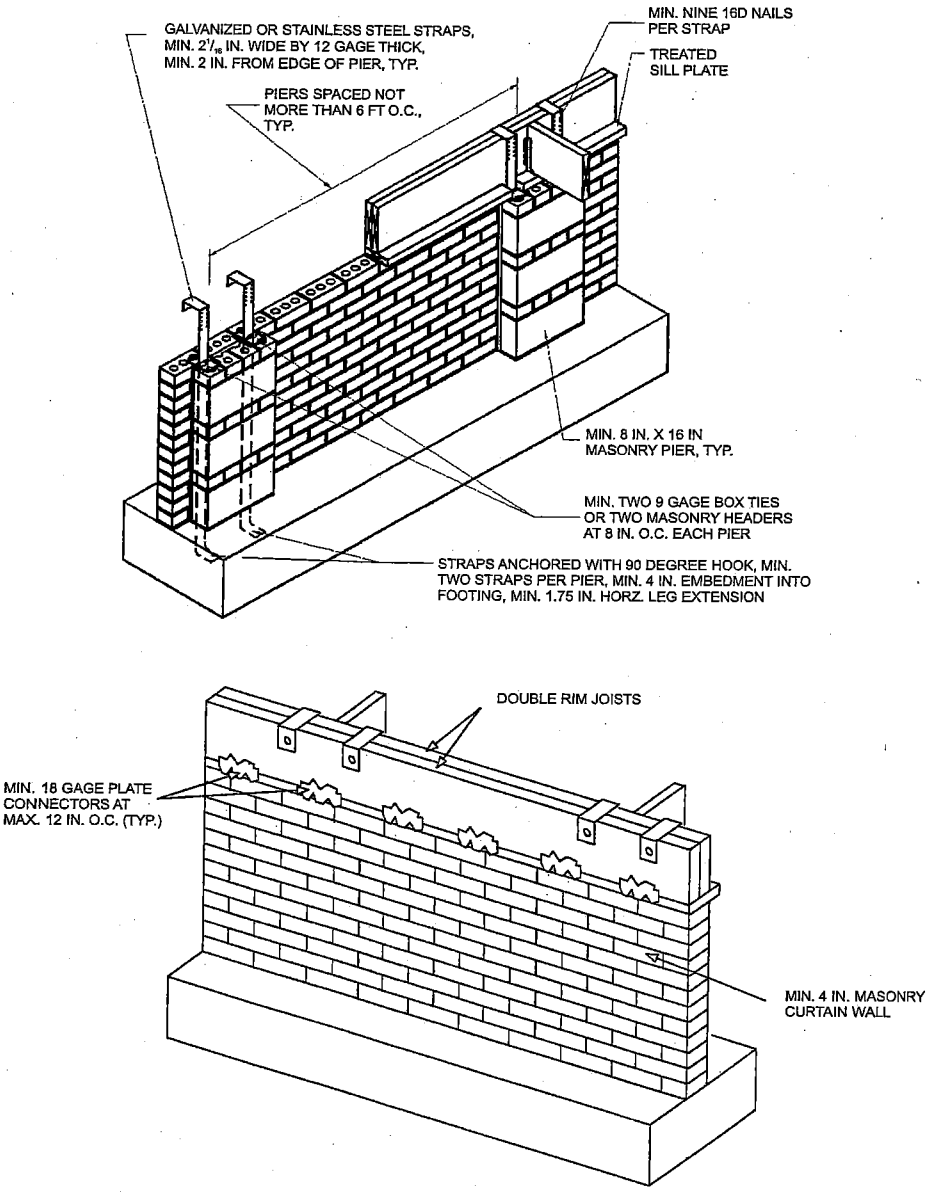

For SI: 1 inch = 25.4 mm, 1 foot = 304.8 mm, 1 degree = 0.0175 rad.

FIGURE R404.1.5(1)
FOUNDATION WALL CLAY MASONRY CURTAIN WALL WITH CONCRETE MASONRY PIERS

R404.1.5.1 Masonry wall thickness. Masonry foundation walls shall not be less than the thickness of the wall supported, except that masonry foundation walls of at least 8-inch (203 mm) nominal thickness shall be permitted under brick veneered frame walls and under 10-inch-wide (254 mm) cavity walls where the total height of the wall supported, including gables, is not more than 20 feet (6096 mm), provided the requirements of Section R404.1.1 are met.

R404.1.5.2 Concrete wall thickness. The thickness of concrete foundation walls shall be equal to or greater than the thickness of the wall in the story above. Concrete foundation walls with corbels, brackets or other projections built into the wall for support of masonry veneer or other purposes are not within the scope of the tables in this section.

Where a concrete foundation wall is reduced in thickness to provide a shelf for the support of masonry veneer, the reduced thickness shall be equal to or greater than the thickness of the wall in the story above. Vertical reinforcement for the foundation wall shall be based on Table R404.1.2(8) and located in the wall as required by Section R404.1.2.3.7.2 where that table is used. Vertical reinforcement shall be based on the thickness of the thinner portion of the wall.

Exception: Where the height of the reduced thickness portion measured to the underside of the floor assembly or sill plate above is less than or equal to 24 inches (610 mm) and the reduction in thickness does not exceed 4 inches (102 mm), the vertical reinforcement is permitted to be based on the thicker portion of the wall.

R404.1.5.3 Pier and curtain wall foundations. Use of pier and curtain wall foundations shall be permitted to support light-frame construction not more than two stories in height, provided the following requirements are met:

1. All load-bearing walls shall be placed on continuous concrete footings placed integrally with the exterior wall footings.
2. The minimum actual thickness of a load-bearing masonry wall shall be not less than 4 inches (102 mm) nominal or $3^3/_8$ inches (92 mm) actual thickness, and shall be bonded integrally with piers spaced in accordance with Section R606.9.
3. Piers shall be constructed in accordance with Section R606.6 and Section R606.6.1, and shall be bonded into the load-bearing masonry wall in accordance with Section R608.1.1 or R608.1.1.2.
4. The maximum height of a 4-inch (102 mm) load-bearing masonry foundation wall supporting wood-frame walls and floors shall not be more than 4 feet (1219 mm).
5. Anchorage shall be in accordance with Section R403.1.6, Figure R404.1.5(1), or as specified by engineered design accepted by the building official.
6. The unbalanced fill for 4-inch (102 mm) foundation walls shall not exceed 24 inches (610 mm) for solid masonry or 12 inches (305 mm) for hollow masonry.
7. In Seismic Design Categories D_0, D_1 and D_2, prescriptive reinforcement shall be provided in the horizontal and vertical direction. Provide minimum horizontal joint reinforcement of two No. 9 gage wires spaced not less than 6 inches (152 mm) or one $^1/_4$ inch (6.4 mm) diameter wire at 10 inches (254 mm) on center vertically. Provide minimum vertical reinforcement of one No. 4 bar at 48 inches (1220 mm) on center horizontally grouted in place.

R404.1.6 Height above finished grade. Concrete and masonry foundation walls shall extend above the finished grade adjacent to the foundation at all points a minimum of 4 inches (102 mm) where masonry veneer is used and a minimum of 6 inches (152 mm) elsewhere.

R404.1.7 Backfill placement. Backfill shall not be placed against the wall until the wall has sufficient strength and has been anchored to the floor above, or has been sufficiently braced to prevent damage by the backfill.

Exception: Bracing is not required for walls supporting less than 4 feet (1219 mm) of unbalanced backfill.

R404.1.8 Rubble stone masonry. Rubble stone masonry foundation walls shall have a minimum thickness of 16 inches (406 mm), shall not support an unbalanced backfill exceeding 8 feet (2438 mm) in height, shall not support a soil pressure greater than 30 pounds per square foot per foot (4.71 kPa/m), and shall not be constructed in Seismic Design Categories D_0, D_1, D_2 or townhouses in Seismic Design Category C, as established in Figure R301.2(2).

R404.1.9 Isolated masonry piers. Isolated masonry piers shall be constructed in accordance with this section and the general masonry construction requirements of Section R606. Hollow masonry piers shall have a minimum nominal thickness of 8 inches (203 mm), with a nominal height not exceeding four times the nominal thickness and a nominal length not exceeding three times the nominal thickness. Where hollow masonry units are solidly filled with concrete or grout, piers shall be permitted to have a nominal height not exceeding ten times the nominal thickness. Footings for isolated masonry piers shall be sized in accordance with Section R403.1.1.

R404.1.9.1 Pier cap. Hollow masonry piers shall be capped with 4 inches (102 mm) of solid masonry or concrete, a masonry cap block, or shall have cavities of the top course filled with concrete or grout. Where required, termite protection for the pier cap shall be provided in accordance with Section R318.

R404.1.9.2 Masonry piers supporting floor girders. Masonry piers supporting wood girders sized in accordance with Tables R502.5(1) and R502.5(2) shall be permitted in accordance with this section. Piers supporting girders for interior bearing walls shall have a minimum nominal dimension of 12 inches (305 mm) and a maximum height of 10 feet (3048 mm) from top of footing to bottom of sill plate or girder. Piers supporting girders for exterior bearing walls shall have a minimum nominal dimension of 12 inches (305 mm) and a maximum height of 4 feet (1220 mm) from top of footing to bottom of sill plate or girder. Girders and sill plates shall be anchored to the pier or footing in accordance with Section R403.1.6 or Figure R404.1.5(1). Floor girder bearing shall be in accordance with Section R502.6.

R404.1.9.3 Masonry piers supporting braced wall panels. Masonry piers supporting braced wall panels shall be designed in accordance with accepted engineering practice.

R404.1.9.4 Seismic design of masonry piers. Masonry piers in all dwellings located in Seismic Design Category D_0, D_1 or D_2, and townhouses in Seismic Design Category C, shall be designed in accordance with accepted engineering practice.

R404.1.9.5 Masonry piers in flood hazard areas. Masonry piers for dwellings in flood hazard areas shall be designed in accordance with Section R322.

R404.2 Wood foundation walls. Wood foundation walls shall be constructed in accordance with the provisions of Sections R404.2.1 through R404.2.6 and with the details shown in Figures R403.1(2) and R403.1(3).

R404.2.1 Identification. All load-bearing lumber shall be identified by the grade mark of a lumber grading or inspection agency which has been approved by an accreditation body that complies with DOC PS 20. In lieu of a grade mark, a certificate of inspection issued by a lumber

grading or inspection agency meeting the requirements of this section shall be accepted. Wood structural panels shall conform to DOC PS 1 or DOC PS 2 and shall be identified by a grade mark or certificate of inspection issued by an approved agency.

R404.2.2 Stud size. The studs used in foundation walls shall be 2-inch by 6-inch (51 mm by 152 mm) members. When spaced 16 inches (406 mm) on center, a wood species with an F_b value of not less than 1,250 pounds per square inch (8619 kPa) as listed in AF&PA/NDS shall be used. When spaced 12 inches (305 mm) on center, an F_b of not less than 875 psi (6033 kPa) shall be required.

R404.2.3 Height of backfill. For wood foundations that are not designed and installed in accordance with AF&PA PWF, the height of backfill against a foundation wall shall not exceed 4 feet (1219 mm). When the height of fill is more than 12 inches (305 mm) above the interior grade of a crawl space or floor of a basement, the thickness of the plywood sheathing shall meet the requirements of Table R404.2.3.

R404.2.4 Backfilling. Wood foundation walls shall not be backfilled until the basement floor and first floor have been constructed or the walls have been braced. For crawl space construction, backfill or bracing shall be installed on the interior of the walls prior to placing backfill on the exterior.

R404.2.5 Drainage and dampproofing. Wood foundation basements shall be drained and dampproofed in accordance with Sections R405 and R406, respectively.

R404.2.6 Fastening. Wood structural panel foundation wall sheathing shall be attached to framing in accordance with Table R602.3(1) and Section R402.1.1.

R404.3 Wood sill plates. Wood sill plates shall be a minimum of 2-inch by 4-inch (51 mm by 102 mm) nominal lumber. Sill plate anchorage shall be in accordance with Sections R403.1.6 and R602.11.

R404.4 Retaining walls. Retaining walls that are not laterally supported at the top and that retain in excess of 24 inches (610 mm) of unbalanced fill shall be designed to ensure stability against overturning, sliding, excessive foundation pressure and water uplift. Retaining walls shall be designed for a safety factor of 1.5 against lateral sliding and overturning.

TABLE R404.2.3
PLYWOOD GRADE AND THICKNESS FOR WOOD FOUNDATION CONSTRUCTION (30 pcf equivalent-fluid weight soil pressure)

HEIGHT OF FILL (inches)	STUD SPACING (inches)	FACE GRAIN ACROSS STUDS			FACE GRAIN PARALLEL TO STUDS		
		Grade[a]	Minimum thickness (inches)	Span rating	Grade[a]	Minimum thickness (inches)[b, c]	Span rating
24	12	B	$^{15}/_{32}$	32/16	A	$^{15}/_{32}$	32/16
					B	$^{15}/_{32}$[c]	32/16
	16	B	$^{15}/_{32}$	32/16	A	$^{15}/_{32}$[c]	32/16
					B	$^{19}/_{32}$[c] (4, 5 ply)	40/20
36	12	B	$^{15}/_{32}$	32/16	A	$^{15}/_{32}$	32/16
					B	$^{15}/_{32}$[c] (4, 5 ply)	32/16
					B	$^{19}/_{32}$ (4, 5 ply)	40/20
	16	B	$^{15}/_{32}$[c]	32/16	A	$^{19}/_{32}$	40/20
					B	$^{23}/_{32}$	48/24
48	12	B	$^{15}/_{32}$	32/16	A	$^{15}/_{32}$[c]	32/16
					B	$^{19}/_{32}$[c] (4, 5 ply)	40/20
	16	B	$^{19}/_{32}$	40/20	A	$^{19}/_{32}$[c]	40/20
					A	$^{23}/_{32}$	48/24

For SI: 1 inch = 25.4 mm, 1 foot = 304.8 mm, 1 pound per cubic foot = 0.1572 kN/m^3.

a. Plywood shall be of the following minimum grades in accordance with DOC PS 1 or DOC PS 2:
   1. DOC PS 1 Plywood grades marked:
      1.1. Structural I C-D (Exposure 1).
      1.2. C-D (Exposure 1).
   2. DOC PS 2 Plywood grades marked:
      2.1. Structural I Sheathing (Exposure 1).
      2.2. Sheathing (Exposure 1).
   3. Where a major portion of the wall is exposed above ground and a better appearance is desired, the following plywood grades marked exterior are suitable:
      3.1. Structural I A-C, Structural I B-C or Structural I C-C (Plugged) in accordance with DOC PS 1.
      3.2. A-C Group 1, B-C Group 1, C-C (Plugged) Group 1 or MDO Group 1 in accordance with DOC PS 1.
      3.3. Single Floor in accordance with DOC PS 1 or DOC PS 2.

b. Minimum thickness $^{15}/_{32}$ inch, except crawl space sheathing may be $^{3}/_{8}$ inch for face grain across studs 16 inches on center and maximum 2-foot depth of unequal fill.

c. For this fill height, thickness and grade combination, panels that are continuous over less than three spans (across less than three stud spacings) require blocking 16 inches above the bottom plate. Offset adjacent blocks and fasten through studs with two 16d corrosion-resistant nails at each end.

R404.5 Precast concrete foundation walls.

R404.5.1 Design. Precast concrete foundation walls shall be designed in accordance with accepted engineering practice. The design and manufacture of precast concrete foundation wall panels shall comply with the materials requirements of Section R402.3 or ACI 318. The panel design drawings shall be prepared by a registered design professional.

R404.5.2 Precast concrete foundation design drawings. Precast concrete foundation wall design drawings shall be submitted to the building official and approved prior to installation. Drawings shall include, at a minimum, the information specified below:

1. Design loading as applicable;
2. Footing design and material;
3. Concentrated loads and their points of application;
4. Soil bearing capacity;
5. Maximum allowable total uniform load;
6. Seismic design category; and
7. Basic wind speed.

R404.5.3 Identification. Precast concrete foundation wall panels shall be identified by a certificate of inspection label issued by an approved third party inspection agency.

SECTION R405
FOUNDATION DRAINAGE

R405.1 Concrete or masonry foundations. Drains shall be provided around all concrete or masonry foundations that retain earth and enclose habitable or usable spaces located below grade. Drainage tiles, gravel or crushed stone drains, perforated pipe or other approved systems or materials shall be installed at or below the area to be protected and shall discharge by gravity or mechanical means into an approved drainage system. Gravel or crushed stone drains shall extend at least 1 foot (305 mm) beyond the outside edge of the footing and 6 inches (152 mm) above the top of the footing and be covered with an approved filter membrane material. The top of open joints of drain tiles shall be protected with strips of building paper. Perforated drains shall be surrounded with an approved filter membrane or the filter membrane shall cover the washed gravel or crushed rock covering the drain. Drainage tiles or perforated pipe shall be placed on a minimum of 2 inches (51 mm) of washed gravel or crushed rock at least one sieve size larger than the tile joint opening or perforation and covered with not less than 6 inches (152 mm) of the same material.

Exception: A drainage system is not required when the foundation is installed on well-drained ground or sand-gravel mixture soils according to the Unified Soil Classification System, Group I Soils, as detailed in Table R405.1.

TABLE R405.1
PROPERTIES OF SOILS CLASSIFIED ACCORDING TO THE UNIFIED SOIL CLASSIFICATION SYSTEM

SOIL GROUP	UNIFIED SOIL CLASSIFICATION SYSTEM SYMBOL	SOIL DESCRIPTION	DRAINAGE CHARACTERISTICS[a]	FROST HEAVE POTENTIAL	VOLUME CHANGE POTENTIAL EXPANSION[b]
Group I	GW	Well-graded gravels, gravel sand mixtures, little or no fines	Good	Low	Low
	GP	Poorly graded gravels or gravel sand mixtures, little or no fines	Good	Low	Low
	SW	Well-graded sands, gravelly sands, little or no fines	Good	Low	Low
	SP	Poorly graded sands or gravelly sands, little or no fines	Good	Low	Low
	GM	Silty gravels, gravel-sand-silt mixtures	Good	Medium	Low
	SM	Silty sand, sand-silt mixtures	Good	Medium	Low
Group II	GC	Clayey gravels, gravel-sand-clay mixtures	Medium	Medium	Low
	SC	Clayey sands, sand-clay mixture	Medium	Medium	Low
	ML	Inorganic silts and very fine sands, rock flour, silty or clayey fine sands or clayey silts with slight plasticity	Medium	High	Low
	CL	Inorganic clays of low to medium plasticity, gravelly clays, sandy clays, silty clays, lean clays	Medium	Medium	Medium to Low
Group III	CH	Inorganic clays of high plasticity, fat clays	Poor	Medium	High
	MH	Inorganic silts, micaceous or diatomaceous fine sandy or silty soils, elastic silts	Poor	High	High
Group IV	OL	Organic silts and organic silty clays of low plasticity	Poor	Medium	Medium
	OH	Organic clays of medium to high plasticity, organic silts	Unsatisfactory	Medium	High
	Pt	Peat and other highly organic soils	Unsatisfactory	Medium	High

For SI: 1 inch = 25.4 mm.

a. The percolation rate for good drainage is over 4 inches per hour, medium drainage is 2 inches to 4 inches per hour, and poor is less than 2 inches per hour.

b. Soils with a low potential expansion typically have a plasticity index (PI) of 0 to 15, soils with a medium potential expansion have a PI of 10 to 35 and soils with a high potential expansion have a PI greater than 20.

R405.1.1 Precast concrete foundation. Precast concrete walls that retain earth and enclose habitable or useable space located below-grade that rest on crushed stone footings shall have a perforated drainage pipe installed below the base of the wall on either the interior or exterior side of the wall, at least one foot (305 mm) beyond the edge of the wall. If the exterior drainage pipe is used, an approved filter membrane material shall cover the pipe. The drainage system shall discharge into an approved sewer system or to daylight.

R405.2 Wood foundations. Wood foundations enclosing habitable or usable spaces located below grade shall be adequately drained in accordance with Sections R405.2.1 through R405.2.3.

R405.2.1 Base. A porous layer of gravel, crushed stone or coarse sand shall be placed to a minimum thickness of 4 inches (102 mm) under the basement floor. Provision shall be made for automatic draining of this layer and the gravel or crushed stone wall footings.

R405.2.2 Vapor retarder. A 6-mil-thick (0.15 mm) polyethylene vapor retarder shall be applied over the porous layer with the basement floor constructed over the polyethylene.

R405.2.3 Drainage system. In other than Group I soils, a sump shall be provided to drain the porous layer and footings. The sump shall be at least 24 inches (610 mm) in diameter or 20 inches square (0.0129 m^2), shall extend at least 24 inches (610 mm) below the bottom of the basement floor and shall be capable of positive gravity or mechanical drainage to remove any accumulated water. The drainage system shall discharge into an approved sewer system or to daylight.

SECTION R406
FOUNDATION WATERPROOFING AND DAMPPROOFING

R406.1 Concrete and masonry foundation dampproofing. Except where required by Section R406.2 to be waterproofed, foundation walls that retain earth and enclose interior spaces and floors below grade shall be dampproofed from the top of the footing to the finished grade. Masonry walls shall have not less than $^3/_8$ inch (9.5 mm) portland cement parging applied to the exterior of the wall. The parging shall be dampproofed in accordance with one of the following:

1. Bituminous coating.
2. Three pounds per square yard (1.63 kg/m^2) of acrylic modified cement.
3. One-eighth inch (3.2 mm) coat of surface-bonding cement complying with ASTM C 887.
4. Any material permitted for waterproofing in Section R406.2.
5. Other approved methods or materials.

Exception: Parging of unit masonry walls is not required where a material is approved for direct application to the masonry.

Concrete walls shall be dampproofed by applying any one of the above listed dampproofing materials or any one of the waterproofing materials listed in Section R406.2 to the exterior of the wall.

R406.2 Concrete and masonry foundation waterproofing. In areas where a high water table or other severe soil-water conditions are known to exist, exterior foundation walls that retain earth and enclose interior spaces and floors below grade shall be waterproofed from the top of the footing to the finished grade. Walls shall be waterproofed in accordance with one of the following:

1. Two-ply hot-mopped felts.
2. Fifty-five-pound (25 kg) roll roofing.
3. Six-mil (0.15 mm) polyvinyl chloride.
4. Six-mil (0.15 mm) polyethylene.
5. Forty-mil (1 mm) polymer-modified asphalt.
6. Sixty-mil (1.5 mm) flexible polymer cement.
7. One-eighth-inch (3 mm) cement-based, fiber-reinforced, waterproof coating.
8. Sixty-mil (0.22 mm) solvent-free liquid-applied synthetic rubber.

Exception: Organic-solvent-based products such as hydrocarbons, chlorinated hydrocarbons, ketones and esters shall not be used for ICF walls with expanded polystyrene form material. Use of plastic roofing cements, acrylic coatings, latex coatings, mortars and pargings to seal ICF walls is permitted. Cold-setting asphalt or hot asphalt shall conform to type C of ASTM D 449. Hot asphalt shall be applied at a temperature of less than 200°F (93°C).

All joints in membrane waterproofing shall be lapped and sealed with an adhesive compatible with the membrane.

R406.3 Dampproofing for wood foundations. Wood foundations enclosing habitable or usable spaces located below grade shall be dampproofed in accordance with Sections R406.3.1 through R406.3.4.

R406.3.1 Panel joint sealed. Plywood panel joints in the foundation walls shall be sealed full length with a caulking compound capable of producing a moisture-proof seal under the conditions of temperature and moisture content at which it will be applied and used.

R406.3.2 Below-grade moisture barrier. A 6-mil-thick (0.15 mm) polyethylene film shall be applied over the below-grade portion of exterior foundation walls prior to backfilling. Joints in the polyethylene film shall be lapped 6 inches (152 mm) and sealed with adhesive. The top edge of the polyethylene film shall be bonded to the sheathing to form a seal. Film areas at grade level shall be protected from mechanical damage and exposure by a pressure preservatively treated lumber or plywood strip attached to the wall several inches above finish grade level and extending approximately 9 inches (229 mm) below grade. The joint between the strip and the wall shall be caulked full length prior to fastening the strip to the wall. Other coverings appropriate to the architectural treatment may also be

used. The polyethylene film shall extend down to the bottom of the wood footing plate but shall not overlap or extend into the gravel or crushed stone footing.

R406.3.3 Porous fill. The space between the excavation and the foundation wall shall be backfilled with the same material used for footings, up to a height of 1 foot (305 mm) above the footing for well-drained sites, or one-half the total back-fill height for poorly drained sites. The porous fill shall be covered with strips of 30-pound (13.6 kg) asphalt paper or 6-mil (0.15 mm) polyethylene to permit water seepage while avoiding infiltration of fine soils.

R406.3.4 Backfill. The remainder of the excavated area shall be backfilled with the same type of soil as was removed during the excavation.

R406.4 Precast concrete foundation system dampproofing. Except where required by Section R406.2 to be waterproofed, precast concrete foundation walls enclosing habitable or useable spaces located below grade shall be dampproofed in accordance with Section R406.1.

R406.4.1 Panel joints sealed. Precast concrete foundation panel joints shall be sealed full height with a sealant meeting ASTM C 920, Type S or M, Grade NS, Class 25, Use NT, M or A. Joint sealant shall be installed in accordance with the manufacturer's installation instructions.

SECTION R407
COLUMNS

R407.1 Wood column protection. Wood columns shall be protected against decay as set forth in Section R317.

R407.2 Steel column protection. All surfaces (inside and outside) of steel columns shall be given a shop coat of rust-inhibitive paint, except for corrosion-resistant steel and steel treated with coatings to provide corrosion resistance.

R407.3 Structural requirements. The columns shall be restrained to prevent lateral displacement at the bottom end. Wood columns shall not be less in nominal size than 4 inches by 4 inches (102 mm by 102 mm). Steel columns shall not be less than 3-inch-diameter (76 mm) Schedule 40 pipe manufactured in accordance with ASTM A 53 Grade B or approved equivalent.

Exception: In Seismic Design Categories A, B and C, columns no more than 48 inches (1219 mm) in height on a pier or footing are exempt from the bottom end lateral displacement requirement within under-floor areas enclosed by a continuous foundation.

SECTION R408
UNDER-FLOOR SPACE

R408.1 Ventilation. The under-floor space between the bottom of the floor joists and the earth under any building (except space occupied by a basement) shall have ventilation openings through foundation walls or exterior walls. The minimum net area of ventilation openings shall not be less than 1 square foot (0.0929 m^2) for each 150 square feet (14 m^2) of under-floor space area, unless the ground surface is covered by a Class 1 vapor retarder material. When a Class 1 vapor retarder material is used, the minimum net area of ventilation openings shall not be less than 1 square foot (0.0929 m^2) for each 1,500 square feet (140 m^2) of under-floor space area. One such ventilating opening shall be within 3 feet (914 mm) of each corner of the building.

R408.2 Openings for under-floor ventilation. The minimum net area of ventilation openings shall not be less than 1 square foot (0.0929 m^2) for each 150 square feet (14 m^2) of under-floor area. One ventilation opening shall be within 3 feet (915 mm) of each corner of the building. Ventilation openings shall be covered for their height and width with any of the following materials provided that the least dimension of the covering shall not exceed $^1/_4$ inch (6.4 mm):

1. Perforated sheet metal plates not less than 0.070 inch (1.8 mm) thick.
2. Expanded sheet metal plates not less than 0.047 inch (1.2 mm) thick.
3. Cast-iron grill or grating.
4. Extruded load-bearing brick vents.
5. Hardware cloth of 0.035 inch (0.89 mm) wire or heavier.
6. Corrosion-resistant wire mesh, with the least dimension being $^1/_8$ inch (3.2 mm) thick.

Exception: The total area of ventilation openings shall be permitted to be reduced to $^1/_{1,500}$ of the under-floor area where the ground surface is covered with an approved Class I vapor retarder material and the required openings are placed to provide cross ventilation of the space. The installation of operable louvers shall not be prohibited.

R408.3 Unvented crawl space. Ventilation openings in under-floor spaces specified in Sections R408.1 and R408.2 shall not be required where:

1. Exposed earth is covered with a continuous Class I vapor retarder. Joints of the vapor retarder shall overlap by 6 inches (152 mm) and shall be sealed or taped. The edges of the vapor retarder shall extend at least 6 inches (152 mm) up the stem wall and shall be attached and sealed to the stem wall or insulation; and
2. One of the following is provided for the under-floor space:
   2.1. Continuously operated mechanical exhaust ventilation at a rate equal to 1 cubic foot per minute (0.47 L/s) for each 50 square feet (4.7 m^2) of crawlspace floor area, including an air pathway to the common area (such as a duct or transfer grille). *Crawl space perimeter walls shall be insulated in accordance with the minimum insulation requirements established in the California Energy Code. Crawl space insulation shall be permanently fastened to the wall and extend downward from the floor to the finished grade level and then vertically and/or horizontally for at least an additional 24 inches (610 mm).*
   2.2. Conditioned air supply sized to deliver at a rate equal to 1 cubic foot per minute (0.47 L/s) for

each 50 square feet (4.7 m^2) of under-floor area, including a return air pathway to the common area (such as a duct or transfer grille). Crawl space perimeter walls shall be insulated in accordance with *the minimum insulation requirements established in the California Energy Code. Crawl space insulation shall be permanently fastened to the wall and extend downward from the floor to the finished grade level and then vertically and/or horizontally for at least an additional 24 inches (610 mm).*

2.3. Plenum in structures complying with the *California Mechanical Code,* if under-floor space is used as a plenum.

R408.4 Access. Access shall be provided to all under-floor spaces. Access openings through the floor shall be a minimum of 18 inches by 24 inches (457 mm by 610 mm). Openings through a perimeter wall shall be not less than 16 inches by 24 inches (407 mm by 610 mm). When any portion of the through-wall access is below grade, an areaway not less than 16 inches by 24 inches (407 mm by 610 mm) shall be provided. The bottom of the areaway shall be below the threshold of the access opening. Through wall access openings shall not be located under a door to the residence. See the *California Mechanical Code* for access requirements where mechanical equipment is located under floors.

R408.5 Removal of debris. The under-floor grade shall be cleaned of all vegetation and organic material. All wood forms used for placing concrete shall be removed before a building is occupied or used for any purpose. All construction materials shall be removed before a building is occupied or used for any purpose.

R408.6 Finished grade. The finished grade of under-floor surface may be located at the bottom of the footings; however, where there is evidence that the groundwater table can rise to within 6 inches (152 mm) of the finished floor at the building perimeter or where there is evidence that the surface water does not readily drain from the building site, the grade in the under-floor space shall be as high as the outside finished grade, unless an approved drainage system is provided.

R408.7 Flood resistance. For buildings located in flood hazard areas as established in Table R301.2(1):

1. Walls enclosing the under-floor space shall be provided with flood openings in accordance with Section R322.2.2.
2. The finished ground level of the under-floor space shall be equal to or higher than the outside finished ground level on at least one side.

   Exception: Under-floor spaces that meet the requirements of FEMA/FIA TB 11-1.

CALIFORNIA RESIDENTIAL CODE – MATRIX ADOPTION TABLE
CHAPTER 5 – FLOORS

(Matrix Adoption Tables are non-regulatory, intended only as an aid to the user.
See Chapter 1 for state agency authority and building applications.)

Adopting agency	BSC	SFM	HCD			DSA		OSHPD				BSCC	DHS	AGR	DWR	CEC	CA	SL	SLC
			1	2	1/AC	AC	SS	1	2	3	4								
Adopt entire chapter																			
Adopt entire chapter as amended (amended sections listed below)			X																
Adopt only those sections that are listed below																			
[California Code of Regulations, Title 19, Division 1]																			
Chapter / Section																			
R502.1			X																
R502.11.1			X																
R506.2.3.1			*X*																

* The California Code of Regulations (CCR), Title 19, Division 1 provisions that are found in the *California Fire Code* are a reprint from the current CCR, Title 19, Division 1 text for the code user's convenience only. The scope, applicability and appeals procedures of CCR, Title 19, Division I remain the same.

CHAPTER 5
FLOORS

SECTION R501
GENERAL

R501.1 Application. The provisions of this chapter shall control the design and construction of the floors for all buildings including the floors of attic spaces used to house mechanical or plumbing fixtures and equipment.

R501.2 Requirements. Floor construction shall be capable of accommodating all loads according to Section R301 and of transmitting the resulting loads to the supporting structural elements.

R501.3 Fire protection of floors. Floor assemblies, not required elsewhere in this code to be fire-resistance rated, shall be provided with a $^1/_2$-inch (12.7 mm) gypsum wallboard membrane, $^5/_8$-inch (16 mm) wood structural panel membrane, or equivalent on the underside of the floor framing member.

Exceptions:

1. Floor assemblies located directly over a space protected by an automatic sprinkler system in accordance with Section *R313*, NFPA13D, or other approved equivalent sprinkler system.
2. Floor assemblies located directly over a crawl space not intended for storage or fuel-fired appliances.
3. Portions of floor assemblies can be unprotected when complying with the following:
   - 3.1. The aggregate area of the unprotected portions shall not exceed 80 square feet per story
   - 3.2. Fire blocking in accordance with Section R302.11.1 shall be installed along the perimeter of the unprotected portion to separate the unprotected portion from the remainder of the floor assembly.
4. Wood floor assemblies using dimension lumber or structural composite lumber equal to or greater than 2-inch by 10-inch (50.8 mm by 254 mm) nominal dimension, or other approved floor assemblies demonstrating equivalent fire performance.

SECTION R502
WOOD FLOOR FRAMING

R502.1 Identification. Load-bearing dimension lumber for joists, beams and girders shall be identified by a grade *mark* of a lumber grading or inspection agency that has been approved by an accreditation body that complies with DOC PS 20. In lieu of a grade mark, a certificate of inspection issued by a lumber grading or inspection agency meeting the requirements of this section shall be accepted.

Note: See Section R301.1.1.1 for limited-density owner-built rural dwellings.

R502.1.1 Preservative-treated lumber. Preservative treated dimension lumber shall also be identified as required by Section R317.2.

R502.1.2 Blocking and subflooring. Blocking shall be a minimum of utility grade lumber. Subflooring may be a minimum of utility grade lumber or No. 4 common grade boards.

R502.1.3 End-jointed lumber. Approved end-jointed lumber identified by a grade mark conforming to Section R502.1 may be used interchangeably with solid-sawn members of the same species and grade. End-jointed lumber

used in an assembly required elsewhere in this code to have a fire-resistance rating shall have the designation "Heat Resistant Adhesive" or "HRA" included in its grade mark.

R502.1.4 Prefabricated wood I-joists. Structural capacities and design provisions for prefabricated wood I-joists shall be established and monitored in accordance with ASTM D 5055.

R502.1.5 Structural glued laminated timbers. Glued laminated timbers shall be manufactured and identified as required in ANSI/AITC A190.1 and ASTM D 3737.

R502.1.6 Structural log members. Stress grading of structural log members of nonrectangular shape, as typically used in log buildings, shall be in accordance with ASTM D 3957. Such structural log members shall be identified by the grade mark of an approved lumber grading or inspection agency. In lieu of a grade mark on the material, a certificate of inspection as to species and grade issued by a lumber-grading or inspection agency meeting the requirements of this section shall be permitted to be accepted.

R502.1.7 Structural composite lumber. Structural capacities for structural composite lumber shall be established and monitored in accordance with ASTM D 5456.

R502.2 Design and construction. Floors shall be designed and constructed in accordance with the provisions of this chapter, Figure R502.2 and Sections R317 and R318 or in accordance with AF&PA/NDS.

R502.2.1 Framing at braced wall lines. A load path for lateral forces shall be provided between floor framing and braced wall panels located above or below a floor, as specified in Section R602.10.8.

R502.3 Allowable joist spans. Spans for floor joists shall be in accordance with Tables R502.3.1(1) and R502.3.1(2). For other grades and species and for other loading conditions, refer to the AF&PA Span Tables for Joists and Rafters.

R502.3.1 Sleeping areas and attic joists. Table R502.3.1(1) shall be used to determine the maximum allowable span of floor joists that support sleeping areas and attics that are accessed by means of a fixed stairway in accordance with Section R311.7 provided that the design live load does not exceed 30 pounds per square foot (1.44 kPa) and the design dead load does not exceed 20 pounds per square foot (0.96 kPa). The allowable span of ceiling joists that support attics used for limited storage or no storage shall be determined in accordance with Section R802.4.

R502.3.2 Other floor joists. Table R502.3.1(2) shall be used to determine the maximum allowable span of floor joists that support all other areas of the building, other than sleeping rooms and attics, provided that the design live load does not exceed 40 pounds per square foot (1.92 kPa) and the design dead load does not exceed 20 pounds per square foot (0.96 kPa).

R502.3.3 Floor cantilevers. Floor cantilever spans shall not exceed the nominal depth of the wood floor joist. Floor cantilevers constructed in accordance with Table R502.3.3(1) shall be permitted when supporting a light-frame bearing wall and roof only. Floor cantilevers supporting an exterior balcony are permitted to be constructed in accordance with Table R502.3.3(2)

R502.4 Joists under bearing partitions. Joists under parallel bearing partitions shall be of adequate size to support the load. Double joists, sized to adequately support the load, that are separated to permit the installation of piping or vents shall be full depth solid blocked with lumber not less than 2 inches (51 mm) in nominal thickness spaced not more than 4 feet (1219 mm) on center. Bearing partitions perpendicular to joists shall not be offset from supporting girders, walls or partitions more than the joist depth unless such joists are of sufficient size to carry the additional load.

R502.5 Allowable girder spans. The allowable spans of girders fabricated of dimension lumber shall not exceed the values set forth in Tables R502.5(1) and R502.5(2).

R502.6 Bearing. The ends of each joist, beam or girder shall have not less than 1.5 inches (38 mm) of bearing on wood or metal and not less than 3 inches (76 mm) on masonry or concrete except where supported on a 1-inch by 4-inch (25.4 mm by 102 mm) ribbon strip and nailed to the adjacent stud or by the use of approved joist hangers. The bearing on masonry or concrete shall be direct, or a sill plate of 2-inch-minimum (51 mm) nominal thickness shall be provided under the joist, beam or girder. The sill plate shall provide a minimum nominal bearing area of 48 square inches (30 865 square mm).

R502.6.1 Floor systems. Joists framing from opposite sides over a bearing support shall lap a minimum of 3 inches (76 mm) and shall be nailed together with a minimum three 10d face nails. A wood or metal splice with strength equal to or greater than that provided by the nailed lap is permitted.

R502.6.2 Joist framing. Joists framing into the side of a wood girder shall be supported by approved framing anchors or on ledger strips not less than nominal 2 inches by 2 inches (51 mm by 51 mm).

R502.7 Lateral restraint at supports. Joists shall be supported laterally at the ends by full-depth solid blocking not less than 2 inches (51 mm) nominal in thickness; or by attachment to a full-depth header, band or rim joist, or to an adjoining stud or shall be otherwise provided with lateral support to prevent rotation.

Exceptions:

1. Trusses, structural composite lumber, structural glued-laminated members and I-joists shall be supported laterally as required by the manufacturer's recommendations.
2. In Seismic Design Categories D_0, D_1 and D_2, lateral restraint shall also be provided at each intermediate support.

R502.7.1 Bridging. Joists exceeding a nominal 2 inches by 12 inches (51 mm by 305 mm) shall be supported laterally by solid blocking, diagonal bridging (wood or metal), or a continuous 1 inch by 3 inch (25.4 mm by 76 mm) strip nailed across the bottom of joists perpendicular to joists at intervals not exceeding 8 feet (2438 mm).

Exception: Trusses, structural composite lumber, structural glued-laminated members and I-joists shall

be supported laterally as required by the manufacturer's recommendations.

R502.8 Cutting, drilling and notching. Structural floor members shall not be cut, bored or notched in excess of the limitations specified in this section. See Figure R502.8.

R502.8.1 Sawn lumber. Notches in solid lumber joists, rafters and beams shall not exceed one-sixth of the depth of the member, shall not be longer than one-third of the depth of the member and shall not be located in the middle one-third of the span. Notches at the ends of the member shall not exceed one-fourth the depth of the member. The tension side of members 4 inches (102 mm) or greater in nominal thickness shall not be notched except at the ends of the members. The diameter of holes bored or cut into members shall not exceed one-third the depth of the member. Holes shall not be closer than 2 inches (51 mm) to the top or bottom of the member, or to any other hole located in the member. Where the member is also notched, the hole shall not be closer than 2 inches (51 mm) to the notch.

R502.8.2 Engineered wood products. Cuts, notches and holes bored in trusses, structural composite lumber, structural glue-laminated members or I-joists are prohibited except where permitted by the manufacturer's recommendations or where the effects of such alterations are specifically considered in the design of the member by a registered design professional.

R502.9 Fastening. Floor framing shall be nailed in accordance with Table R602.3(1). Where posts and beam or girder construction is used to support floor framing, positive connections shall be provided to ensure against uplift and lateral displacement.

R502.10 Framing of openings. Openings in floor framing shall be framed with a header and trimmer joists. When the header joist span does not exceed 4 feet (1219 mm), the header joist may be a single member the same size as the floor joist. Single trimmer joists may be used to carry a single header joist that is located within 3 feet (914 mm) of the trimmer joist bearing. When the header joist span exceeds 4 feet (1219 mm), the trimmer joists and the header joist shall be doubled and of sufficient cross section to support the floor joists framing into the header. Approved hangers shall be used for the header joist to trimmer joist connections when the header joist span exceeds 6 feet (1829 mm). Tail joists over 12 feet (3658 mm) long shall be supported at the header by framing anchors or on ledger strips not less than 2 inches by 2 inches (51 mm by 51 mm).

R502.11 Wood trusses.

R502.11.1 Design. Wood trusses shall be designed in accordance with approved engineering practice. The design and manufacture of metal plate connected wood trusses shall comply with ANSI/TPI 1. The truss design drawings shall be prepared by a registered *design* professional.

R502.11.2 Bracing. Trusses shall be braced to prevent rotation and provide lateral stability in accordance with the requirements specified in the construction documents for the building and on the individual truss design drawings. In the absence of specific bracing requirements, trusses shall be braced in accordance with accepted industry practices, such as, the SBCA *Building Component Safety Information (BCSI) Guide to Good Practice for Handling, Installing & Bracing of Metal Plate Connected Wood Trusses.*

R502.11.3 Alterations to trusses. Truss members and components shall not be cut, notched, spliced or otherwise altered in any way without the approval of a registered design professional. Alterations resulting in the addition of load (e.g., HVAC equipment, water heater, etc.), that exceed the design load for the truss, shall not be permitted without verification that the truss is capable of supporting the additional loading.

R502.11.4 Truss design drawings. Truss design drawings, prepared in compliance with Section R502.11.1, shall be submitted to the building official and approved prior to installation. Truss design drawings shall be provided with the shipment of trusses delivered to the job site. Truss design drawings shall include, at a minimum, the information specified below:

1. Slope or depth, span and spacing.
2. Location of all joints.
3. Required bearing widths.
4. Design loads as applicable:
   - 4.1. Top chord live load;
   - 4.2. Top chord dead load;
   - 4.3. Bottom chord live load;
   - 4.4. Bottom chord dead load;
   - 4.5. Concentrated loads and their points of application; and
   - 4.6. Controlling wind and earthquake loads.
5. Adjustments to lumber and joint connector design values for conditions of use.
6. Each reaction force and direction.
7. Joint connector type and description, e.g., size, thickness or gauge, and the dimensioned location of each joint connector except where symmetrically located relative to the joint interface.
8. Lumber size, species and grade for each member.
9. Connection requirements for:
   - 9.1. Truss-to-girder-truss;
   - 9.2. Truss ply-to-ply; and
   - 9.3. Field splices.
10. Calculated deflection ratio and/or maximum description for live and total load.
11. Maximum axial compression forces in the truss members to enable the building designer to design the size, connections and anchorage of the permanent continuous lateral bracing. Forces shall be shown on the truss drawing or on supplemental documents.
12. Required permanent truss member bracing location.

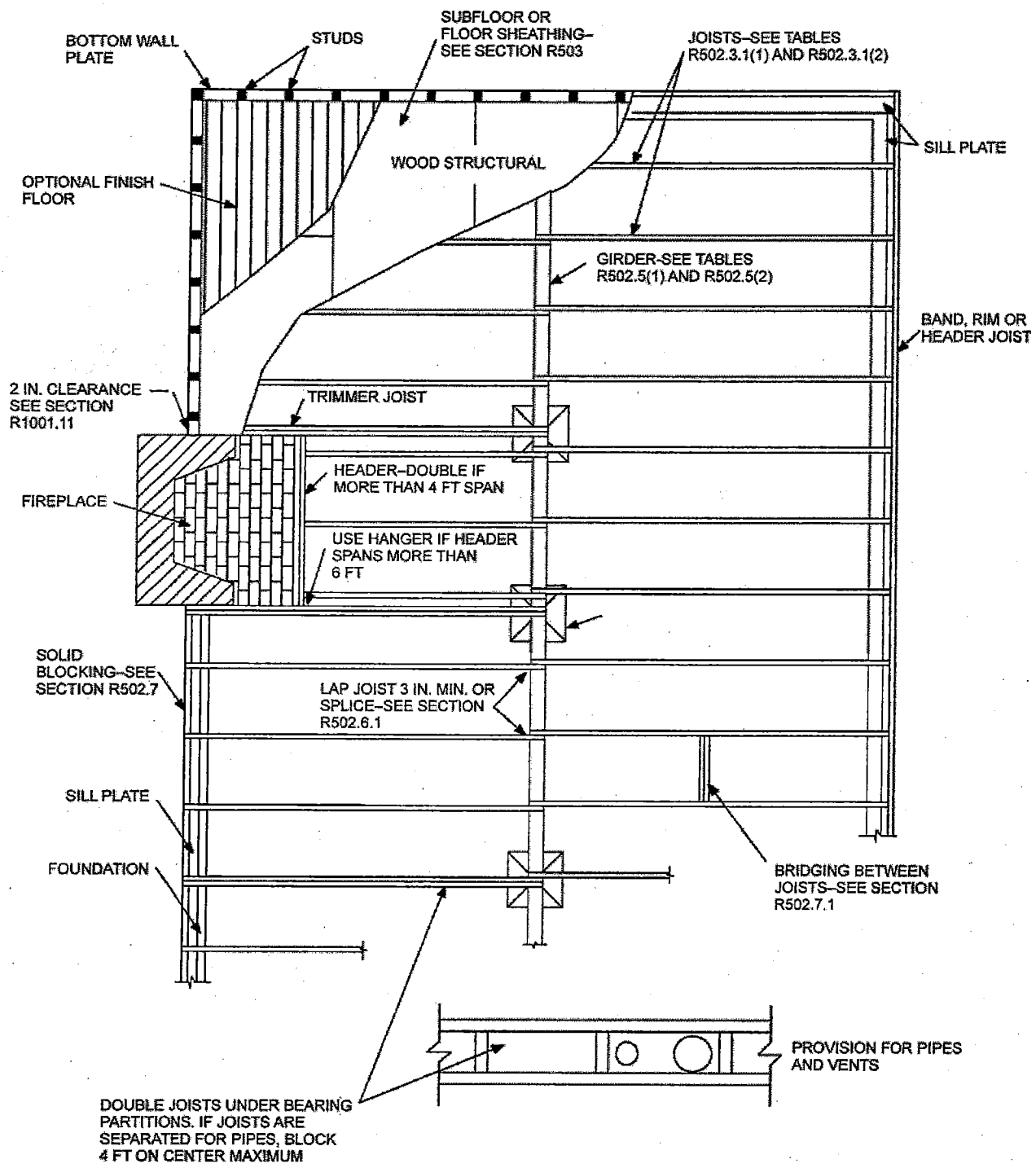

For SI: 1 inch = 25.4 mm, 1 foot = 304.8 mm.

FIGURE R502.2
FLOOR CONSTRUCTION

TABLE R502.3.1(1)
FLOOR JOIST SPANS FOR COMMON LUMBER SPECIES
(Residential sleeping areas, live load = 30 psf, L/Δ = 360)[a]

JOIST SPACING (inches)	SPECIES AND GRADE		DEAD LOAD = 10 psf				DEAD LOAD = 20 psf			
			2 × 6	2 × 8	2 × 10	2 × 12	2 × 6	2 × 8	2 × 10	2 × 12
			Maximum floor joist spans							
			(ft - in.)	(ft - in.)	(ft - in.)	(ft - in.)	(ft - in.)	(ft - in.)	(ft - in.)	(ft - in.)
12	Douglas fir-larch	SS	12-6	16-6	21-0	25-7	12-6	16-6	21-0	25-7
	Douglas fir-larch	#1	12-0	15-10	20-3	24-8	12-0	15-7	19-0	22-0
	Douglas fir-larch	#2	11-10	15-7	19-10	23-0	11-6	14-7	17-9	20-7
	Douglas fir-larch	#3	9-8	12-4	15-0	17-5	8-8	11-0	13-5	15-7
	Hem-fir	SS	11-10	15-7	19-10	24-2	11-10	15-7	19-10	24-2
	Hem-fir	#1	11-7	15-3	19-5	23-7	11-7	15-2	18-6	21-6
	Hem-fir	#2	11-0	14-6	18-6	22-6	11-0	14-4	17-6	20-4
	Hem-fir	#3	9-8	12-4	15-0	17-5	8-8	11-0	13-5	15-7
	Southern pine	SS	12-3	16-2	20-8	25-1	12-3	16-2	20-8	25-1
	Southern pine	#1	12-0	15-10	20-3	24-8	12-0	15-10	20-3	24-8
	Southern pine	#2	11-10	15-7	19-10	24-2	11-10	15-7	18-7	21-9
	Southern pine	#3	10-5	13-3	15-8	18-8	9-4	11-11	14-0	16-8
	Spruce-pine-fir	SS	11-7	15-3	19-5	23-7	11-7	15-3	19-5	23-7
	Spruce-pine-fir	#1	11-3	14-11	19-0	23-0	11-3	14-7	17-9	20-7
	Spruce-pine-fir	#2	11-3	14-11	19-0	23-0	11-3	14-7	17-9	20-7
	Spruce-pine-fir	#3	9-8	12-4	15-0	17-5	8-8	11-0	13-5	15-7
16	Douglas fir-larch	SS	11-4	15-0	19-1	23-3	11-4	15-0	19-1	23-0
	Douglas fir-larch	#1	10-11	14-5	18-5	21-4	10-8	13-6	16-5	19-1
	Douglas fir-larch	#2	10-9	14-1	17-2	19-11	9-11	12-7	15-5	17-10
	Douglas fir-larch	#3	8-5	10-8	13-0	15-1	7-6	9-6	11-8	13-6
	Hem-fir	SS	10-9	14-2	18-0	21-11	10-9	14-2	18-0	21-11
	Hem-fir	#1	10-6	13-10	17-8	20-9	10-4	13-1	16-0	18-7
	Hem-fir	#2	10-0	13-2	16-10	19-8	9-10	12-5	15-2	17-7
	Hem-fir	#3	8-5	10-8	13-0	15-1	7-6	9-6	11-8	13-6
	Southern pine	SS	11-2	14-8	18-9	22-10	11-2	14-8	18-9	22-10
	Southern pine	#1	10-11	14-5	18-5	22-5	10-11	14-5	17-11	21-4
	Southern pine	#2	10-9	14-2	18-0	21-1	10-5	13-6	16-1	18-10
	Southern pine	#3	9-0	11-6	13-7	16-2	8-1	10-3	12-2	14-6
	Spruce-pine-fir	SS	10-6	13-10	17-8	21-6	10-6	13-10	17-8	21-4
	Spruce-pine-fir	#1	10-3	13-6	17-2	19-11	9-11	12-7	15-5	17-10
	Spruce-pine-fir	#2	10-3	13-6	17-2	19-11	9-11	12-7	15-5	17-10
	Spruce-pine-fir	#3	8-5	10-8	13-0	15-1	7-6	9-6	11-8	13-6

(continued)

TABLE R502.3.1(1)—continued
FLOOR JOIST SPANS FOR COMMON LUMBER SPECIES
(Residential sleeping areas, live load = 30 psf, L/Δ = 360)[a]

JOIST SPACING (inches)	SPECIES AND GRADE		DEAD LOAD = 10 psf				DEAD LOAD = 20 psf			
			2 × 6	2 × 8	2 × 10	2 × 12	2 × 6	2 × 8	2 × 10	2 × 12
			Maximum floor joist spans							
			(ft - in.)	(ft - in.)	(ft - in.)	(ft - in.)	(ft - in.)	(ft - in.)	(ft - in.)	(ft - in.)
19.2	Douglas fir-larch	SS	10-8	14-1	18-0	21-10	10-8	14-1	18-0	21-0
	Douglas fir-larch	#1	10-4	13-7	16-9	19-6	9-8	12-4	15-0	17-5
	Douglas fir-larch	#2	10-1	12-10	15-8	18-3	9-1	11-6	14-1	16-3
	Douglas fir-larch	#3	7-8	9-9	11-10	13-9	6-10	8-8	10-7	12-4
	Hem-fir	SS	10-1	13-4	17-0	20-8	10-1	13-4	17-0	20-7
	Hem-fir	#1	9-10	13-0	16-4	19-0	9-6	12-0	14-8	17-0
	Hem-fir	#2	9-5	12-5	15-6	17-1	8-11	11-4	13-10	16-1
	Hem-fir	#3	7-8	9-9	11-10	13-9	6-10	8-8	10-7	12-4
	Southern pine	SS	10-6	13-10	17-8	21-6	10-6	13-10	17-8	21-6
	Southern pine	#1	10-4	13-7	17-4	21-1	10-4	13-7	16-4	19-6
	Southern pine	#2	10-1	13-4	16-5	19-3	9-6	12-4	14-8	17-2
	Southern pine	#3	8-3	10-6	12-5	14-9	7-4	9-5	11-1	13-2
	Spruce-pine-fir	SS	9-10	13-0	16-7	20-2	9-10	13-0	16-7	19-6
	Spruce-pine-fir	#1	9-8	12-9	15-8	18-3	9-1	11-6	14-1	16-3
	Spruce-pine-fir	#2	9-8	12-9	15-8	18-3	9-1	11-6	14-1	16-3
	Spruce-pine-fir	#3	7-8	9-9	11-10	13-9	6-10	8-8	10-7	12-4
24	Douglas fir-larch	SS	9-11	13-1	16-8	20-3	9-11	13-1	16-2	18-9
	Douglas fir-larch	#1	9-7	12-4	15-0	17-5	8-8	11-0	13-5	15-7
	Douglas fir-larch	#2	9-1	11-6	14-1	16-3	8-1	10-3	12-7	14-7
	Douglas fir-larch	#3	6-10	8-8	10-7	12-4	6-2	7-9	9-6	11-0
	Hem-fir	SS	9-4	12-4	15-9	19-2	9-4	12-4	15-9	18-5
	Hem-fir	#1	9-2	12-0	14-8	17-0	8-6	10-9	13-1	15-2
	Hem-fir	#2	8-9	11-4	13-10	16-1	8-0	10-2	12-5	14-4
	Hem-fir	#3	6-10	8-8	10-7	12-4	6-2	7-9	9-6	11-0
	Southern pine	SS	9-9	12-10	16-5	19-11	9-9	12-10	16-5	19-11
	Southern pine	#1	9-7	12-7	16-1	19-6	9-7	12-4	14-7	17-5
	Southern pine	#2	9-4	12-4	14-8	17-2	8-6	11-0	13-1	15-5
	Southern pine	#3	7-4	9-5	11-1	13-2	6-7	8-5	9-11	11-10
	Spruce-pine-fir	SS	9-2	12-1	15-5	18-9	9-2	12-1	15-0	17-5
	Spruce-pine-fir	#1	8-11	11-6	14-1	16-3	8-1	10-3	12-7	14-7
	Spruce-pine-fir	#2	8-11	11-6	14-1	16-3	8-1	10-3	12-7	14-7
	Spruce-pine-fir	#3	6-10	8-8	10-7	12-4	6-2	7-9	9-6	11-0

For SI: 1 inch = 25.4 mm, 1 foot = 304.8 mm, 1 pound per square foot = 0.0479 kPa.

Note: Check sources for availability of lumber in lengths greater than 20 feet.

a. Dead load limits for townhouses in Seismic Design Category C and all structures in Seismic Design Categories D_0, D_1 and D_2 shall be determined in accordance with Section R301.2.2.2.1.

TABLE R502.3.1(2)
FLOOR JOIST SPANS FOR COMMON LUMBER SPECIES
(Residential living areas, live load = 40 psf, L/Δ = 360)[b]

JOIST SPACING (inches)	SPECIES AND GRADE		DEAD LOAD = 10 psf				DEAD LOAD = 20 psf			
			2 × 6	2 × 8	2 × 10	2 × 12	2 × 6	2 × 8	2 × 10	2 × 12
			Maximum floor joist spans							
			(ft - in.)	(ft - in.)	(ft - in.)	(ft - in.)	(ft - in.)	(ft - in.)	(ft - in.)	(ft - in.)
12	Douglas fir-larch	SS	11-4	15-0	19-1	23-3	11-4	15-0	19-1	23-3
	Douglas fir-larch	#1	10-11	14-5	18-5	22-0	10-11	14-2	17-4	20-1
	Douglas fir-larch	#2	10-9	14-2	17-9	20-7	10-6	13-3	16-3	18-10
	Douglas fir-larch	#3	8-8	11-0	13-5	15-7	7-11	10-0	12-3	14-3
	Hem-fir	SS	10-9	14-2	18-0	21-11	10-9	14-2	18-0	21-11
	Hem-fir	#1	10-6	13-10	17-8	21-6	10-6	13-10	16-11	19-7
	Hem-fir	#2	10-0	13-2	16-10	20-4	10-0	13-1	16-0	18-6
	Hem-fir	#3	8-8	11-0	13-5	15-7	7-11	10-0	12-3	14-3
	Southern pine	SS	11-2	14-8	18-9	22-10	11-2	14-8	18-9	22-10
	Southern pine	#1	10-11	14-5	18-5	22-5	10-11	14-5	18-5	22-5
	Southern pine	#2	10-9	14-2	18-0	21-9	10-9	14-2	16-11	19-10
	Southern pine	#3	9-4	11-11	14-0	16-8	8-6	10-10	12-10	15-3
	Spruce-pine-fir	SS	10-6	13-10	17-8	21-6	10-6	13-10	17-8	21-6
	Spruce-pine-fir	#1	10-3	13-6	17-3	20-7	10-3	13-3	16-3	18-10
	Spruce-pine-fir	#2	10-3	13-6	17-3	20-7	10-3	13-3	16-3	18-10
	Spruce-pine-fir	#3	8-8	11-0	13-5	15-7	7-11	10-0	12-3	14-3
16	Douglas fir-larch	SS	10-4	13-7	17-4	21-1	10-4	13-7	17-4	21-0
	Douglas fir-larch	#1	9-11	13-1	16-5	19-1	9-8	12-4	15-0	17-5
	Douglas fir-larch	#2	9-9	12-7	15-5	17-10	9-1	11-6	14-1	16-3
	Douglas fir-larch	#3	7-6	9-6	11-8	13-6	6-10	8-8	10-7	12-4
16	Hem-fir	SS	9-9	12-10	16-5	19-11	9-9	12-10	16-5	19-11
	Hem-fir	#1	9-6	12-7	16-0	18-7	9-6	12-0	14-8	17-0
	Hem-fir	#2	9-1	12-0	15-2	17-7	8-11	11-4	13-10	16-1
	Hem-fir	#3	7-6	9-6	11-8	13-6	6-10	8-8	10-7	12-4
	Southern pine	SS	10-2	13-4	17-0	20-9	10-2	13-4	17-0	20-9
	Southern pine	#1	9-11	13-1	16-9	20-4	9-11	13-1	16-4	19-6
	Southern pine	#2	9-9	12-10	16-1	18-10	9-6	12-4	14-8	17-2
	Southern pine	#3	8-1	10-3	12-2	14-6	7-4	9-5	11-1	13-2
	Spruce-pine-fir	SS	9-6	12-7	16-0	19-6	9-6	12-7	16-0	19-6
	Spruce-pine-fir	#1	9-4	12-3	15-5	17-10	9-1	11-6	14-1	16-3
	Spruce-pine-fir	#2	9-4	12-3	15-5	17-10	9-1	11-6	14-1	16-3
	Spruce-pine-fir	#3	7-6	9-6	11-8	13-6	6-10	8-8	10-7	12-4

(continued)

TABLE R502.3.1(2)—continued
FLOOR JOIST SPANS FOR COMMON LUMBER SPECIES
(Residential living areas, live load = 40 psf, L/Δ = 360)[b]

JOIST SPACING (inches)	SPECIES AND GRADE		DEAD LOAD = 10 psf				DEAD LOAD = 20 psf			
			2 × 6	2 × 8	2 × 10	2 × 12	2 × 6	2 × 8	2 × 10	2 × 12
			Maximum floor joist spans							
			(ft - in.)	(ft - in.)	(ft - in.)	(ft - in.)	(ft - in.)	(ft - in.)	(ft - in.)	(ft - in.)
19.2	Douglas fir-larch	SS	9-8	12-10	16-4	19-10	9-8	12-10	16-4	19-2
	Douglas fir-larch	#1	9-4	12-4	15-0	17-5	8-10	11-3	13-8	15-11
	Douglas fir-larch	#2	9-1	11-6	14-1	16-3	8-3	10-6	12-10	14-10
	Douglas fir-larch	#3	6-10	8-8	10-7	12-4	6-3	7-11	9-8	11-3
	Hem-fir	SS	9-2	12-1	15-5	18-9	9-2	12-1	15-5	18-9
	Hem-fir	#1	9-0	11-10	14-8	17-0	8-8	10-11	13-4	15-6
	Hem-fir	#2	8-7	11-3	13-10	16-1	8-2	10-4	12-8	14-8
	Hem-fir	#3	6-10	8-8	10-7	12-4	6-3	7-11	9-8	11-3
	Southern pine	SS	9-6	12-7	16-0	19-6	9-6	12-7	16-0	19-6
	Southern pine	#1	9-4	12-4	15-9	19-2	9-4	12-4	14-11	17-9
	Southern pine	#2	9-2	12-1	14-8	17-2	8-8	11-3	13-5	15-8
	Southern pine	#3	7-4	9-5	11-1	13-2	6-9	8-7	10-1	12-1
	Spruce-pine-fir	SS	9-0	11-10	15-1	18-4	9-0	11-10	15-1	17-9
	Spruce-pine-fir	#	8-9	11-6	14-1	16-3	8-3	10-6	12-10	14-10
	Spruce-pine-fir	#2	8-9	11-6	14-1	16-3	8-3	10-6	12-10	14-10
	Spruce-pine-fir	#3	6-10	8-8	10-7	12-4	6-3	7-11	9-8	11-3
24	Douglas fir-larch	SS	9-0	11-11	15-2	18-5	9-0	11-11	14-9	17-1
	Douglas fir-larch	#1	8-8	11-0	13-5	15-7	7-11	10-0	12-3	14-3
	Douglas fir-larch	#2	8-1	10-3	12-7	14-7	7-5	9-5	11-6	13-4
	Douglas fir-larch	#3	6-2	7-9	9-6	11-0	5-7	7-1	8-8	10-1
	Hem-fir	SS	8-6	11-3	14-4	17-5	8-6	11-3	14-4	16-10[a]
	Hem-fir	#1	8-4	10-9	13-1	15-2	7-9	9-9	11-11	13-10
	Hem-fir	#2	7-11	10-2	12-5	14-4	7-4	9-3	11-4	13-1
	Hem-fir	#3	6-2	7-9	9-6	11-0	5-7	7-1	8-8	10-1
	Southern pine	SS	8-10	11-8	14-11	18-1	8-10	11-8	14-11	18-1
	Southern pine	#1	8-8	11-5	14-7	17-5	8-8	11-3	13-4	15-11
	Southern pine	#2	8-6	11-0	13-1	15-5	7-9	10-0	12-0	14-0
	Southern pine	#3	6-7	8-5	9-11	11-10	6-0	7-8	9-1	10-9
	Spruce-pine-fir	SS	8-4	11-0	14-0	17-0	8-4	11-0	13-8	15-11
	Spruce-pine-fir	#1	8-1	10-3	12-7	14-7	7-5	9-5	11-6	13-4
	Spruce-pine-fir	#2	8-1	10-3	12-7	14-7	7-5	9-5	11-6	13-4
	Spruce-pine-fir	#3	6-2	7-9	9-6	11-0	5-7	7-1	8-8	10-1

For SI: 1 inch = 25.4 mm, 1 foot = 304.8 mm, 1 pound per square foot = 0.0479 kPa.

Note: Check sources for availability of lumber in lengths greater than 20 feet.

a. End bearing length shall be increased to 2 inches.

b. Dead load limits for townhouses in Seismic Design Category C and all structures in Seismic Design Categories D_0, D_1, and D_2 shall be determined in accordance with Section R301.2.2.2.1.

TABLE R502.3.3(1)
CANTILEVER SPANS FOR FLOOR JOISTS SUPPORTING LIGHT-FRAME EXTERIOR BEARING WALL AND ROOF ONLY[a, b, c, f, g, h]
(Floor Live Load ≤ 40 psf, Roof Live Load ≤ 20 psf)

Member & Spacing	Maximum Cantilever Span (Uplift Force at Backspan Support in Lbs.)[d, e]											
	Ground Snow Load											
	≤ 20 psf			30 psf			50 psf			70 psf		
	Roof Width			Roof Width			Roof Width			Roof Width		
	24 ft	32 ft	40 ft	24 ft	32 ft	40 ft	24 ft	32 ft	40 ft	24 ft	32 ft	40 ft
2 × 8 @ 12″	20″ (177)	15″ (227)	—	18″ (209)	—	—	—	—	—	—	—	—
2 × 10 @ 16″	29″ (228)	21″ (297)	16″ (364)	26″ (271)	18″ (354)	—	20″ (375)	—	—	—	—	—
2 × 10 @ 12″	36″ (166)	26″ (219)	20″ (270)	34″ (198)	22″ (263)	16″ (324)	26″ (277)	—	—	19″ (356)	—	—
2 × 12 @ 16″	—	32″ (287)	25″ (356)	36″ (263)	29″ (345)	21″ (428)	29″ (367)	20″ (484)	—	23″ (471)	—	—
2 × 12 @ 12″	—	42″ (209)	31″ (263)	—	37″ (253)	27″ (317)	36″ (271)	27″ (358)	17″ (447)	31″ (348)	19″ (462)	—
2 × 12 @ 8″	—	48″ (136)	45″ (169)	—	48″ (164)	38″ (206)	—	40″ (233)	26″ (294)	36″ (230)	29″ (304)	18″ (379)

For SI: 1 inch = 25.4 mm, 1 foot = 304.8 mm, 1 pound per square foot = 0.0479 kPa.

a. Tabulated values are for clear-span roof supported solely by exterior bearing walls.
b. Spans are based on No. 2 Grade lumber of Douglas fir-larch, hem-fir, southern pine and spruce-pine-fir for repetitive (three or more) members.
c. Ratio of backspan to cantilever span shall be at least 3:1.
d. Connections capable of resisting the indicated uplift force shall be provided at the backspan support.
e. Uplift force is for a backspan to cantilever span ratio of 3:1. Tabulated uplift values are permitted to be reduced by multiplying by a factor equal to 3 divided by the actual backspan ratio provided (3/backspan ratio).
f. See Section R301.2.2.2.5, Item 1, for additional limitations on cantilevered floor joists for detached one- and two-family dwellings in Seismic Design Category D_0, D_1, or D_2 and townhouses in Seismic Design Category C, D_0, D_1 or D_2.
g. A full-depth rim joist shall be provided at the unsupported end of the cantilever joists. Solid blocking shall be provided at the supported end.
h. Linear interpolation shall be permitted for building widths and ground snow loads other than shown.

TABLE R502.3.3(2)
CANTILEVER SPANS FOR FLOOR JOISTS SUPPORTING EXTERIOR BALCONY[a, b, e, f]

Member Size	Spacing	Maximum Cantilever Span (Uplift Force at Backspan Support in lb)[c, d]		
		Ground Snow Load		
		≤ 30 psf	50 psf	70 psf
2 × 8	12″	42″ (139)	39″ (156)	34″ (165)
2 × 8	16″	36″ (151)	34″ (171)	29″ (180)
2 × 10	12″	61″ (164)	57″ (189)	49″ (201)
2 × 10	16″	53″ (180)	49″ (208)	42″ (220)
2 × 10	24″	43″ (212)	40″ (241)	34″ (255)
2 × 12	16″	72″ (228)	67″ (260)	57″ (268)
2 × 12	24″	58″ (279)	54″ (319)	47″ (330)

For SI: 1 inch = 25.4 mm, 1 pound per square foot = 0.0479 kPa.

a. Spans are based on No. 2 Grade lumber of Douglas fir-larch, hem-fir, southern pine and spruce-pine-fir for repetitive (three or more) members.
b. Ratio of backspan to cantilever span shall be at least 2:1.
c. Connections capable of resisting the indicated uplift force shall be provided at the backspan support.
d. Uplift force is for a backspan to cantilever span ratio of 2:1. Tabulated uplift values are permitted to be reduced by multiplying by a factor equal to 2 divided by the actual backspan ratio provided (2/backspan ratio).
e. A full-depth rim joist shall be provided at the unsupported end of the cantilever joists. Solid blocking shall be provided at the supported end.
f. Linear interpolation shall be permitted for ground snow loads other than shown.

R502.12 Draftstopping required. Draftstopping shall be provided in accordance with Section R302.12.

R502.13 Fireblocking required. Fireblocking shall be provided in accordance with Section R302.11.

SECTION R503
FLOOR SHEATHING

R503.1 Lumber sheathing. Maximum allowable spans for lumber used as floor sheathing shall conform to Tables R503.1, R503.2.1.1(1) and R503.2.1.1(2).

TABLE R503.1
MINIMUM THICKNESS OF LUMBER FLOOR SHEATHING

JOIST OR BEAM SPACING (inches)	MINIMUM NET THICKNESS	
	Perpendicular to joist	Diagonal to joist
24	$^{11}/_{16}$	$^{3}/_{4}$
16	$^{5}/_{8}$	$^{5}/_{8}$
48[a]	$1^{1}/_{2}$ T & G	N/A
54[b]		
60[c]		

For SI: 1 inch = 25.4 mm, 1 pound per square inch = 6.895 kPa.

N/A = Not applicable.

a. For this support spacing, lumber sheathing shall have a minimum F_b of 675 and minimum E of 1,100,000 (see AF&PA/NDS).

b. For this support spacing, lumber sheathing shall have a minimum F_b of 765 and minimum E of 1,400,000 (see AF&PA/NDS).

c. For this support spacing, lumber sheathing shall have a minimum F_b of 855 and minimum E of 1,700,000 (see AF&PA/NDS).

R503.1.1 End joints. End joints in lumber used as subflooring shall occur over supports unless end-matched lumber is used, in which case each piece shall bear on at least two joists. Subflooring may be omitted when joist spacing does not exceed 16 inches (406 mm) and a 1-inch (25.4 mm) nominal tongue-and-groove wood strip flooring is applied perpendicular to the joists.

R503.2 Wood structural panel sheathing.

R503.2.1 Identification and grade. Wood structural panel sheathing used for structural purposes shall conform to DOC PS 1, DOC PS 2 or, when manufactured in Canada, CSA O437 or CSA O325. All panels shall be identified for grade, bond classification, and Performance Category by a grade mark or certificate of inspection issued by an approved agency. The Performance Category value shall be used as the "nominal panel thickness" or "panel thickness" whenever referenced in this code.

R503.2.1.1 Subfloor and combined subfloor underlayment. Where used as subflooring or combination subfloor underlayment, wood structural panels shall be of one of the grades specified in Table R503.2.1.1(1). When sanded plywood is used as combination subfloor underlayment, the grade, bond classification, and Performance Category shall be as specified in Table R503.2.1.1(2).

R503.2.2 Allowable spans. The maximum allowable span for wood structural panels used as subfloor or combination subfloor underlayment shall be as set forth in Table R503.2.1.1(1), or APA E30. The maximum span for sanded plywood combination subfloor underlayment shall be as set forth in Table R503.2.1.1(2).

TABLE R503.2.1.1(2)
ALLOWABLE SPANS FOR SANDED PLYWOOD COMBINATION SUBFLOOR UNDERLAYMENT[a]

IDENTIFICATION	SPACING OF JOISTS (inches)		
	16	20	24
Species group[b]	—	—	—
1	$^{1}/_{2}$	$^{5}/_{8}$	$^{3}/_{4}$
2, 3	$^{5}/_{8}$	$^{3}/_{4}$	$^{7}/_{8}$
4	$^{3}/_{4}$	$^{7}/_{8}$	1

For SI: 1 inch = 25.4 mm, 1 pound per square foot = 0.0479 kPa.

a. Plywood continuous over two or more spans and face grain perpendicular to supports. Unsupported edges shall be tongue-and-groove or blocked except where nominal $^{1}/_{4}$-inch-thick underlayment or $^{3}/_{4}$-inch wood finish floor is used. Allowable uniform live load at maximum span based on deflection of $^{1}/_{360}$ of span is 100 psf.

b. Applicable to all grades of sanded exterior-type plywood.

R503.2.3 Installation. Wood structural panels used as subfloor or combination subfloor underlayment shall be attached to wood framing in accordance with Table R602.3(1) and shall be attached to cold-formed steel framing in accordance with Table R505.3.1(2).

R503.3 Particleboard.

R503.3.1 Identification and grade. Particleboard shall conform to ANSI A208.1 and shall be so identified by a grade mark or certificate of inspection issued by an approved agency.

R503.3.2 Floor underlayment. Particleboard floor underlayment shall conform to Type PBU and shall not be less than $^{1}/_{4}$ inch (6.4 mm) in thickness.

R503.3.3 Installation. Particleboard underlayment shall be installed in accordance with the recommendations of the manufacturer and attached to framing in accordance with Table R602.3(1).

SECTION R504
PRESSURE PRESERVATIVELY TREATED-WOOD FLOORS (ON GROUND)

R504.1 General. Pressure preservatively treated-wood basement floors and floors on ground shall be designed to withstand axial forces and bending moments resulting from lateral soil pressures at the base of the exterior walls and floor live and dead loads. Floor framing shall be designed to meet joist deflection requirements in accordance with Section R301.

R504.1.1 Unbalanced soil loads. Unless special provision is made to resist sliding caused by unbalanced lateral soil loads, wood basement floors shall be limited to applications where the differential depth of fill on opposite exterior foundation walls is 2 feet (610 mm) or less.

R504.1.2 Construction. Joists in wood basement floors shall bear tightly against the narrow face of studs in the foundation wall or directly against a band joist that bears on the studs. Plywood subfloor shall be continuous over lapped joists or over butt joints between in-line joists. Sufficient blocking shall be provided between joists to trans-

TABLE R502.5(1)
GIRDER SPANS[a] AND HEADER SPANS[a] FOR EXTERIOR BEARING WALLS
(Maximum spans for Douglas fir-larch, hem-fir, southern pine and spruce-pine-fir[b] and required number of jack studs)

GIRDERS AND HEADERS SUPPORTING	SIZE	GROUND SNOW LOAD (psf)[e]																	
		30						50						70					
		Building width[c] (feet)																	
		20		28		36		20		28		36		20		28		36	
		Span	NJ[d]	Span	NJ[d]	Span	NJ[d]	Span	NJ[d]	Span	NJ[d]	Span	NJ[d]	Span	NJ[d]	Span	NJ[d]	Span	NJ[d]
Roof and ceiling	2-2 × 4	3-6	1	3-2	1	2-10	1	3-2	1	2-9	1	2-6	1	2-10	1	2-6	1	2-3	1
	2-2 × 6	5-5	1	4-8	1	4-2	1	4-8	1	4-1	1	3-8	2	4-2	1	3-8	2	3-3	2
	2-2 × 8	6-10	1	5-11	2	5-4	2	5-11	2	5-2	2	4-7	2	5-4	2	4-7	2	4-1	2
	2-2 × 10	8-5	2	7-3	2	6-6	2	7-3	2	6-3	2	5-7	2	6-6	2	5-7	2	5-0	2
	2-2 × 12	9-9	2	8-5	2	7-6	2	8-5	2	7-3	2	6-6	2	7-6	2	6-6	2	5-10	3
	3-2 × 8	8-4	1	7-5	1	6-8	1	7-5	1	6-5	2	5-9	2	6-8	1	5-9	2	5-2	2
	3-2 × 10	10-6	1	9-1	2	8-2	2	9-1	2	7-10	2	7-0	2	8-2	2	7-0	2	6-4	2
	3-2 × 12	12-2	2	10-7	2	9-5	2	10-7	2	9-2	2	8-2	2	9-5	2	8-2	2	7-4	2
	4-2 × 8	9-2	1	8-4	1	7-8	1	8-4	1	7-5	1	6-8	1	7-8	1	6-8	1	5-11	2
	4-2 × 10	11-8	1	10-6	1	9-5	2	10-6	1	9-1	2	8-2	2	9-5	2	8-2	2	7-3	2
	4-2 × 12	14-1	1	12-2	2	10-11	2	12-2	2	10-7	2	9-5	2	10-11	2	9-5	2	8-5	2
Roof, ceiling and one center-bearing floor	2-2 × 4	3-1	1	2-9	1	2-5	1	2-9	1	2-5	1	2-2	1	2-7	1	2-3	1	2-0	1
	2-2 × 6	4-6	1	4-0	1	3-7	2	4-1	1	3-7	2	3-3	2	3-9	2	3-3	2	2-11	2
	2-2 × 8	5-9	2	5-0	2	4-6	2	5-2	2	4-6	2	4-1	2	4-9	2	4-2	2	3-9	2
	2-2 × 10	7-0	2	6-2	2	5-6	2	6-4	2	5-6	2	5-0	2	5-9	2	5-1	2	4-7	3
	2-2 × 12	8-1	2	7-1	2	6-5	2	7-4	2	6-5	2	5-9	3	6-8	2	5-10	3	5-3	3
	3-2 × 8	7-2	1	6-3	2	5-8	2	6-5	2	5-8	2	5-1	2	5-11	2	5-2	2	4-8	2
	3-2 × 10	8-9	2	7-8	2	6-11	2	7-11	2	6-11	2	6-3	2	7-3	2	6-4	2	5-8	2
	3-2 × 12	10-2	2	8-11	2	8-0	2	9-2	2	8-0	2	7-3	2	8-5	2	7-4	2	6-7	2
	4-2 × 8	8-1	1	7-3	1	6-7	1	7-5	1	6-6	1	5-11	2	6-10	1	6-0	2	5-5	2
	4-2 × 10	10-1	1	8-10	2	8-0	2	9-1	2	8-0	2	7-2	2	8-4	2	7-4	2	6-7	2
	4-2 × 12	11-9	2	10-3	2	9-3	2	10-7	2	9-3	2	8-4	2	9-8	2	8-6	2	7-7	2
Roof, ceiling and one clear span floor	2-2 × 4	2-8	1	2-4	1	2-1	1	2-7	1	2-3	1	2-0	1	2-5	1	2-1	1	1-10	1
	2-2 × 6	3-11	1	3-5	2	3-0	2	3-10	2	3-4	2	3-0	2	3-6	2	3-1	2	2-9	2
	2-2 × 8	5-0	2	4-4	2	3-10	2	4-10	2	4-2	2	3-9	2	4-6	2	3-11	2	3-6	2
	2-2 × 10	6-1	2	5-3	2	4-8	2	5-11	2	5-1	2	4-7	3	5-6	2	4-9	2	4-3	3
	2-2 × 12	7-1	2	6-1	3	5-5	3	6-10	2	5-11	3	5-4	3	6-4	2	5-6	3	5-0	3
	3-2 × 8	6-3	2	5-5	2	4-10	2	6-1	2	5-3	2	4-8	2	5-7	2	4-11	2	4-5	2
	3-2 × 10	7-7	2	6-7	2	5-11	2	7-5	2	6-5	2	5-9	2	6-10	2	6-0	2	5-4	2
	3-2 × 12	8-10	2	7-8	2	6-10	2	8-7	2	7-5	2	6-8	2	7-11	2	6-11	2	6-3	2
	4-2 × 8	7-2	1	6-3	2	5-7	2	7-0	1	6-1	2	5-5	2	6-6	1	5-8	2	5-1	2
	4-2 × 10	8-9	2	7-7	2	6-10	2	8-7	2	7-5	2	6-7	2	7-11	2	6-11	2	6-2	2
	4-2 × 12	10-2	2	8-10	2	7-11	2	9-11	2	8-7	2	7-8	2	9-2	2	8-0	2	7-2	2
Roof, ceiling and two center-bearing floors	2-2 × 4	2-7	1	2-3	1	2-0	1	2-6	1	2-2	1	1-11	1	2-4	1	2-0	1	1-9	1
	2-2 × 6	3-9	2	3-3	2	2-11	2	3-8	2	3-2	2	2-10	2	3-5	2	3-0	2	2-8	2
	2-2 × 8	4-9	2	4-2	2	3-9	2	4-7	2	4-0	2	3-8	2	4-4	2	3-9	2	3-5	2
	2-2 × 10	5-9	2	5-1	2	4-7	3	5-8	2	4-11	2	4-5	3	5-3	2	4-7	3	4-2	3
	2-2 × 12	6-8	2	5-10	3	5-3	3	6-6	2	5-9	3	5-2	3	6-1	3	5-4	3	4-10	3
	3-2 × 8	5-11	2	5-2	2	4-8	2	5-9	2	5-1	2	4-7	2	5-5	2	4-9	2	4-3	2
	3-2 × 10	7-3	2	6-4	2	5-8	2	7-1	2	6-2	2	5-7	2	6-7	2	5-9	2	5-3	2
	3-2 × 12	8-5	2	7-4	2	6-7	2	8-2	2	7-2	2	6-5	3	7-8	2	6-9	2	6-1	3
	4-2 × 8	6-10	1	6-0	2	5-5	2	6-8	1	5-10	2	5-3	2	6-3	2	5-6	2	4-11	2
	4-2 × 10	8-4	2	7-4	2	6-7	2	8-2	2	7-2	2	6-5	2	7-7	2	6-8	2	6-0	2
	4-2 × 12	9-8	2	8-6	2	7-8	2	9-5	2	8-3	2	7-5	2	8-10	2	7-9	2	7-0	2
Roof, ceiling, and two clear span floors	2-2 × 4	2-1	1	1-8	1	1-6	2	2-0	1	1-8	1	1-5	2	2-0	1	1-8	1	1-5	2
	2-2 × 6	3-1	2	2-8	2	2-4	2	3-0	2	2-7	2	2-3	2	2-11	2	2-7	2	2-3	2
	2-2 × 8	3-10	2	3-4	2	3-0	3	3-10	2	3-4	2	2-11	3	3-9	2	3-3	2	2-11	3

(continued)

TABLE R502.5(1)—continued
GIRDER SPANS[a] AND HEADER SPANS[a] FOR EXTERIOR BEARING WALLS
(Maximum spans for Douglas fir-larch, hem-fir, southern pine and spruce-pine-fir[b] and required number of jack studs)

GIRDERS AND HEADERS SUPPORTING	SIZE	GROUND SNOW LOAD (psf)[e]																	
		30						50						70					
		Building width[c] (feet)																	
		20		28		36		20		28		36		20		28		36	
		Span	NJ[d]	Span	NJ[d]	Span	NJ[d]	Span	NJ[d]	Span	NJ[d]	Span	NJ[d]	Span	NJ[d]	Span	NJ[d]	Span	NJ[d]
Roof, ceiling, and two clear span floors	2-2 × 10	4-9	2	4-1	3	3-8	3	4-8	2	4-0	3	3-7	3	4-7	3	4-0	3	3-6	3
	2-2 × 12	5-6	3	4-9	3	4-3	3	5-5	3	4-8	3	4-2	3	5-4	3	4-7	3	4-1	4
	3-2 × 8	4-10	2	4-2	2	3-9	2	4-9	2	4-1	2	3-8	2	4-8	2	4-1	2	3-8	2
	3-2 × 10	5-11	2	5-1	2	4-7	3	5-10	2	5-0	2	4-6	3	5-9	2	4-11	2	4-5	3
	3-2 × 12	6-10	2	5-11	3	5-4	3	6-9	2	5-10	3	5-3	3	6-8	2	5-9	3	5-2	3
	4-2 × 8	5-7	2	4-10	2	4-4	2	5-6	2	4-9	2	4-3	2	5-5	2	4-8	2	4-2	2
	4-2 × 10	6-10	2	5-11	2	5-3	2	6-9	2	5-10	2	5-2	2	6-7	2	5-9	2	5-1	2
	4-2 × 12	7-11	2	6-10	2	6-2	3	7-9	2	6-9	2	6-0	3	7-8	2	6-8	2	5-11	3

For SI: 1 inch = 25.4 mm, 1 pound per square foot = 0.0479 kPa.

a. Spans are given in feet and inches.

b. Tabulated values assume #2 grade lumber.

c. Building width is measured perpendicular to the ridge. For widths between those shown, spans are permitted to be interpolated.

d. NJ - Number of jack studs required to support each end. Where the number of required jack studs equals one, the header is permitted to be supported by an approved framing anchor attached to the full-height wall stud and to the header.

e. Use 30 psf ground snow load for cases in which ground snow load is less than 30 psf and the roof live load is equal to or less than 20 psf.

TABLE R502.5(2)
GIRDER SPANS[a] AND HEADER SPANS[a] FOR INTERIOR BEARING WALLS
(Maximum spans for Douglas fir-larch, hem-fir, southern pine and spruce-pine-fir[b] and required number of jack studs)

HEADERS AND GIRDERS SUPPORTING	SIZE	BUILDING Width[c] (feet)					
		20		28		36	
		Span	NJ[d]	Span	NJ[d]	Span	NJ[d]
One floor only	2-2 × 4	3-1	1	2-8	1	2-5	1
	2-2 × 6	4-6	1	3-11	1	3-6	1
	2-2 × 8	5-9	1	5-0	2	4-5	2
	2-2 × 10	7-0	2	6-1	2	5-5	2
	2-2 × 12	8-1	2	7-0	2	6-3	2
	3-2 × 8	7-2	1	6-3	1	5-7	2
	3-2 × 10	8-9	1	7-7	2	6-9	2
	3-2 × 12	10-2	2	8-10	2	7-10	2
	4-2 × 8	9-0	1	7-8	1	6-9	1
	4-2 × 10	10-1	1	8-9	1	7-10	2
	4-2 × 12	11-9	1	10-2	2	9-1	2
Two floors	2-2 × 4	2-2	1	1-10	1	1-7	1
	2-2 × 6	3-2	2	2-9	2	2-5	2
	2-2 × 8	4-1	2	3-6	2	3-2	2
	2-2 × 10	4-11	2	4-3	2	3-10	3
	2-2 × 12	5-9	2	5-0	3	4-5	3
	3-2 × 8	5-1	2	4-5	2	3-11	2
	3-2 × 10	6-2	2	5-4	2	4-10	2
	3-2 × 12	7-2	2	6-3	2	5-7	3
	4-2 × 8	6-1	1	5-3	2	4-8	2
	4-2 × 10	7-2	2	6-2	2	5-6	2
	4-2 × 12	8-4	2	7-2	2	6-5	2

For SI: 1 inch = 25.4 mm, 1 foot = 304.8 mm.

a. Spans are given in feet and inches.

b. Tabulated values assume #2 grade lumber.

c. Building width is measured perpendicular to the ridge. For widths between those shown, spans are permitted to be interpolated.

d. NJ - Number of jack studs required to support each end. Where the number of required jack studs equals one, the header is permitted to be supported by an approved framing anchor attached to the full-height wall stud and to the header.

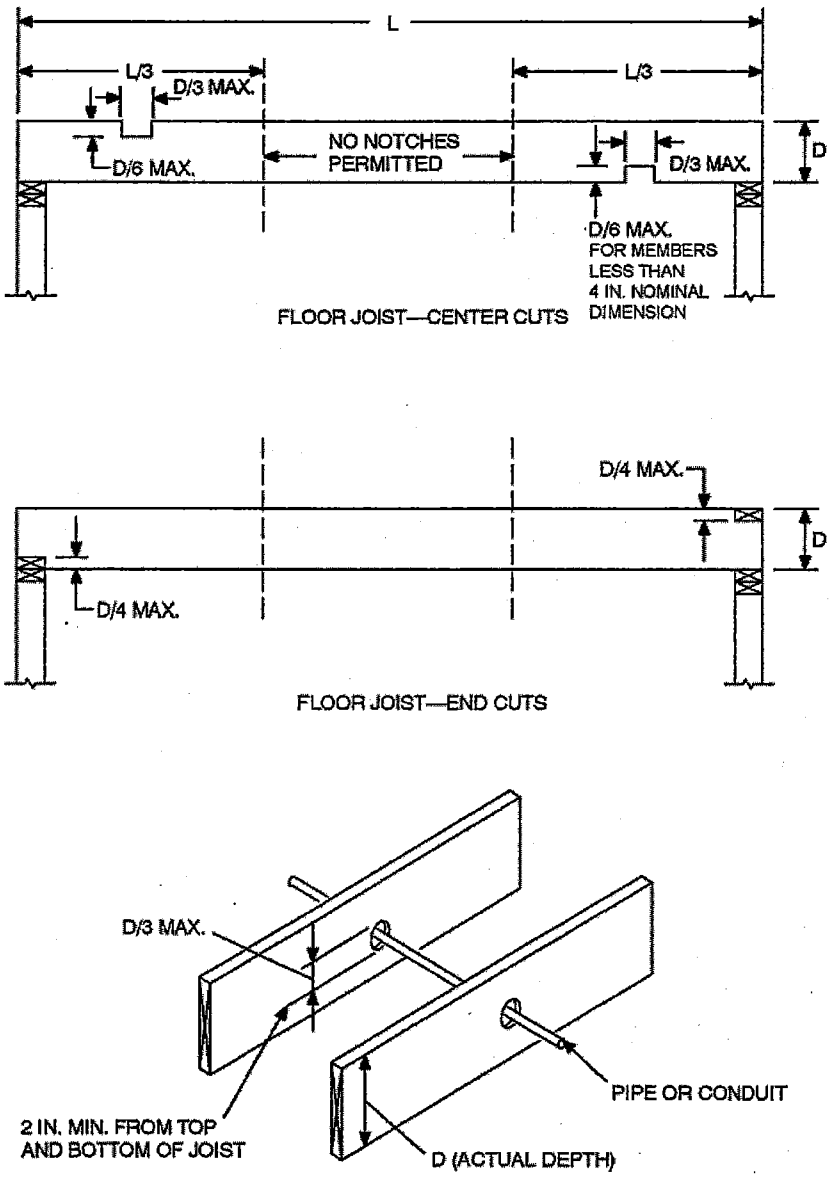

For SI: 1 inch = 25.4 mm.

FIGURE R502.8
CUTTING, NOTCHING AND DRILLING

TABLE R503.2.1.1(1)
ALLOWABLE SPANS AND LOADS FOR WOOD STRUCTURAL PANELS FOR ROOF AND SUBFLOOR SHEATHING AND COMBINATION SUBFLOOR UNDERLAYMENT[a, b, c]

SPAN RATING	MINIMUM NOMINAL PANEL THICKNESS (inch)	ALLOWABLE LIVE LOAD (psf)[h, l]		MAXIMUM SPAN (inches)		LOAD (pounds per square foot, at maximum span)		MAXIMUM SPAN (inches)
		SPAN @ 16″ o.c.	SPAN @ 24″ o.c.	With edge support[d]	Without edge support	Total load	Live load	
Sheathing[e]				Roof[f]				Subfloor[l]
16/0	3/8	30	—	16	16	40	30	0
20/0	3/8	50	—	20	20	40	30	0
24/0	3/8	100	30	24	20[g]	40	30	0
24/16	7/16	100	40	24	24	50	40	16
32/16	15/32, 1/2	180	70	32	28	40	30	16[h]
40/20	19/32, 5/8	305	130	40	32	40	30	20[h, i]
48/24	23/32, 3/4	—	175	48	36	45	35	24
60/32	7/8	—	305	60	48	45	35	32
Underlayment, C-C plugged, single floor[e]				Roof[f]				Combination subfloor underlayment[k]
16 o.c.	19/32, 5/8	100	40	24	24	50	40	16[i]
20 o.c.	19/32, 5/8	150	60	32	32	40	30	20[i, j]
24 o.c.	23/32, 3/4	240	100	48	36	35	25	24
32 o.c.	7/8	—	185	48	40	50	40	32
48 o.c.	1 3/32, 1 1/8	—	290	60	48	50	40	48

For SI: 1 inch = 25.4 mm, 1 pound per square foot = 0.0479 kPa.

a. The allowable total loads were determined using a dead load of 10 psf. If the dead load exceeds 10 psf, then the live load shall be reduced accordingly.

b. Panels continuous over two or more spans with long dimension (strength axis) perpendicular to supports. Spans shall be limited to values shown because of possible effect of concentrated loads.

c. Applies to panels 24 inches or wider.

d. Lumber blocking, panel edge clips (one midway between each support, except two equally spaced between supports when span is 48 inches), tongue-and-groove panel edges, or other approved type of edge support.

e. Includes Structural I panels in these grades.

f. Uniform load deflection limitation: 1/180 of span under live load plus dead load, 1/240 of span under live load only.

g. Maximum span 24 inches for 15/32-and 1/2-inch panels.

h. Maximum span 24 inches where 3/4-inch wood finish flooring is installed at right angles to joists.

i. Maximum span 24 inches where 1.5 inches of lightweight concrete or approved cellular concrete is placed over the subfloor.

j. Unsupported edges shall have tongue-and-groove joints or shall be supported with blocking unless minimum nominal 1/4-inch thick underlayment with end and edge joints offset at least 2 inches or 1.5 inches of lightweight concrete or approved cellular concrete is placed over the subfloor, or 3/4-inch wood finish flooring is installed at right angles to the supports. Allowable uniform live load at maximum span, based on deflection of 1/360 of span, is 100 psf.

k. Unsupported edges shall have tongue-and-groove joints or shall be supported by blocking unless nominal 1/4-inch-thick underlayment with end and edge joints offset at least 2 inches or 3/4-inch wood finish flooring is installed at right angles to the supports. Allowable uniform live load at maximum span, based on deflection of 1/360 of span, is 100 psf, except panels with a span rating of 48 on center are limited to 65 psf total uniform load at maximum span.

l. Allowable live load values at spans of 16" o.c. and 24" o.c taken from reference standard APA E30, APA Engineered Wood Construction Guide. Refer to reference standard for allowable spans not listed in the table.

fer lateral forces at the base of the end walls into the floor system.

R504.1.3 Uplift and buckling. Where required, resistance to uplift or restraint against buckling shall be provided by interior bearing walls or properly designed stub walls anchored in the supporting soil below.

R504.2 Site preparation. The area within the foundation walls shall have all vegetation, topsoil and foreign material removed, and any fill material that is added shall be free of vegetation and foreign material. The fill shall be compacted to assure uniform support of the pressure preservatively treated-wood floor sleepers.

R504.2.1 Base. A minimum 4-inch-thick (102 mm) granular base of gravel having a maximum size of $^3/_4$ inch (19.1 mm) or crushed stone having a maximum size of $^1/_2$ inch (12.7 mm) shall be placed over the compacted earth.

R504.2.2 Moisture barrier. Polyethylene sheeting of minimum 6-mil (0.15 mm) thickness shall be placed over the granular base. Joints shall be lapped 6 inches (152 mm) and left unsealed. The polyethylene membrane shall be placed over the pressure preservatively treated-wood sleepers and shall not extend beneath the footing plates of the exterior walls.

R504.3 Materials. All framing materials, including sleepers, joists, blocking and plywood subflooring, shall be pressure-preservative treated and dried after treatment in accordance with AWPA U1 (Commodity Specification A, Use Category 4B and Section 5.2), and shall bear the label of an accredited agency.

SECTION R505
STEEL FLOOR FRAMING

R505.1 Cold-formed steel floor framing. Elements shall be straight and free of any defects that would significantly affect structural performance. Cold-formed steel floor framing members shall comply with the requirements of this section.

R505.1.1 Applicability limits. The provisions of this section shall control the construction of cold-formed steel floor framing for buildings not greater than 60 feet (18 288 mm) in length perpendicular to the joist span, not greater than 40 feet (12 192 mm) in width parallel to the joist span, and less than or equal to three stories above grade plane. Cold-formed steel floor framing constructed in accordance with the provisions of this section shall be limited to sites subjected to a maximum design wind speed of 110 miles per hour (49 m/s), Exposure B or C, and a maximum ground snow load of 70 pounds per square foot (3.35 kPa).

R505.1.2 In-line framing. When supported by cold-formed steel framed walls in accordance with Section R603, cold-formed steel floor framing shall be constructed with floor joists located in-line with load-bearing studs located below the joists in accordance with Figure R505.1.2 and the tolerances specified as follows:

1. The maximum tolerance shall be $^3/_4$ inch (19.1 mm) between the centerline of the horizontal framing member and the centerline of the vertical framing member.
2. Where the centerline of the horizontal framing member and bearing stiffener are located to one side of the centerline of the vertical framing member, the maximum tolerance shall be $^1/_8$ inch (3 mm) between the web of the horizontal framing member and the edge of the vertical framing member.

R505.1.3 Floor trusses. Cold-formed steel trusses shall be designed, braced and installed in accordance with AISI S100, Section D4. In the absence of specific bracing requirements, trusses shall be braced in accordance with accepted industry practices, such as the SBCA *Cold-Formed Steel Building Component Safety Information (CFSBCSI), Guide to Good Practice for Handling, Installing & Bracing of Cold-Formed Steel Trusses*. Truss members shall not be notched, cut or altered in any manner without an approved design.

R505.2 Structural framing. Load-bearing cold-formed steel floor framing members shall comply with Figure R505.2(1) and with the dimensional and minimum thickness requirements specified in Tables R505.2(1) and R505.2(2). Tracks shall comply with Figure R505.2(2) and shall have a minimum flange width of $1^1/_4$ inches (32 mm).

TABLE R505.2(2)
MINIMUM THICKNESS OF COLD-FORMED STEEL MEMBERS

DESIGNATION THICKNESS (mils)	MINIMUM BASE STEEL THICKNESS (inches)
33	0.0329
43	0.0428
54	0.0538
68	0.0677
97	0.0966

For SI: inch = 25.4 mm, 1 mil = 0.0254 mm.

R505.2.1 Material. Load-bearing cold-formed steel framing members shall be cold formed to shape from structural quality sheet steel complying with the requirements of one of the following:

1. ASTM A 653: Grades 33 and 50 (Class 1 and 3).
2. ASTM A 792: Grades 33 and 50A.
3. ASTM A 1003: Structural Grades 33 Type H and 50 Type H.

R505.2.2 Identification. Load-bearing cold-formed steel framing members shall have a legible label, stencil, stamp or embossment with the following information as a minimum:

1. Manufacturer's identification.
2. Minimum base steel thickness in inches (mm).
3. Minimum coating designation.
4. Minimum yield strength, in kips per square inch (ksi) (MPa).

R505.2.3 Corrosion protection. Load-bearing cold-formed steel framing shall have a metallic coating complying with ASTM A 1003 and one of the following:

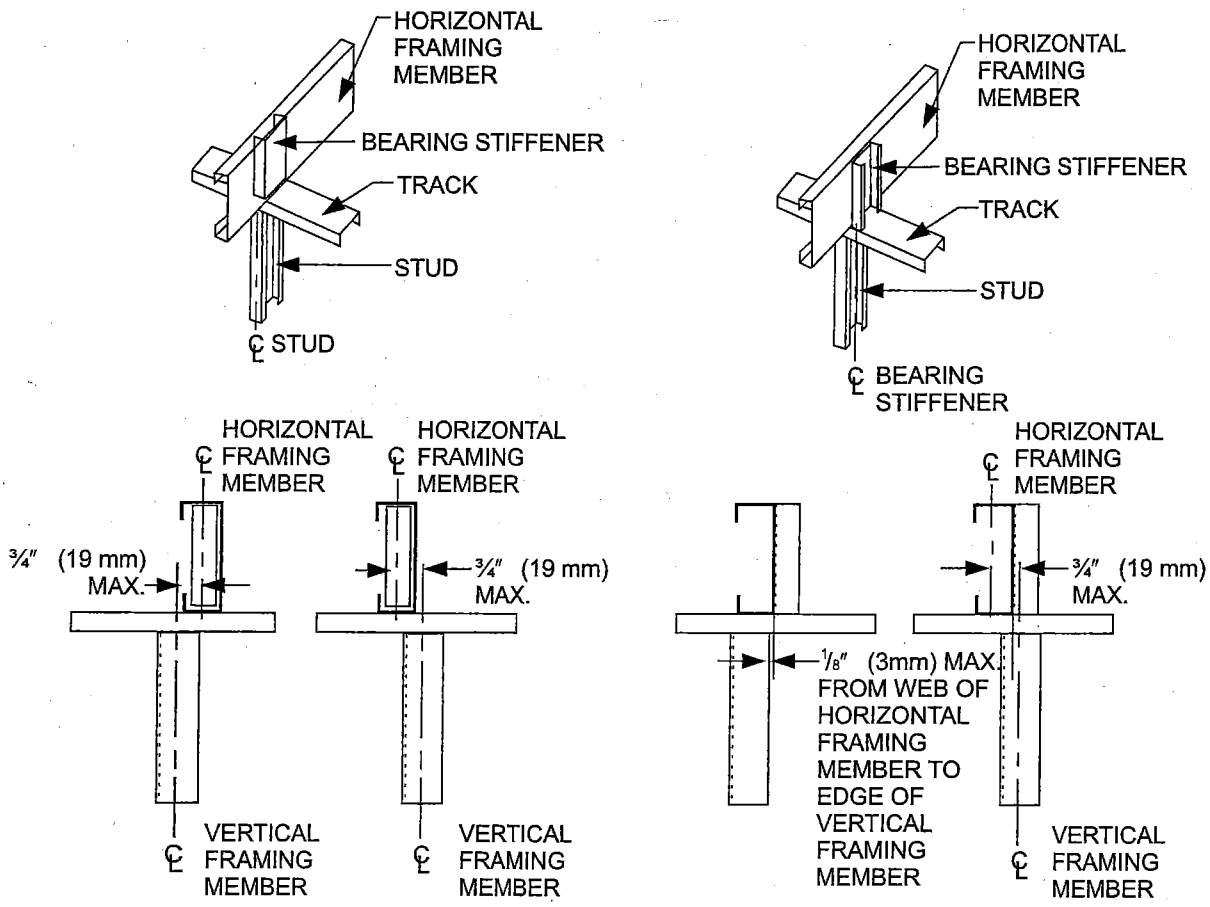

For SI: 1 inch = 25.4 mm.

FIGURE R505.1.2
IN-LINE FRAMING

TABLE R505.2(1)
COLD-FORMED STEEL JOIST SIZES

MEMBER DESIGNATION[a]	WEB DEPTH (inches)	MINIMUM FLANGE WIDTH (inches)	MAXIMUM FLANGE WIDTH (inches)	MINIMUM LIP SIZE (inches)
550S162-t	5.5	1.625	2	0.5
800S162-t	8	1.625	2	0.5
1000S162-t	10	1.625	2	0.5
1200S162-t	12	1.625	2	0.5

For SI: 1 inch = 25.4 mm, 1 mil = 0.0254 mm.

a. The member designation is defined by the first number representing the member depth in 0.01 inch, the letter "S" representing a stud or joist member, the second number representing the flange width in 0.01 inch, and the letter "t" shall be a number representing the minimum base metal thickness in mils [See Table R505.2(2)].

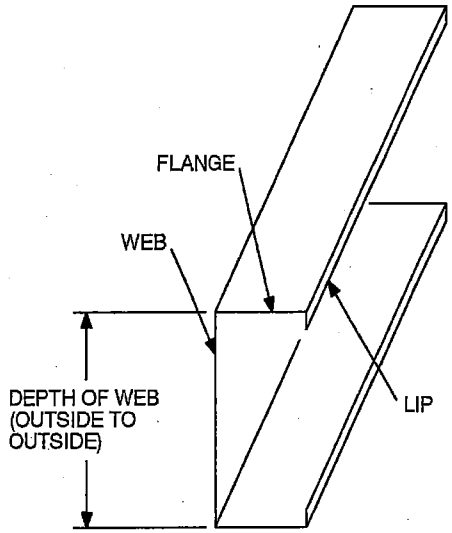

FIGURE R505.2(1)
C-SHAPED SECTION

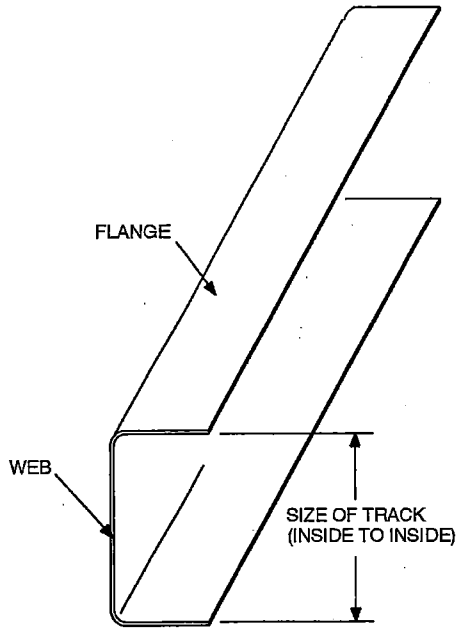

FIGURE R505.2(2)
TRACK SECTION

1. A minimum of G 60 in accordance with ASTM A 653.
2. A minimum of AZ 50 in accordance with ASTM A 792.

R505.2.4 Fastening requirements. Screws for steel-to-steel connections shall be installed with a minimum edge distance and center-to-center spacing of $^1/_2$ inch (12.7 mm), shall be self-drilling tapping, and shall conform to ASTM C 1513. Floor sheathing shall be attached to cold-formed steel joists with minimum No. 8 self-drilling tapping screws that conform to ASTM C 1513. Screws attaching floor-sheathing to cold-formed steel joists shall have a minimum head diameter of 0.292 inch (7.4 mm) with countersunk heads and shall be installed with a minimum edge distance of $^3/_8$ inch (9.5 mm). Gypsum board ceilings shall be attached to cold-formed steel joists with minimum No. 6 screws conforming to ASTM C 954 or ASTM C 1513 with a bugle head style and shall be installed in accordance with Section R702. For all connections, screws shall extend through the steel a minimum of three exposed threads. All fasteners shall have rust inhibitive coating suitable for the installation in which they are being used, or be manufactured from material not susceptible to corrosion.

Where No. 8 screws are specified in a steel-to-steel connection, the required number of screws in the connection is permitted to be reduced in accordance with the reduction factors in Table R505.2.4 when larger screws are used or when one of the sheets of steel being connected is thicker than 33 mils (0.84 mm). When applying the reduction factor, the resulting number of screws shall be rounded up.

TABLE R505.2.4
SCREW SUBSTITUTION FACTOR

SCREW SIZE	THINNEST CONNECTED STEEL SHEET (mils)	
	33	43
#8	1.0	0.67
#10	0.93	0.62
#12	0.86	0.56

For SI: 1 mil = 0.0254 mm.

R505.2.5 Web holes, web hole reinforcing and web hole patching. Web holes, web hole reinforcing, and web hole patching shall be in accordance with this section.

R505.2.5.1 Web holes. Web holes in floor joists shall comply with all of the following conditions:

1. Holes shall conform to Figure R505.2.5.1;
2. Holes shall be permitted only along the centerline of the web of the framing member;
3. Holes shall have a center-to-center spacing of not less than 24 inches (610 mm);
4. Holes shall have a web hole width not greater than 0.5 times the member depth, or $2^1/_2$ inches (64.5 mm);
5. Holes shall have a web hole length not exceeding $4^1/_2$ inches (114 mm); and
6. Holes shall have a minimum distance between the edge of the bearing surface and the edge of the web hole of not less than 10 inches (254 mm).

Framing members with web holes not conforming to the above requirements shall be reinforced in accordance with Section R505.2.5.2, patched in accordance with Section R505.2.5.3 or designed in accordance with accepted engineering practices.

R505.2.5.2 Web hole reinforcing. Reinforcement of web holes in floor joists not conforming to the require-

ments of Section R505.2.5.1 shall be permitted if the hole is located fully within the center 40 percent of the span and the depth and length of the hole does not exceed 65 percent of the flat width of the web. The reinforcing shall be a steel plate or C-shape section with a hole that does not exceed the web hole size limitations of Section R505.2.5.1 for the member being reinforced. The steel reinforcing shall be the same thickness as the receiving member and shall extend at least 1 inch (25.4 mm) beyond all edges of the hole. The steel reinforcing shall be fastened to the web of the receiving member with No. 8 screws spaced no more than 1 inch (25.4 mm) center-to-center along the edges of the patch with minimum edge distance of $^1/_2$ inch (12.7 mm).

R505.2.5.3 Hole patching. Patching of web holes in floor joists not conforming to the requirements in Section R505.2.5.1 shall be permitted in accordance with either of the following methods:

1. Framing members shall be replaced or designed in accordance with accepted engineering practices where web holes exceed the following size limits:
   1.1. The depth of the hole, measured across the web, exceeds 70 percent of the flat width of the web; or
   1.2. The length of the hole measured along the web, exceeds 10 inches (254 mm) or the depth of the web, whichever is greater.
2. Web holes not exceeding the dimensional requirements in Section R505.2.5.3, Item 1, shall be patched with a solid steel plate, stud section, or track section in accordance with Figure R505.2.5.3. The steel patch shall, as a minimum, be of the same thickness as the receiving member and shall extend at least 1 inch (25 mm) beyond all edges of the hole. The steel patch shall be fastened to the web of the receiving member with No. 8 screws spaced no more than 1 inch (25 mm) center-to-center along the edges of the patch with minimum edge distance of $^1/_2$ inch (13 mm).

R505.3 Floor construction. Cold-formed steel floors shall be constructed in accordance with this section.

R505.3.1 Floor to foundation or load-bearing wall connections. Cold-formed steel framed floors shall be anchored to foundations, wood sills or load-bearing walls in accordance with Table R505.3.1(1) and Figure R505.3.1(1), R505.3.1(2), R505.3.1(3), R505.3.1(4), R505.3.1(5) or R505.3.1(6). Anchor bolts shall be located not more than 12 inches (305 mm) from corners or the termination of bottom tracks. Continuous cold-formed steel joists supported by interior load-bearing walls shall be constructed in accordance with Figure R505.3.1(7). Lapped cold-formed steel joists shall be constructed in accordance with Figure R505.3.1(8). End floor joists constructed on foundation walls parallel to the joist span shall be doubled unless a C-shaped bearing stiffener, sized in

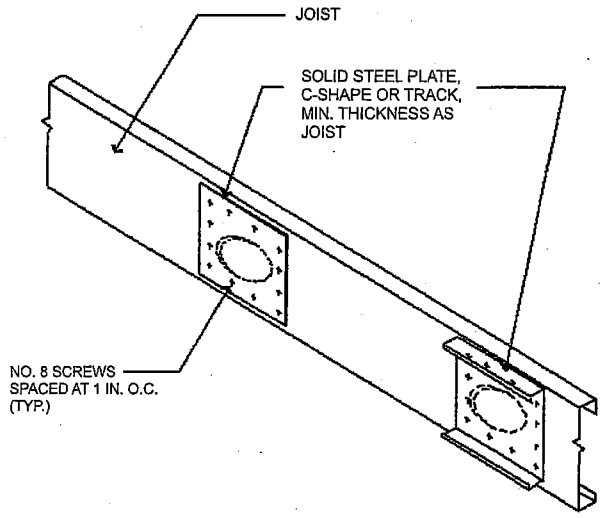

For SI: 1 inch = 25.4 mm.

FIGURE R505.2.5.3
WEB HOLE PATCH

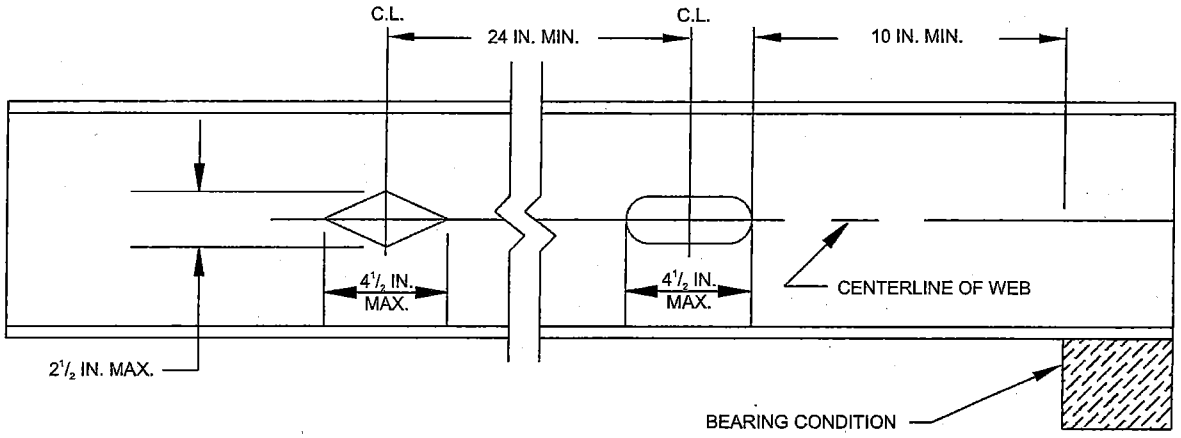

For SI: 1 inch = 25.4 mm.

FIGURE R505.2.5.1
FLOOR JOIST WEB HOLES

3852

TABLE R505.3.1(1)
FLOOR TO FOUNDATION OR BEARING WALL CONNECTION REQUIREMENTS[a, b]

FRAMING CONDITION	BASIC WIND SPEED (mph) AND EXPOSURE	
	85 mph Exposure C or less than 110 mph Exposure B	Less than 110 mph Exposure C
Floor joist to wall track of exterior wall per Figure R505.3.1(1)	2-No. 8 screws	3-No. 8 screws
Rim track or end joist to load-bearing wall top track per Figure R505.3.1(1)	1-No. 8 screw at 24 inches o.c.	1-No. 8 screw at 24 inches o.c.
Rim track or end joist to wood sill per Figure R505.3.1(2)	Steel plate spaced at 4 feet o.c. with 4-No. 8 screws and 4-10d or 6-8d common nails	Steel plate spaced at 2 feet o.c. with 4-No. 8 screws and 4-10d or 6-8d common nails
Rim track or end joist to foundation per Figure R505.3.1(3)	$^1/_2$ inch minimum diameter anchor bolt and clip angle spaced at 6 feet o.c. with 8-No. 8 screws	$^1/_2$ inch minimum diameter anchor bolt and clip angle spaced at 4 feet o.c. with 8-No. 8 screws
Cantilevered joist to foundation per Figure R505.3.1(4)	$^1/_2$ inch minimum diameter anchor bolt and clip angle spaced at 6 feet o.c. with 8-No. 8 screws	$^1/_2$ inch minimum diameter anchor bolt and clip angle spaced at 4 feet o.c. with 8-No. 8 screws
Cantilevered joist to wood sill per Figure R505.3.1(5)	Steel plate spaced at 4 feet o.c. with 4-No. 8 screws and 4-10d or 6-8d common nails	Steel plate spaced at 2 feet o.c. with 4-No. 8 screws and 4-10d or 6-8d common nails
Cantilevered joist to exterior load-bearing wall track per Figure R505.3.1(6)	2-No. 8 screws	3-No. 8 screws

For SI: 1 inch = 25.4 mm, 1 pound per square foot = 0.0479 kPa, 1 mile per hour = 0.447 m/s, 1 foot = 304.8 mm.

a. Anchor bolts are to be located not more than 12 inches from corners or the termination of bottom tracks (e.g., at door openings or corners). Bolts extend a minimum of 15 inches into masonry or 7 inches into concrete. Anchor bolts connecting cold-formed steel framing to the foundation structure are to be installed so that the distance from the center of the bolt hole to the edge of the connected member is not less than one and one-half bolt diameters.

b. All screw sizes shown are minimum.

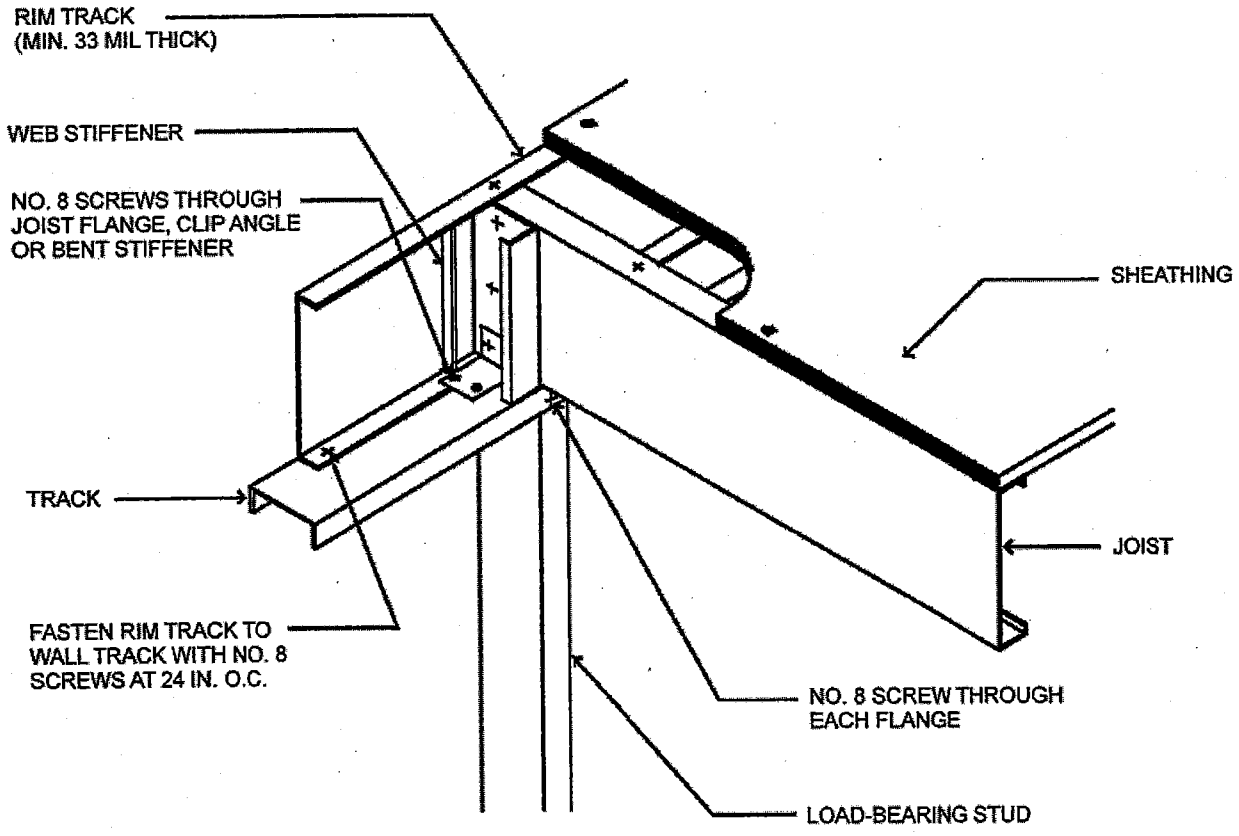

For SI: 1 mil = 0.0254 mm, 1 inch = 25.4 mm.

FIGURE 505.3.1(1)
FLOOR TO EXTERIOR LOAD-BEARING WALL STUD CONNECTION

3853

TABLE R505.3.1(2)
FLOOR FASTENING SCHEDULE[a]

DESCRIPTION OF BUILDING ELEMENTS	NUMBER AND SIZE OF FASTENERS	SPACING OF FASTENERS
Floor joist to track of an interior load-bearing wall per Figures R505.3.1(7) and R505.3.1(8)	2 No. 8 screws	Each joist
Floor joist to track at end of joist	2 No. 8 screws	One per flange or two per bearing stiffener
Subfloor to floor joists	No. 8 screws	6 in. o.c. on edges and 12 in. o.c. at intermediate supports

For SI: 1 inch = 25.4 mm.
a. All screw sizes shown are minimum.

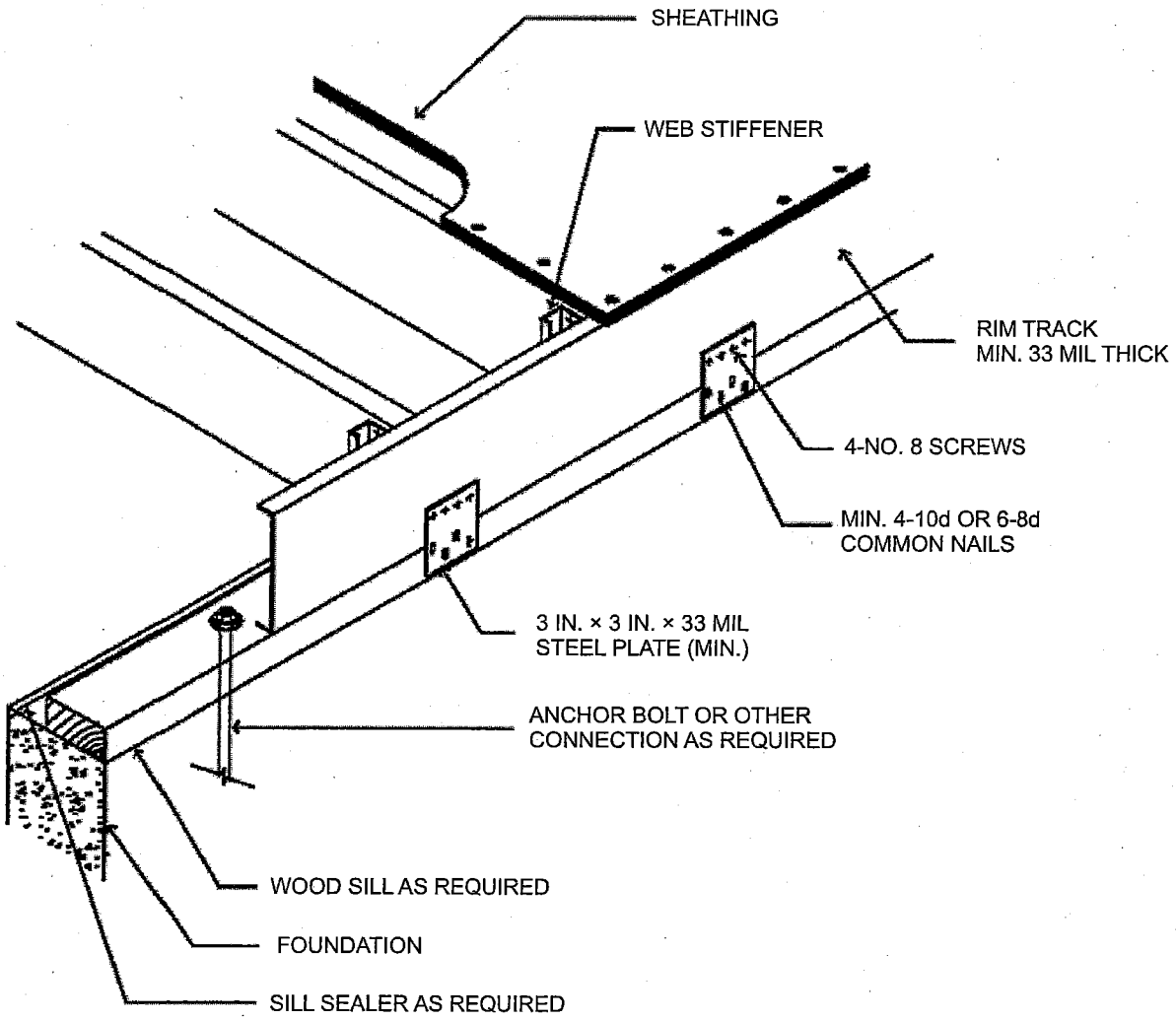

For SI: 1 mil = 0.0254 mm, 1 inch = 25.4 mm.

FIGURE R505.3.1(2)
FLOOR TO WOOD SILL CONNECTION

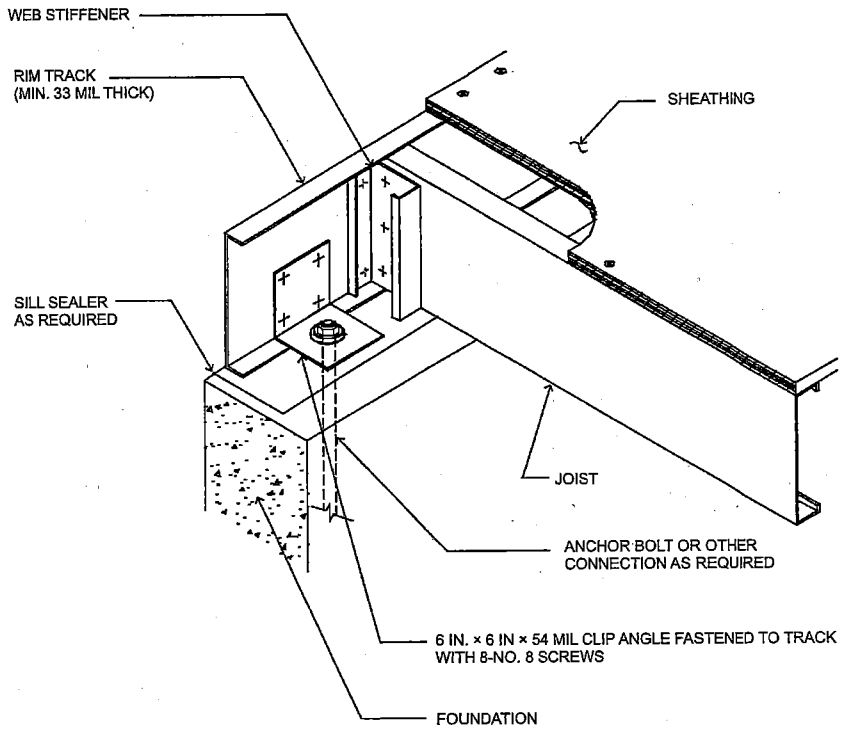

For SI: 1 mil = 0.0254 mm, 1 inch = 25.4 mm.

FIGURE R505.3.1(3)
FLOOR TO FOUNDATION CONNECTION

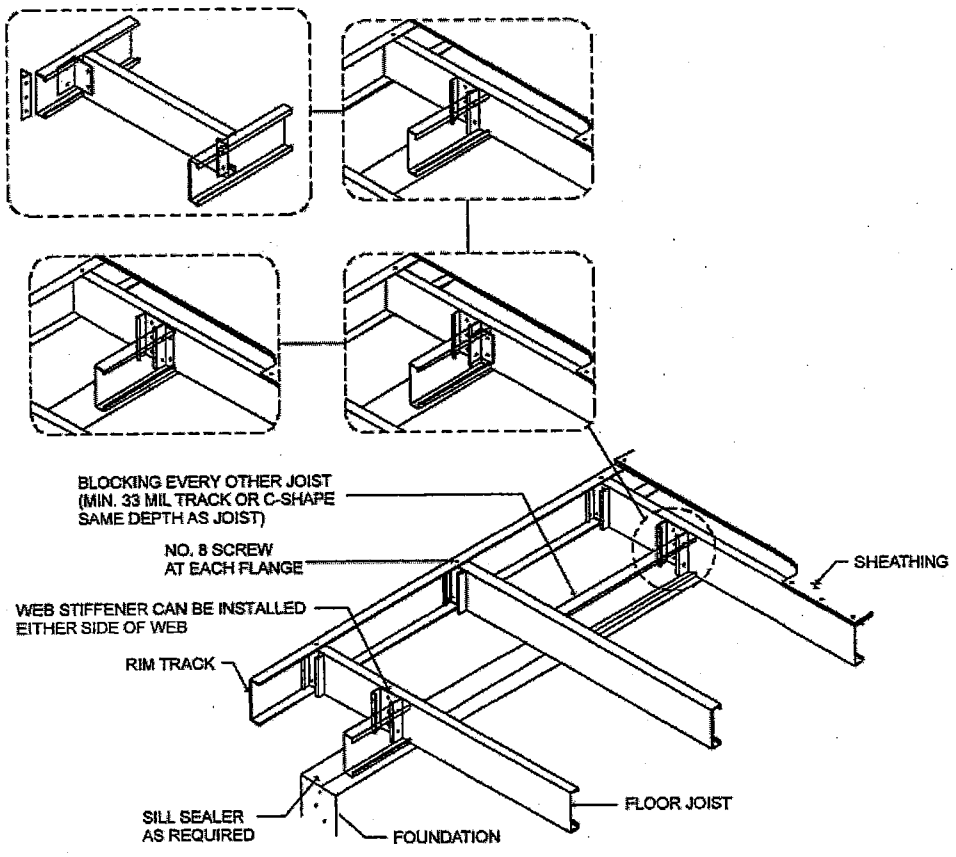

For SI: 1 mil = 0.0254 mm.

FIGURE R505.3.1(4)
CANTILEVERED FLOOR TO FOUNDATION CONNECTION

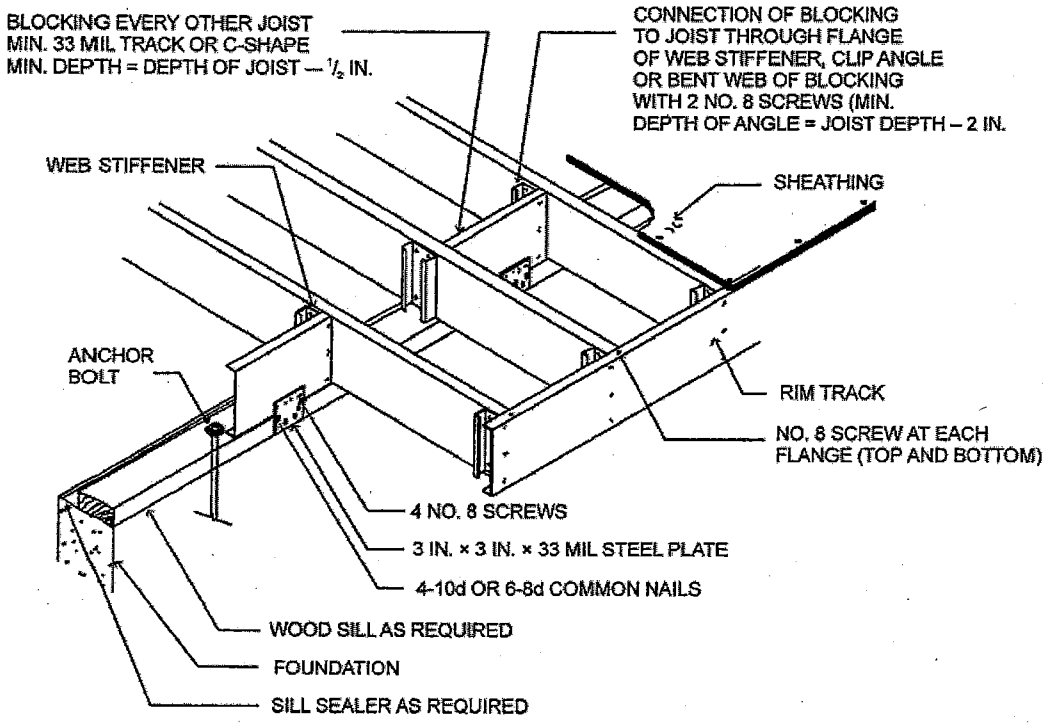

For SI: 1 mil = 0.0254 mm, 1 inch = 25.4 mm.

FIGURE R505.3.1(5)
CANTILEVERED FLOOR TO WOOD SILL CONNECTION

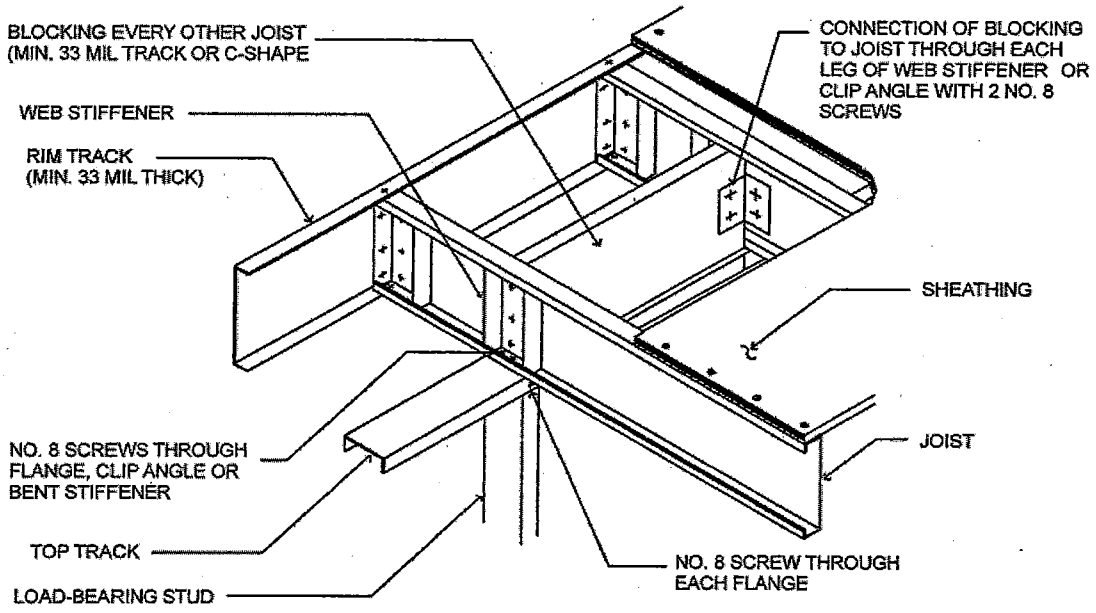

For SI: 1 mil = 0.0254 mm.

FIGURE R505.3.1(6)
CANTILEVERED FLOOR TO EXTERIOR LOAD-BEARING WALL CONNECTION

3856

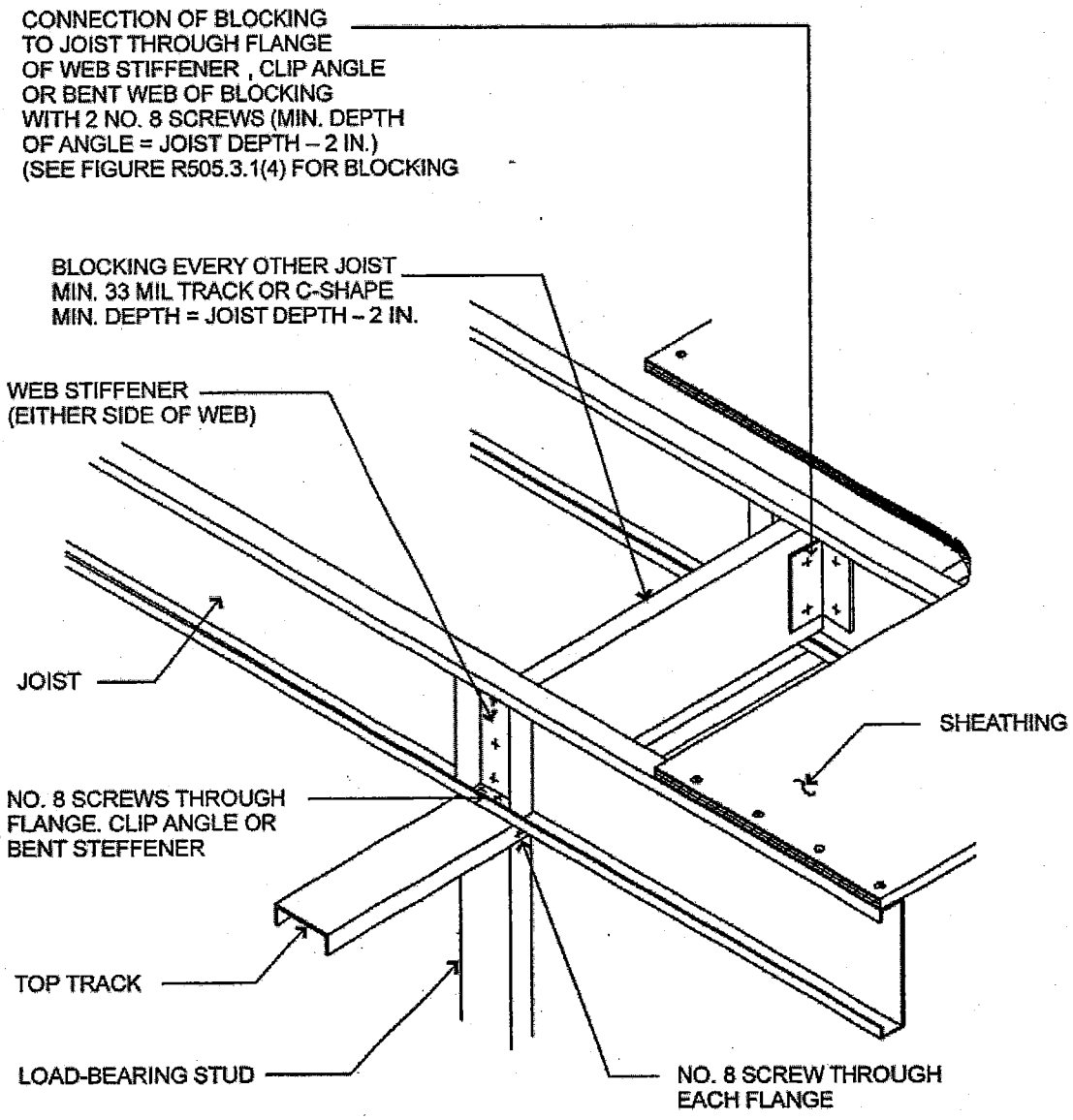

For SI: 1 mil = 0.0254 mm, 1 inch = 25.4 mm.

FIGURE R505.3.1(7)
CONTINUOUS SPAN JOIST SUPPORTED ON INTERIOR LOAD-BEARING WALL

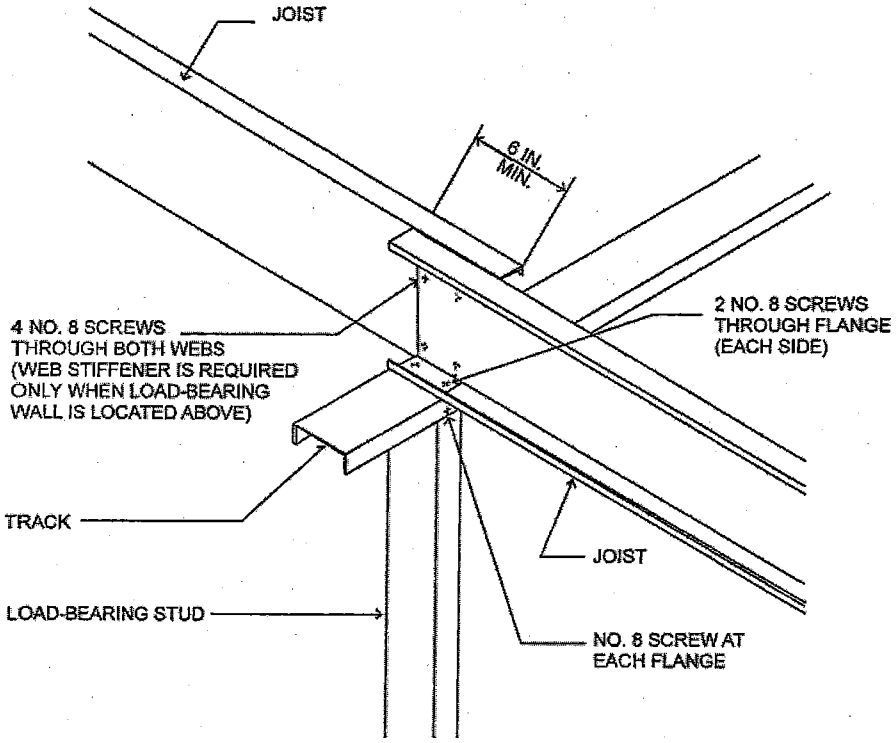

For SI: 1 inch = 25.4 mm.

FIGURE R505.3.1(8)
LAPPED JOISTS SUPPORTED ON INTERIOR LOAD-BEARING WALL

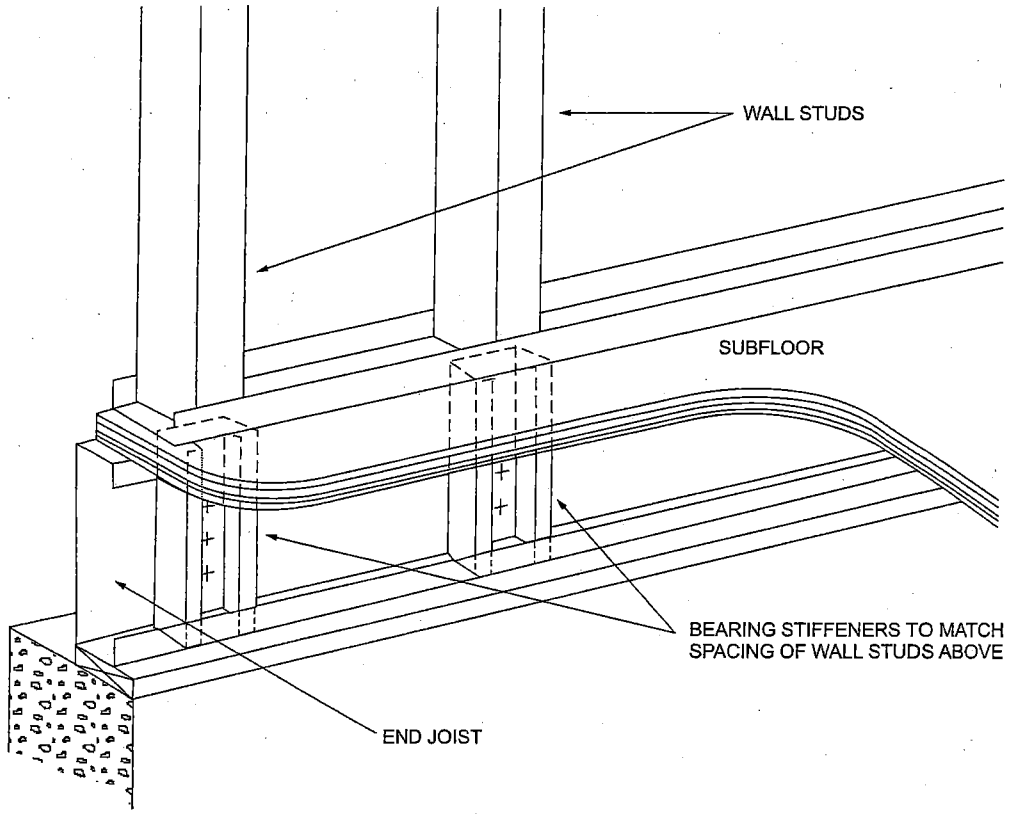

FIGURE R505.3.1(9)
BEARING STIFFENERS FOR END JOISTS

3858

accordance with Section R505.3.4, is installed web-to-web with the floor joist beneath each supported wall stud, as shown in Figure R505.3.1(9). Fastening of cold-formed steel joists to other framing members shall be in accordance with Section R505.2.4 and Table R505.3.1(2).

R505.3.2 Minimum floor joist sizes. Floor joist size and thickness shall be determined in accordance with the limits set forth in Table R505.3.2(1) for single spans, and Tables R505.3.2(2) and R505.3.2(3) for multiple spans. When continuous joist members are used, the interior bearing supports shall be located within 2 feet (610 mm) of mid-span of the cold-formed steel joists, and the individual spans shall not exceed the spans in Table R505.3.2(2) or R505.3.2(3), as applicable. Floor joists shall have a bearing support length of not less than $1^1/_2$ inches (38 mm) for exterior wall supports and $3^1/_2$ inches (89 mm) for interior wall supports. Tracks shall be a minimum of 33 mils (0.84 mm) thick except when used as part of a floor header or trimmer in accordance with Section R505.3.8. Bearing stiffeners shall be installed in accordance with Section R505.3.4.

R505.3.3 Joist bracing and blocking. Joist bracing and blocking shall be in accordance with this section.

R505.3.3.1 Joist top flange bracing. The top flanges of cold-formed steel joists shall be laterally braced by the application of floor sheathing fastened to the joists in accordance with Section R505.2.4 and Table R505.3.1(2).

R505.3.3.2 Joist bottom flange bracing/blocking. Floor joists with spans that exceed 12 feet (3658 mm) shall have the bottom flanges laterally braced in accordance with one of the following:

1. Gypsum board installed with minimum No. 6 screws in accordance with Section R702.
2. Continuous steel straps installed in accordance with Figure R505.3.3.2(1). Steel straps shall be spaced at a maximum of 12 feet (3658 mm) on center and shall be at least $1^1/_2$ inches (38 mm) in width and 33 mils (0.84 mm) in thickness. Straps shall be fastened to the bottom flange of each joist with one No. 8 screw, fastened to blocking with two No. 8 screws, and fastened at each end (of strap) with two No. 8 screws. Blocking in accordance with Figure R505.3.3.2(1) or Figure R505.3.3.2(2) shall be installed between joists at each end of the continuous strapping and at a maximum spacing of 12 feet (3658 mm) mea-

TABLE R505.3.2(1)
ALLOWABLE SPANS FOR COLD-FORMED STEEL JOISTS—SINGLE SPANS[a, b, c, d] 33 ksi STEEL

JOIST DESIGNATION	30 PSF LIVE LOAD				40 PSF LIVE LOAD			
	Spacing (inches)				Spacing (inches)			
	12	16	19.2	24	12	16	19.2	24
550S162-33	11′-7″	10′-7″	9′-6″	8′-6″	10′-7″	9′-3″	8′-6″	7′-6″
550S162-43	12′-8″	11′-6″	10′-10″	10′-2″	11′-6″	10′-5″	9′-10″	9′-1″
550S162-54	13′-7″	12′-4″	11′-7″	10′-9″	12′-4″	11′-2″	10′-6″	9′-9″
550S162-68	14′-7″	13′-3″	12′-6″	11′-7″	13′-3″	12′-0″	11′-4″	10′-6″
550S162-97	16′-2″	14′-9″	13′-10″	12′-10″	14′-9″	13′-4″	12′-7″	11′-8″
800S162-33	15′-8″	13′-11″	12′-9″	11′-5″	14′-3″	12′-5″	11′-3″	9′-0″
800S162-43	17′-1″	15′-6″	14′-7″	13′-7″	15′-6″	14′-1″	13′-3″	12′-4″
800S162-54	18′-4″	16′-8″	15′-8″	14′-7″	16′-8″	15′-2″	14′-3″	13′-3″
800S162-68	19′-9″	17′-11″	16′-10″	15′-8″	17′-11″	16′-3″	15′-4″	14′-2″
800S162-97	22′-0″	20′-0″	16′-10″	17′-5″	20′-0″	18′-2″	17′-1″	15′-10″
1000S162-43	20′-6″	18′-8″	17′-6″	15′-8″	18′-8″	16′-11″	15′-6″	13′-11″
1000S162-54	22′-1″	20′-0″	18′-10″	17′-6″	20′-0″	18′-2″	17′-2″	15′-11″
1000S162-68	23′-9″	21′-7″	20′-3″	18′-10″	21′-7″	19′-7″	18′-5″	17′-1″
1000S162-97	26′-6″	24′-1″	22′-8″	21′-0″	24′-1″	21′-10″	20′-7″	19′-1″
1200S162-43	23′-9″	20′-10″	19′-0″	16′-8″	21′-5″	18′-6″	16′-6″	13′-2″
1200S162-54	25′-9″	23′-4″	22′-0″	20′-1″	23′-4″	21′-3″	20′-0″	17′-10″
1200S162-68	27′-8″	25′-1″	23′-8″	21′-11″	25′-1″	22′-10″	21′-6″	21′-1″
1200S162-97	30′-11″	28′-1″	26′-5″	24′-6″	28′-1″	25′-6″	24′-0″	22′-3″

For SI: 1 inch = 25.4 mm, 1 foot = 304.8 mm, 1 pound per square foot = 0.0479 kPa.

a. Deflection criteria: *L*/480 for live loads, *L*/240 for total loads.

b. Floor dead load = 10 psf.

c. Table provides the maximum clear span in feet and inches.

d. Bearing stiffeners are to be installed at all support points and concentrated loads.

TABLE R505.3.2(2)
ALLOWABLE SPANS FOR COLD-FORMED STEEL JOISTS—MULTIPLE SPANS[a, b, c, d, e, f] 33 ksi STEEL

JOIST DESIGNATION	30 PSF LIVE LOAD				40 PSF LIVE LOAD			
	Spacing (inches)				Spacing (inches)			
	12	16	19.2	24	12	16	19.2	24
550S162-33	12′-1″	10′-5″	9′-6″	8′-6″	10′-9″	9′-3″	8′-6″	7′-6″
550S162-43	14′-5″	12′-5″	11′-4″	10′-2″	12′-9″	11′-11″	10′-1″	9′-0″
550S162-54	16′-3″	14′-1″	12′-10″	11′-6″	14′-5″	12′-6″	11′-5″	10′-2″
550S162-68	19′-7″	17′-9″	16′-9″	15′-6″	17′-9″	16′-2″	15′-2″	14′-1″
550S162-97	21′-9″	19′-9″	18′-7″	17′-3″	19′-9″	17′-11″	16′-10″	15′-4″
800S162-33	14′-8″	11′-10″	10′-4″	8′-8″	12′-4″	9′-11″	8′-7″	7′-2″
800S162-43	20′-0″	17′-4″	15′-9″	14′-1″	17′-9″	15′-4″	14′-0″	12′-0″
800S162-54	23′-7″	20′-5″	18′-8″	16′-8″	21′-0″	18′-2″	16′-7″	14′-10″
800S162-68	26′-5″	23′-1″	21′-0″	18′-10″	23′-8″	20′-6″	18′-8″	16′-9″
800S162-97	29′-6″	26′-10″	25′-3″	22′-8″	26′-10″	24′-4″	22′-6″	20′-2″
1000S162-43	22′-2″	18′-3″	16′-0″	13′-7″	18′-11″	15′-5″	13′-6″	11′-5″
1000S162-54	26′-2″	22′-8″	20′-8″	18′-6″	23′-3″	20′-2″	18′-5″	16′-5″
1000S162-68	31′-5″	27′-2″	24′-10″	22′-2″	27′-11″	24′-2″	22′-1″	19′-9″
1000S162-97	35′-6″	32′-3″	29′-11″	26′-9″	32′-3″	29′-2″	26′-7″	23′-9″
1200S162-43	21′-8″	17′-6″	15′-3″	12′-10″	18′-3″	14′-8″	12′-8″	10′-6″
1200S162-54	28′-5″	24′-8″	22′-6″	19′-6″	25′-3″	21′-11″	19′-4″	16′-6″
1200S162-68	33′-7″	29′-1″	26′-6″	23′-9″	29′-10″	25′-10″	23′-7″	21′-1″
1200S162-97	41′-5″	37′-8″	34′-6″	30′-10″	37′-8″	33′-6″	30′-7″	27′-5″

For SI: 1 inch = 25.4 mm, 1 foot = 304.8 mm, 1 pound per square foot = 0.0479 kPa.

a. Deflection criteria: *L*/480 for live loads, *L*/240 for total loads.

b. Floor dead load = 10 psf.

c. Table provides the maximum clear span in feet and inches to either side of the interior support.

d. Interior bearing supports for multiple span joists consist of structural (bearing) walls or beams.

e. Bearing stiffeners are to be installed at all support points and concentrated loads.

f. Interior supports shall be located within 2 feet of mid-span provided that each of the resulting spans does not exceed the appropriate maximum span shown in the table above.

TABLE R505.3.2(3)
ALLOWABLE SPANS FOR COLD-FORMED STEEL JOISTS—MULTIPLE SPANS[a, b, c, d, e, f] 50 ksi STEEL

JOIST DESIGNATION	30 PSF LIVE LOAD				40 PSF LIVE LOAD			
	Spacing (inches)				Spacing (inches)			
	12	16	19.2	24	12	16	19.2	24
550S162-33	13′-11″	12′-0″	11′-0″	9′-3″	12′-3″	10′-8″	9′-7″	8′-4″
550S162-43	16′-3″	14′-1″	12′-10″	11′-6″	14′-6″	12′-6″	11′-5″	10′-3″
550S162-54	18′-2″	16′-6″	15′-4″	13′-8″	16′-6″	14′-11″	13′-7″	12′-2″
550S162-68	19′-6″	17′-9″	16′-8″	15′-6″	17′-9″	16′-1″	15′-2″	14′-0″
550S162-97	21′-9″	19′-9″	18′-6″	17′-2″	19′-8″	17′-10″	16′-8″	15′-8″
800S162-33	15′-6″	12′-6″	10′-10″	9′-1″	13′-0″	10′-5″	8′-11″	6′-9″
800S162-43	22′-0″	19′-1″	17′-5″	15′-0″	19′-7″	16′-11″	14′-10″	12′-8″
800S162-54	24′-6″	22′-4″	20′-6″	17′-11″	22′-5″	19′-9″	17′-11″	15′-10″
800S162-68	26′-6″	24′-1″	22′-8″	21′-0″	24′-1″	21′-10″	20′-7″	19′-2″
800S162-97	29′-9″	26′-8″	25′-2″	23′-5″	26′-8″	24′-3″	22′-11″	21′-4″
1000S162-43	23′-6″	19′-2″	16′-9″	14′-2″	19′-11″	16′-2″	14′-0″	11′-9″
1000S162-54	28′-2″	23′-10″	21′-7″	18′-11″	24′-8″	20′-11″	18′-9″	18′-4″
1000S162-68	31′-10″	28′-11″	27′-2″	25′-3″	28′-11″	26′-3″	24′-9″	22′-9″
1000S162-97	35′-4″	32′-1″	30′-3″	28′-1″	32′-1″	29′-2″	27′-6″	25′-6″
1200S162-43	22′-11″	18′-5″	16′-0″	13′-4″	19′-2″	15′-4″	13′-2″	10′-6″
1200S162-54	32′-8″	28′-1″	24′-9″	21′-2″	29′-0″	23′-10″	20′-11″	17′-9″
1200S162-68	37′-1″	32′-5″	29′-4″	25′-10″	33′-4″	28′-6″	25′-9″	22′-7″
1200S162-97	41′-2″	37′-6″	35′-3″	32′-9″	37′-6″	34′-1″	32′-1″	29′-9″

For SI: 1 inch = 25.4 mm, 1 foot = 304.8 mm, 1 pound per square foot = 0.0479 kPa.

a. Deflection criteria: *L*/480 for live loads, *L*/240 for total loads.

b. Floor dead load = 10 psf.

c. Table provides the maximum clear span in feet and inches to either side of the interior support.

d. Interior bearing supports for multiple span joists consist of structural (bearing) walls or beams.

e. Bearing stiffeners are to be installed at all support points and concentrated loads.

f. Interior supports shall be located within 2 feet of mid-span provided that each of the resulting spans does not exceed the appropriate maximum span shown in the table above.

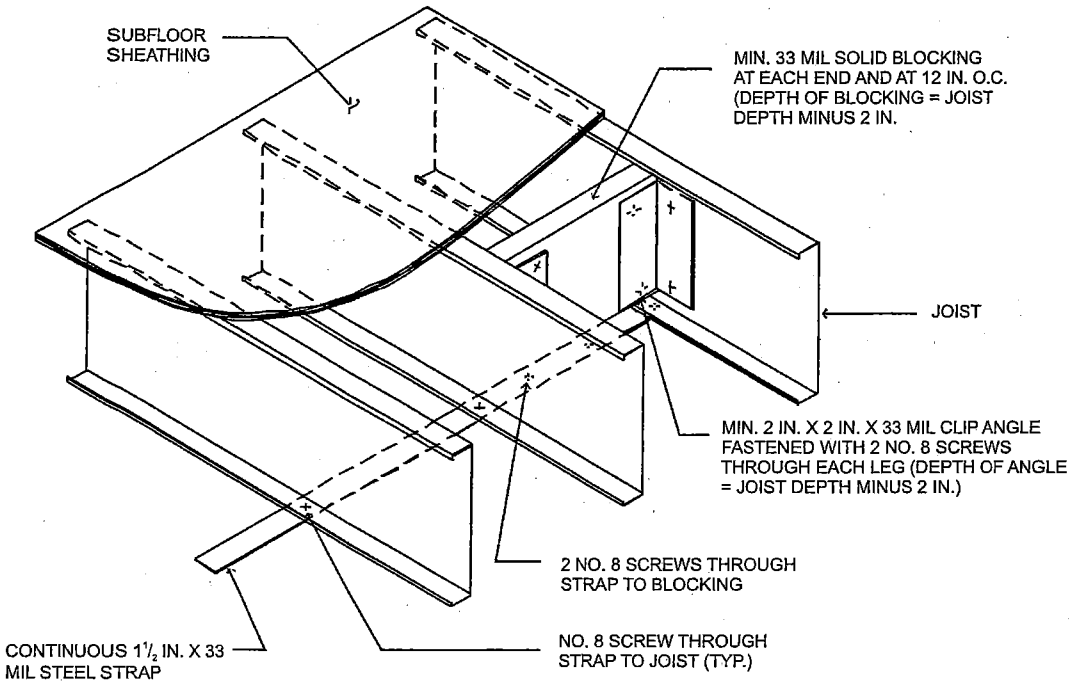

For SI: 1 mil = 0.0254, 1 inch = 25.4 mm.

FIGURE R505.3.3.2(1)
JOIST BLOCKING (SOLID)

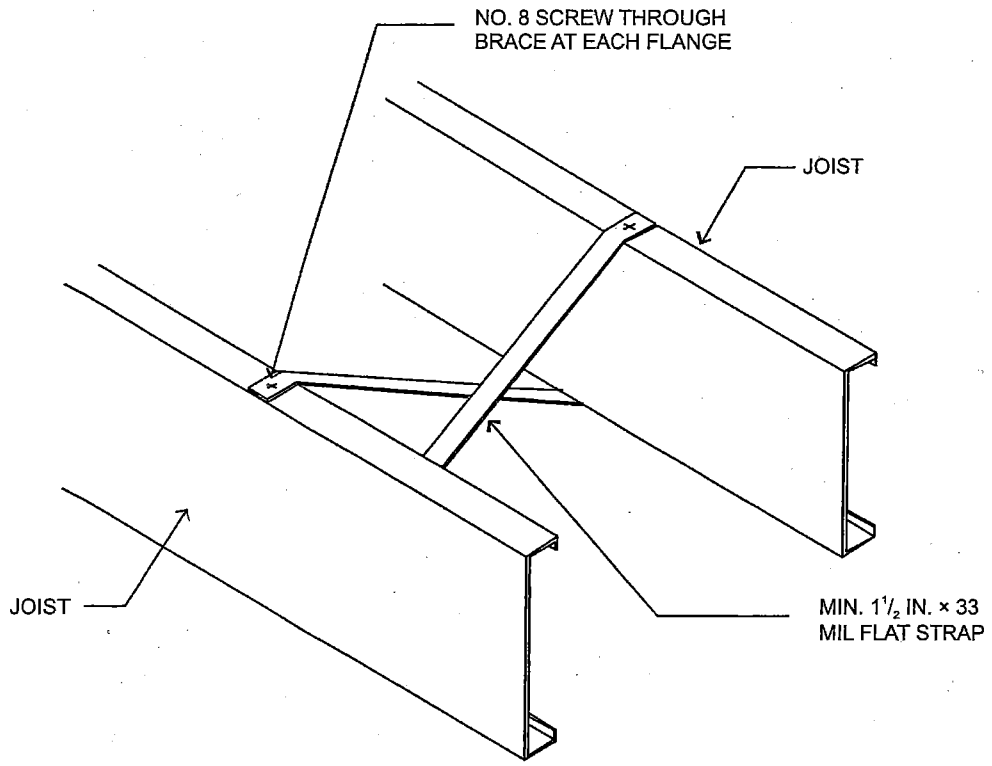

For SI: 1 mil = 0.0254, 1 inch = 25.4 mm.

FIGURE R505.3.3.2(2)
JOIST BLOCKING (STRAP)

sured along the continuous strapping (perpendicular to the joist run). Blocking shall also be located at the termination of all straps. As an alternative to blocking at the ends, anchoring the strap to a stable building component with two No. 8 screws shall be permitted.

R505.3.3.3 Blocking at interior bearing supports. Blocking is not required for continuous back-to-back floor joists at bearing supports. Blocking shall be installed between every other joist for single continuous floor joists across bearing supports in accordance with Figure R505.3.1(7). Blocking shall consist of C-shape or track section with a minimum thickness of 33 mils (0.84 mm). Blocking shall be fastened to each adjacent joist through a 33-mil (0.84 mm) clip angle, bent web of blocking or flanges of web stiffeners with two No. 8 screws on each side. The minimum depth of the blocking shall be equal to the depth of the joist minus 2 inches (51 mm). The minimum length of the angle shall be equal to the depth of the joist minus 2 inches (51 mm).

R505.3.3.4 Blocking at cantilevers. Blocking shall be installed between every other joist over cantilever bearing supports in accordance with Figure R505.3.1(4), R505.3.1(5) or R505.3.1(6). Blocking shall consist of C-shape or track section with minimum thickness of 33 mils (0.84 mm). Blocking shall be fastened to each adjacent joist through bent web of blocking, 33 mil clip angle or flange of web stiffener with two No. 8 screws at each end. The depth of the blocking shall be equal to the depth of the joist. The minimum length of the angle shall be equal to the depth of the joist minus 2 inches (51 mm). Blocking shall be fastened through the floor sheathing and to the support with three No. 8 screws (top and bottom).

R505.3.4 Bearing stiffeners. Bearing stiffeners shall be installed at each joist bearing location in accordance with this section, except for joists lapped over an interior support not carrying a load-bearing wall above. Floor joists supporting jamb studs with multiple members shall have two bearing stiffeners in accordance with Figure R505.3.4(1). Bearing stiffeners shall be fabricated from a C-shaped, track or clip angle member in accordance with the one of following:

1. C-shaped bearing stiffeners:
   - 1.1. Where the joist is not carrying a load-bearing wall above, the bearing stiffener shall be a minimum 33 mil (0.84 mm) thickness.
   - 1.2. Where the joist is carrying a load-bearing wall above, the bearing stiffener shall be at least the same designation thickness as the wall stud above.
2. Track bearing stiffeners:
   - 2.1. Where the joist is not carrying a load-bearing wall above, the bearing stiffener shall be a minimum 43 mil (1.09 mm) thickness.
   - 2.2. Where the joist is carrying a load-bearing wall above, the bearing stiffener shall be at least one designation thickness greater than the wall stud above.
3. Clip angle bearing stiffeners: Where the clip angle bearing stiffener is fastened to both the web of the member it is stiffening and an adjacent rim track using the fastener pattern shown in Figure R505.3.4(2), the bearing stiffener shall be a minimum 2 inch by 2 inch (51 mm by 51 mm) angle sized in accordance with Tables R505.3.4(1), R505.3.4(2), R505.3.4(3), and R505.3.4(4).

The minimum length of a bearing stiffener shall be the depth of member being stiffened minus $^3/_8$ inch (9.5 mm). Each bearing stiffener shall be fastened to the web of the member it is stiffening as shown in Figure R505.3.4(2). Each clip angle bearing stiffener shall also be fastened to the web of the adjacent rim track using the fastener pattern shown in Figure R505.3.4(2). No. 8 screws shall be used for C-shaped and track members of any thickness and for clip angle members with a designation thickness less than or equal to 54. No. 10 screws shall be used for clip angle members with a designation thickness greater than 54.

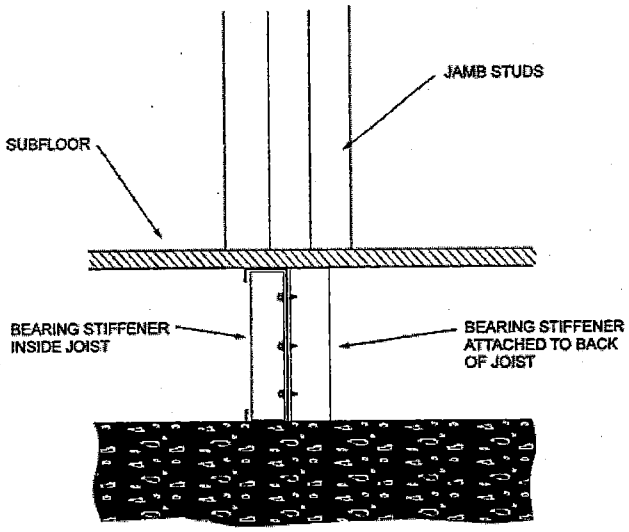

FIGURE R505.3.4(1)
BEARING STIFFENERS UNDER JAMB STUDS

R505.3.5 Cutting and notching. Flanges and lips of load-bearing cold-formed steel floor framing members shall not be cut or notched.

R505.3.6 Floor cantilevers. Floor cantilevers for the top floor of a two- or three-story building or the first floor of a one-story building shall not exceed 24 inches (610 mm). Cantilevers, not exceeding 24 inches (610 mm) and supporting two stories and roof (i.e., first floor of a two-story building), shall also be permitted provided that all cantilevered joists are doubled (nested or back-to-back). The doubled cantilevered joists shall extend a minimum of 6 feet (1829 mm) toward the inside and shall be fastened with a minimum of two No. 8 screws spaced at 24 inches

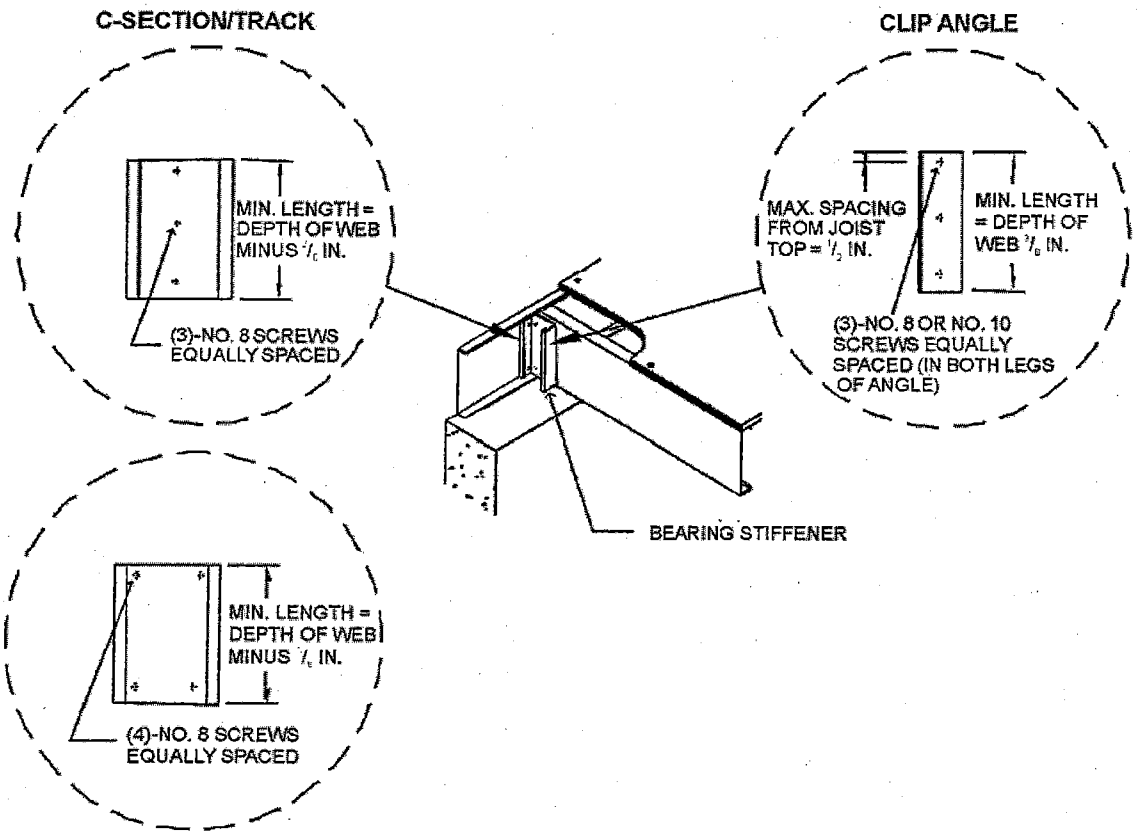

For SI: 1 inch = 25.4 mm.

FIGURE R505.3.4(2)
BEARING STIFFENER

TABLE R505.3.4(1)
CLIP ANGLE BEARING STIFFENERS
(20 psf equivalent snow load)

JOIST DESIGNATION	MINIMUM THICKNESS (mils) OF 2 INCH × 2 INCH CLIP ANGLE											
	Top floor				Bottom floor in 2 story Middle floor in 3 story				Bottom floor in 3 story			
	Joist spacing (inches)				Joist spacing (inches)				Joist spacing (inches)			
	12	16	19.2	24	12	16	19.2	24	12	16	19.2	24
800S162-33	43	43	43	43	43	54	68	68	68	97	97	—
800S162-43	43	43	43	43	54	54	68	68	97	97	97	97
800S162-54	43	43	43	43	43	54	68	68	68	97	97	—
800S162-68	43	43	43	43	43	43	54	68	54	97	97	—
800S162-97	43	43	43	43	43	43	43	43	43	43	54	97
1000S162-43	43	43	43	43	54	68	97	97	97	—	—	—
1000S162-54	43	43	43	43	54	68	68	97	97	97	—	—
1000S162-68	43	43	43	43	54	68	97	97	97	—	—	—
1000S162-97	43	43	43	43	43	43	43	54	43	68	97	—
1200S162-43	43	54	54	54	97	97	97	97	—	—	—	—
1200S162-54	54	54	54	54	97	97	97	97	—	—	—	—
1200S162-68	43	43	54	54	68	97	97	97	—	—	—	—
1200S162-97	43	43	43	43	43	54	68	97	97	—	—	—

For SI: 1 mil = 0.254 mm, 1 inch = 25.4 mm, 1 pound per square foot = 0.0479 kPa.

TABLE R505.3.4(2)
CLIP ANGLE BEARING STIFFENERS
(30 psf equivalent snow load)

JOIST DESIGNATION	MINIMUM THICKNESS (mils) OF 2 INCH × 2 INCH CLIP ANGLE											
	Top floor				Bottom floor in 2 story Middle floor in 3 story				Bottom floor in 3 story			
	Joist spacing (inches)				Joist spacing (inches)				Joist spacing (inches)			
	12	16	19.2	24	12	16	19.2	24	12	16	19.2	24
800S162-33	43	43	43	43	54	68	68	97	97	97	97	—
800S162-43	43	43	43	54	68	68	68	97	97	97	97	—
800S162-54	43	43	43	43	54	68	68	97	97	97	—	—
800S162-68	43	43	43	43	43	54	68	97	68	97	97	—
800S162-97	43	43	43	43	43	43	43	43	43	43	68	97
1000S162-43	54	54	54	54	68	97	97	97	97	—	—	—
1000S162-54	54	54	54	54	68	97	97	97	97	—	—	—
1000S162-68	43	43	54	68	68	97	97	—	97	—	—	—
1000S162-97	43	43	43	43	43	43	54	68	54	97	—	—
1200S162-43	54	68	68	68	97	97	97	—	—	—	—	—
1200S162-54	68	68	68	68	97	97	—	—	—	—	—	—
1200S162-68	68	68	68	68	97	97	97	—	—	—	—	—
1200S162-97	43	43	43	43	54	68	97	—	97	—	—	—

For SI: 1 mil = 0.0254 mm, 1 inch = 25.4 mm, 1 pound per square foot = 0.0479 kPa.

TABLE R505.3.4(3)
CLIP ANGLE BEARING STIFFENERS
(50 psf equivalent snow load)

JOIST DESIGNATION	MINIMUM THICKNESS (mils) OF 2 INCH × 2 INCH CLIP ANGLE											
	Top floor				Bottom floor in 2 story Middle floor in 3 story				Bottom floor in 3 story			
	Joist spacing (inches)				Joist spacing (inches)				Joist spacing (inches)			
	12	16	19.2	24	12	16	19.2	24	12	16	19.2	24
800S162-33	54	54	54	54	68	97	97	97	97	—	—	—
800S162-43	68	68	68	68	97	97	97	97	—	—	—	—
800S162-54	54	68	68	68	97	97	97	97	—	—	—	—
800S162-68	43	43	54	54	68	97	97	97	97	—	—	—
800S162-97	43	43	43	43	43	43	43	54	54	68	97	—
1000S162-43	97	68	68	68	97	97	97	97	—	—	—	—
1000S162-54	97	97	68	68	97	97	97	—	—	—	—	—
1000S162-68	68	97	97	97	97	—	—	—	—	—	—	—
1000S162-97	43	43	43	43	54	68	97	97	—	—	—	—
1200S162-43	97	97	97	97	—	—	—	—	—	—	—	—
1200S162-54	—	97	97	97	—	—	—	—	—	—	—	—
1200S162-68	97	97	97	97	—	—	—	—	—	—	—	—
1200S162-97	54	68	68	97	97	—	—	—	—	—	—	—

For SI: 1 mil = 0.0254 mm, 1 inch = 25.4 mm, 1 pound per square foot = 0.0479 kPa.

TABLE R505.3.4(4)
CLIP ANGLE BEARING STIFFENERS
(70 psf equivalent snow load)

JOIST DESIGNATION	MINIMUM THICKNESS (mils) OF 2 INCH × 2 INCH CLIP ANGLE											
	Top floor				Bottom floor in 2 story Middle floor in 3 story				Bottom floor in 3 story			
	Joist spacing (inches)				Joist spacing (inches)				Joist spacing (inches)			
	12	16	19.2	24	12	16	19.2	24	12	16	19.2	24
800S162-33	68	68	68	68	97	97	97	97	—	—	—	—
800S162-43	97	97	97	97	97	97	97	—	—	—	—	—
800S162-54	97	97	97	97	97	—	—	—	—	—	—	—
800S162-68	68	68	68	97	97	97	97	—	—	—	—	—
800S162-97	43	43	43	43	43	54	68	97	97	97	—	—
1000S162-43	97	97	97	97	—	—	—	—	—	—	—	—
1000S162-54	—	97	97	97	—	—	—	—	—	—	—	—
1000S162-68	97	97	—	—	—	—	—	—	—	—	—	—
1000S162-97	68	68	68	68	97	97	—	—	—	—	—	—
1200S162-43	97	97	97	97	—	—	—	—	—	—	—	—
1200S162-54	—	—	—	—	—	—	—	—	—	—	—	—
1200S162-68	—	—	—	—	—	—	—	—	—	—	—	—
1200S162-97	97	97	97	—	—	—	—	—	—	—	—	—

For SI: 1 mil = 0.0254 mm, 1 inch = 25.4 mm, 1 pound per square foot = 0.0479 kPa.

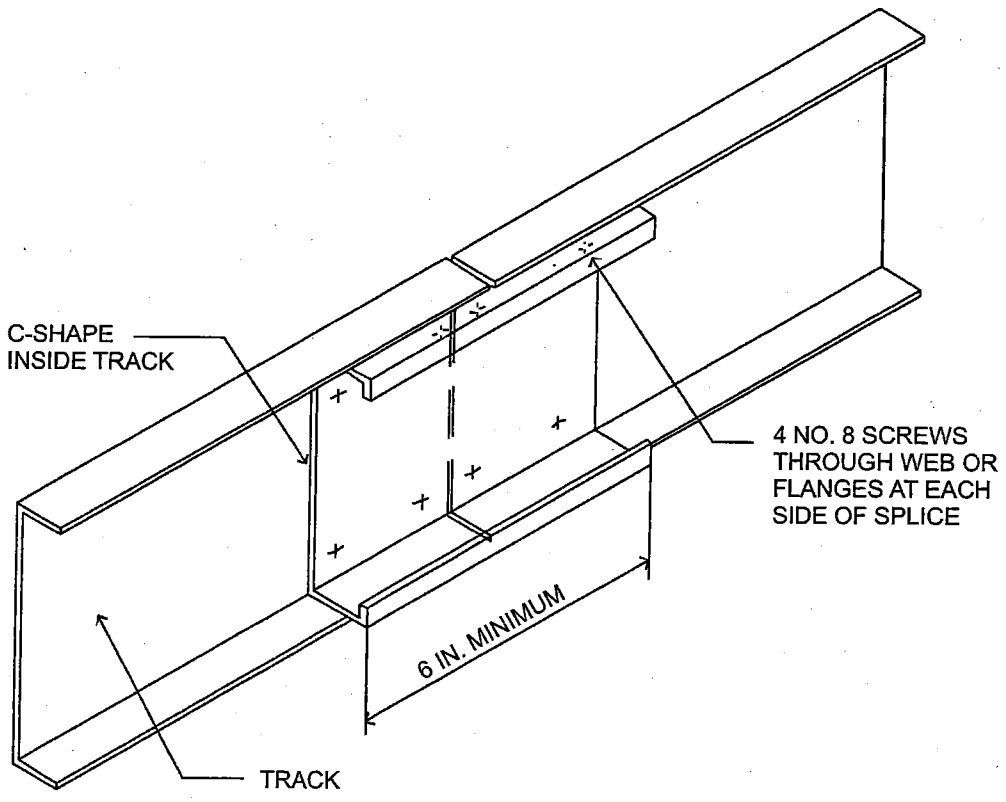

For SI: 1 inch = 25.4 mm.

FIGURE R505.3.7
TRACK SPLICE

3866

(610 mm) on center through the webs (for back-to-back) or flanges (for nested joists).

R505.3.7 Splicing. Joists and other structural members shall not be spliced. Splicing of tracks shall conform to Figure R505.3.7.

R505.3.8 Framing of floor openings. Openings in floors shall be framed with header and trimmer joists. Header joist spans shall not exceed 6 feet (1829 mm) or 8 feet (2438 mm) in length in accordance with Figure R505.3.8(1) or R505.3.8(2), respectively. Header and trimmer joists shall be fabricated from joist and track members, having a minimum size and thickness at least equivalent to the adjacent floor joists and shall be installed in accordance with Figures R505.3.8(1), R505.3.8(2), R505.3.8(3), and R505.3.8(4). Each header joist shall be connected to trimmer joists with four 2 inch by 2 inch (51 mm by 51 mm) clip angles. Each clip angle shall be fastened to both the header and trimmer joists with four No. 8 screws, evenly spaced, through each leg of the clip angle. The clip angles shall have a thickness not less than that of the floor joist. Each track section for a built-up header or trimmer joist shall extend the full length of the joist (continuous).

SECTION R506
CONCRETE FLOORS (ON GROUND)

R506.1 General. Concrete slab-on-ground floors shall be designed and constructed in accordance with the provisions of this section or ACI 332. Floors shall be a minimum 3.5 inches (89 mm) thick (for expansive soils, see Section R403.1.8). The specified compressive strength of concrete shall be as set forth in Section R402.2.

R506.2 Site preparation. The area within the foundation walls shall have all vegetation, top soil and foreign material removed.

R506.2.1 Fill. Fill material shall be free of vegetation and foreign material. The fill shall be compacted to assure uniform support of the slab, and except where approved, the fill depths shall not exceed 24 inches (610 mm) for clean sand or gravel and 8 inches (203 mm) for earth.

R506.2.2 Base. A 4-inch-thick (102 mm) base course consisting of clean graded sand, gravel, crushed stone or crushed blast-furnace slag passing a 2-inch (51 mm) sieve shall be placed on the prepared subgrade when the slab is below grade.

Exception: A base course is not required when the concrete slab is installed on well-drained or sand-gravel mixture soils classified as Group I according to the United Soil Classification System in accordance with Table R405.1.

R506.2.3 Vapor retarder. A 6-mil (0.006 inch; 152 μm) polyethylene or approved vapor retarder with joints lapped not less than 6 inches (152 mm) shall be placed between the concrete floor slab and the base course or the prepared subgrade where no base course exists.

Exception: The vapor retarder may be omitted:

1. From garages, utility buildings and other unheated accessory structures.
2. For unheated storage rooms having an area of less than 70 square feet (6.5 m^2) and carports.
3. From driveways, walks, patios and other flatwork not likely to be enclosed and heated at a later date.

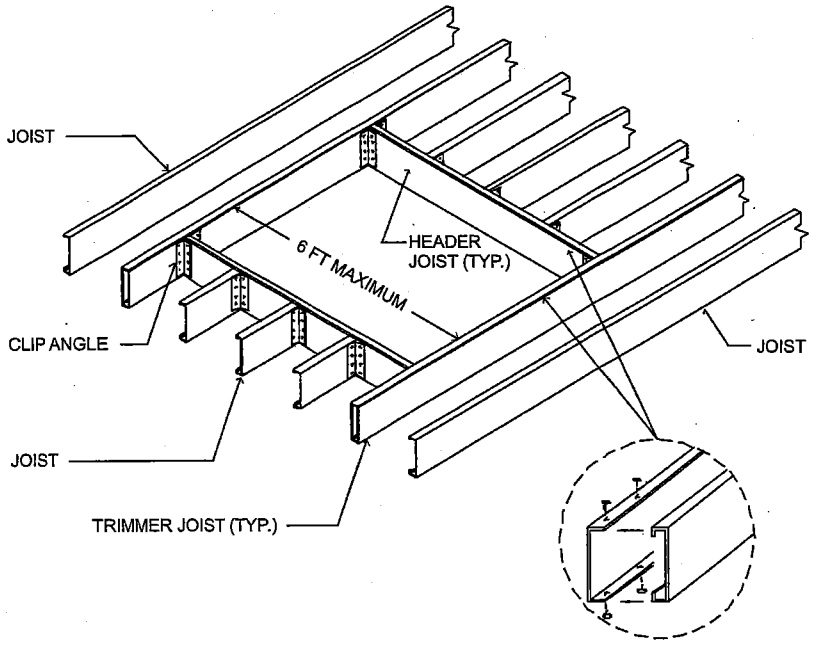

For SI: 1 foot = 304.8 mm.

FIGURE R505.3.8(1)
COLD-FORMED STEEL FLOOR CONSTRUCTION: 6-FOOT FLOOR OPENING

3867

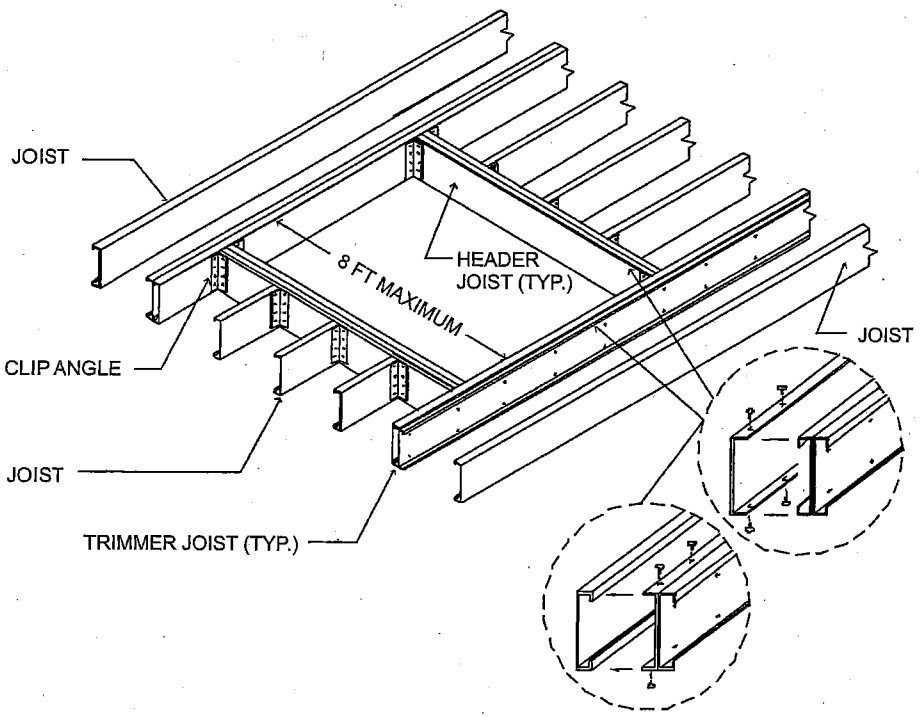

For SI: 1 foot = 304.8 mm.

FIGURE R505.3.8(2)
COLD-FORMED STEEL FLOOR CONSTRUCTION—8-FOOT FLOOR OPENING

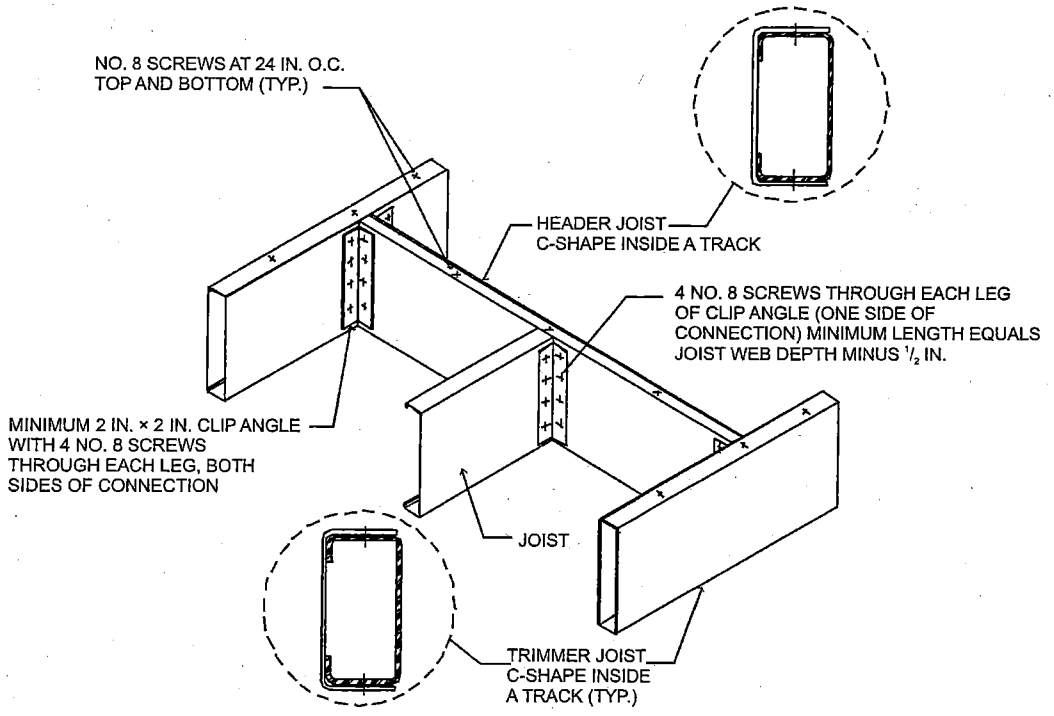

For SI: 1 inch = 25.4 mm, 1 foot = 304.8 mm.

FIGURE R505.3.8(3)
COLD-FORMED STEEL FLOOR CONSTRUCTION: FLOOR HEADER TO TRIMMER CONNECTION—6-FOOT OPENING

3868

4. Where approved by the building official, based on local site conditions.

R506.2.3.1 Capillary break. *When a vapor retarder is required, a capillary break shall be installed in accordance with the California Green Building Standards Code, Chapter 4, Division 4.5.*

R506.2.4 Reinforcement support. Where provided in slabs on ground, reinforcement shall be supported to remain in place from the center to upper one third of the slab for the duration of the concrete placement.

SECTION R507
DECKS

R507.1 Decks. Where supported by attachment to an exterior wall, decks shall be positively anchored to the primary structure and designed for both vertical and lateral loads. Such attachment shall not be accomplished by the use of toenails or nails subject to withdrawal. Where positive connection to the primary building structure cannot be verified during inspection, decks shall be self-supporting. For decks with cantilevered framing members, connections to exterior walls or other framing members, shall be designed and constructed to resist uplift resulting from the full live load specified in Table R301.5 acting on the cantilevered portion of the deck.

R507.2 Deck ledger connection to band joist. For decks supporting a total design load of 50 pounds per square foot (2394 Pa) [40 pounds per square foot (1915 Pa) live load plus 10 pounds per square foot (479 Pa) dead load], the connection between a deck ledger of pressure-preservative-treated Southern Pine, incised pressure-preservative-treated Hem-Fir or approved decay-resistant species, and a 2-inch (51 mm) nominal lumber band joist bearing on a sill plate or wall plate shall be constructed with $^1/_2$-inch (12.7 mm) lag screws or bolts with washers in accordance with Table R507.2. Lag screws, bolts and washers shall be hot-dipped galvanized or stainless steel.

R507.2.1 Placement of lag screws or bolts in deck ledgers and band joists. The lag screws or bolts in deck ledgers and band joists shall be placed in accordance with Table R507.2.1 and Figures R507.2.1(1) and R507.2.1(2).

R507.2.2 Alternate deck ledger connections. Deck ledger connections not conforming to Table R507.2 shall be designed in accordance with accepted engineering practice. Girders supporting deck joists shall not be supported on deck ledgers or band joists. Deck ledgers shall not be supported on stone or masonry veneer.

R507.2.3 Deck lateral load connection. The lateral load connection required by Section R507.1 shall be permitted to be in accordance with Figure R507.2.3. Where the lateral load connection is provided in accordance with Figure

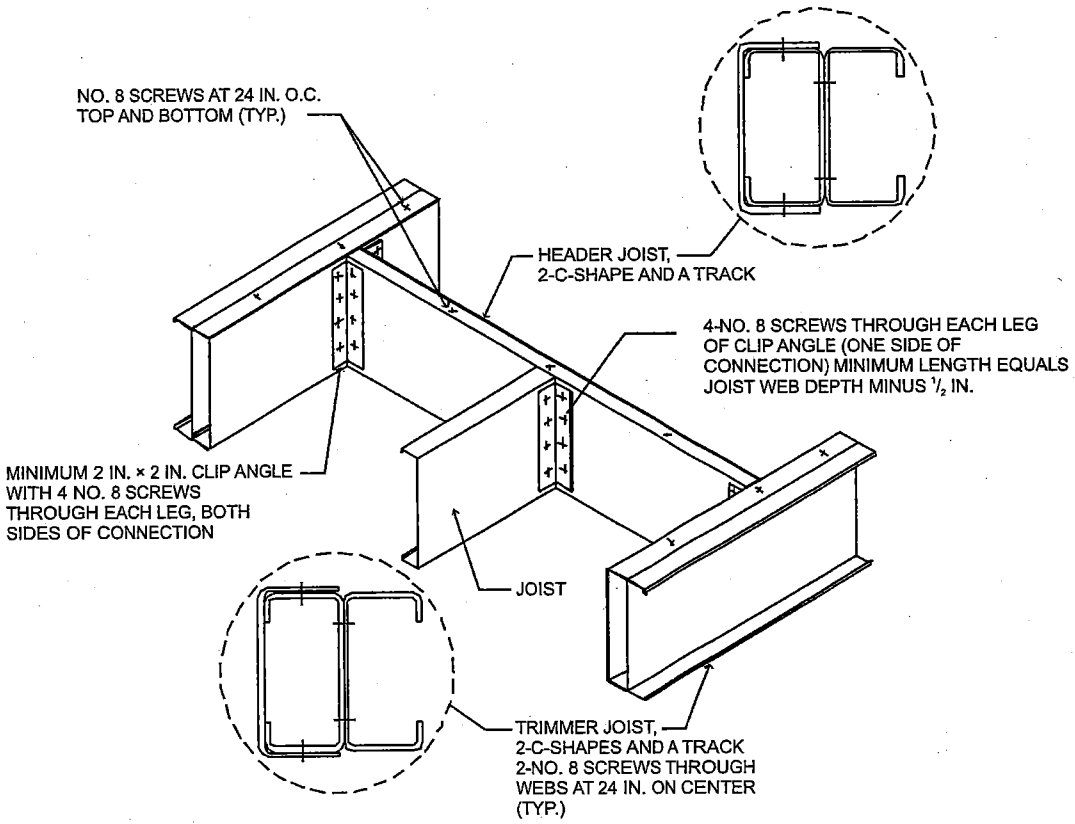

For SI: 1 inch = 25.4 mm, 1 foot = 304.8 mm.

FIGURE R505.3.8(4)
COLD-FORMED STEEL FLOOR CONSTRUCTION: FLOOR HEADER TO TRIMMER CONNECTION—8-FOOT OPENING

507.2.3, hold-down tension devices shall be installed in not less than two locations per deck, and each device shall have an allowable stress design capacity of not less than 1500 pounds (6672 N).

R507.3 Wood/plastic composites. Wood/plastic composites used in exterior deck boards, stair treads, handrails and guardrail systems shall bear a label indicating the required

TABLE R507.2
FASTENER SPACING FOR A SOUTHERN PINE OR HEM-FIR DECK LEDGER AND A 2-INCH-NOMINAL SOLID-SAWN SPRUCE-PINE-FIR BAND JOIST[c, f, g]
(Deck live load = 40 psf, deck dead load = 10 psf)

JOIST SPAN	6′ and less	6′1″ to 8′	8′1″ to 10′	10′1″ to 12′	12′1″ to 14′	14′1″ to 16′	16′1″ to 18′
Connection details	On-center spacing of fasteners[d, e]						
1/2 inch diameter lag screw with 15/32 inch maximum sheathing[a]	30	23	18	15	13	11	10
1/2 inch diameter bolt with 15/32 inch maximum sheathing	36	36	34	29	24	21	19
1/2 inch diameter bolt with 15/32 inch maximum sheathing and 1/2 inch stacked washers[b, h]	36	36	29	24	21	18	16

For SI: 1 inch = 25.4 mm, 1 foot = 304.8 mm. 1 pound per square foot = 0.0479 kPa.

a. The tip of the lag screw shall fully extend beyond the inside face of the band joist.

b. The maximum gap between the face of the ledger board and face of the wall sheathing shall be 1/2 inch.

c. Ledgers shall be flashed to prevent water from contacting the house band joist.

d. Lag screws and bolts shall be staggered in accordance with Section R507.2.1.

e. Deck ledger shall be minimum 2 × 8 pressure-preservative-treated No. 2 grade lumber, or other approved materials as established by standard engineering practice.

f. When solid-sawn pressure-preservative-treated deck ledgers are attached to a minimum 1-inch-thick engineered wood product (structural composite lumber, laminated veneer lumber or wood structural panel band joist), the ledger attachment shall be designed in accordance with accepted engineering practice.

g. A minimum 1 × 9 1/2 Douglas Fir laminated veneer lumber rimboard shall be permitted in lieu of the 2-inch nominal band joist.

h. Wood structural panel sheathing, gypsum board sheathing or foam sheathing not exceeding 1 inch in thickness shall be permitted. The maximum distance between the face of the ledger board and the face of the band joist shall be 1 inch.

TABLE 507.2.1
PLACEMENT OF LAG SCREWS AND BOLTS IN DECK LEDGERS AND BAND JOISTS

	MINIMUM END AND EDGE DISTANCES AND SPACING BETWEEN ROWS			
	TOP EDGE	BOTTOM EDGE	ENDS	ROW SPACING
Ledger[a]	2 inches[d]	3/4 inch	2 inches[b]	1 5/8 inches[b]
Band Joist[c]	3/4 inch	2 inches	2 inches[b]	1 5/8 inches[b]

For SI: 1 inch = 25.4 mm.

a. Lag screws or bolts shall be staggered from the top to the bottom along the horizontal run of the deck ledger in accordance with Figure R507.2.1(1).

b. Maximum 5 inches.

c. For engineered rim joists, the manufacturer's recommendations shall govern.

d. The minimum distance from bottom row of lag screws or bolts to the top edge of the ledger shall be in accordance with Figure R507.2.1(1).

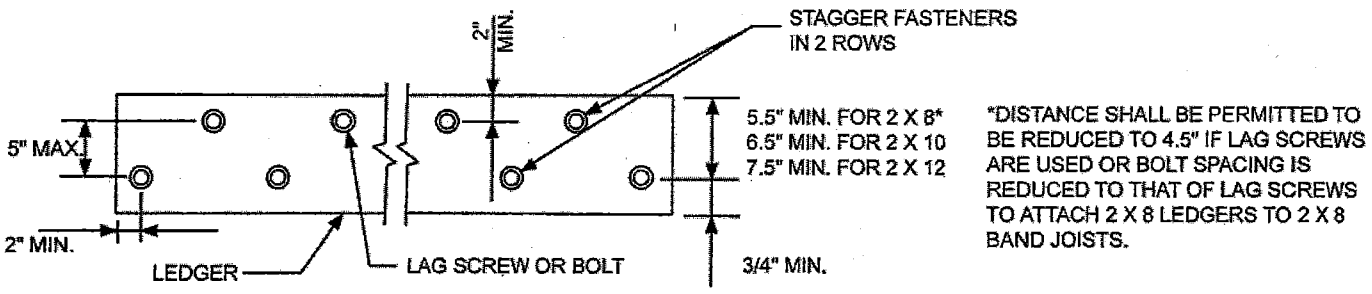

For SI: 1 inch = 25.4 mm.

FIGURE R507.2.1(1)
PLACEMENT OF LAG SCREWS AND BOLTS IN LEDGERS

3870

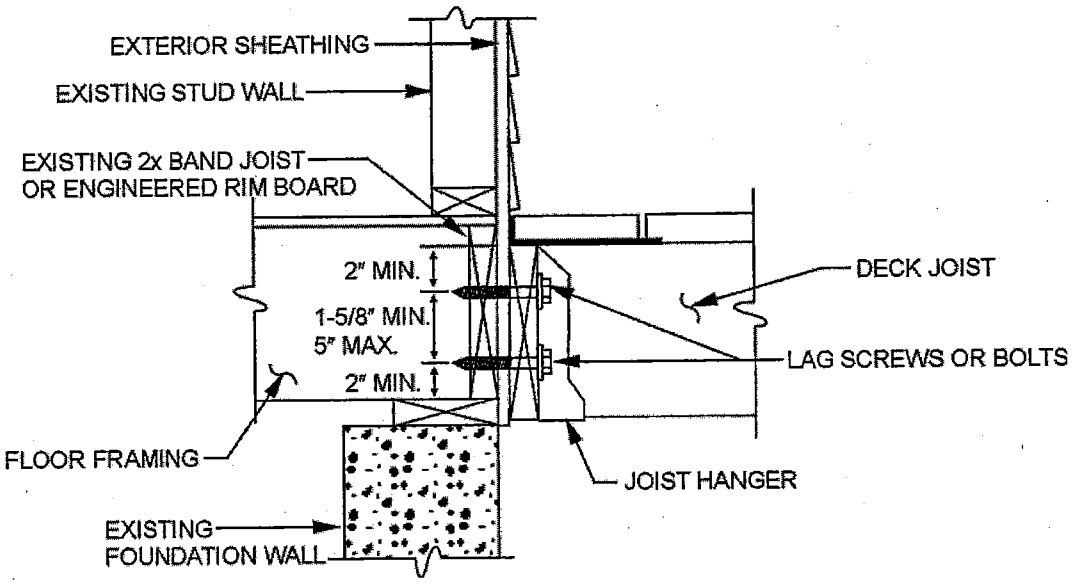

For SI: 1 inch = 25.4 mm.

FIGURE R507.2.1(2)
PLACEMENT OF LAG SCREWS AND BOLTS IN BAND JOISTS

performance levels and demonstrating compliance with the provisions of ASTM D 7032.

R507.3.1 Installation of wood/plastic composites. Wood/plastic composites shall be installed in accordance with the manufacturer's instructions.

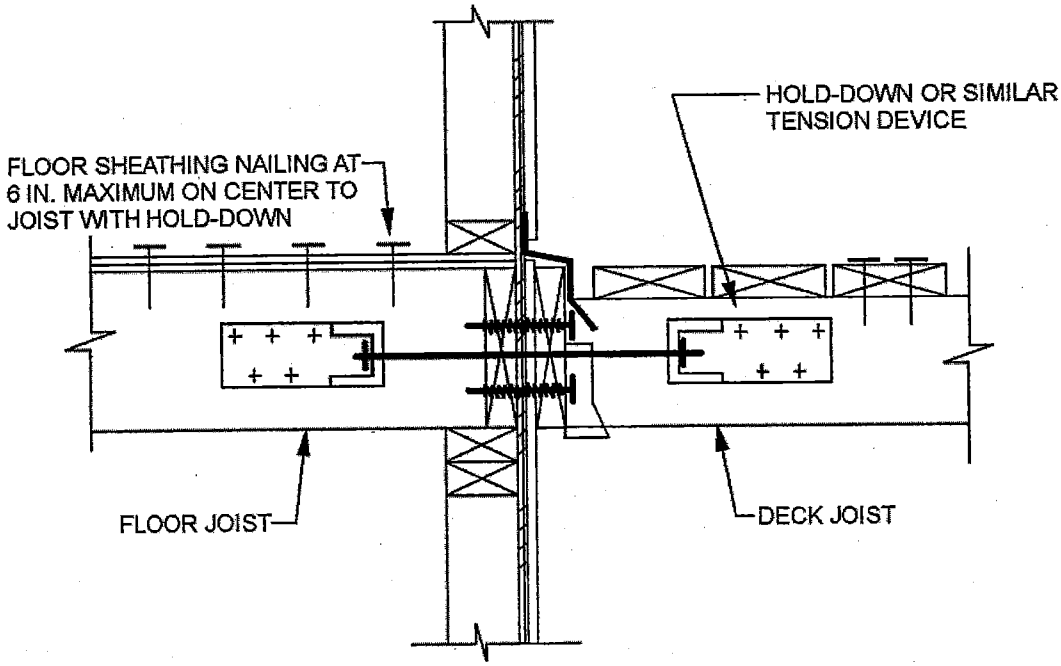

For SI: 1 inch = 25.4 mm.

FIGURE 507.2.3
DECK ATTACHMENT FOR LATERAL LOADS

CALIFORNIA RESIDENTIAL CODE – MATRIX ADOPTION TABLE
CHAPTER 6 – WALL CONSTRUCTION

(Matrix Adoption Tables are non-regulatory, intended only as an aid to the user.
See Chapter 1 for state agency authority and building applications.)

Adopting agency	BSC	SFM	HCD			DSA		OSHPD				BSCC	DHS	AGR	DWR	CEC	CA	SL	SLC
			1	2	1/AC	AC	SS	1	2	3	4								
Adopt entire chapter																			
Adopt entire chapter as amended (amended sections listed below)			X																
Adopt only those sections that are listed below																			
[California Code of Regulations, Title 19, Division 1]																			
Chapter / Section																			
R602.1			X	X															
R602.3.4.1			X																
R606.1.1			X																
R611.1			X																
R613.1			X																

* The California Code of Regulations (CCR), Title 19, Division 1 provisions that are found in the *California Fire Code* are a reprint from the current CCR, Title 19, Division 1 text for the code user's convenience only. The scope, applicability and appeals procedures of CCR, Title 19, Division I remain the same.

CHAPTER 6
WALL CONSTRUCTION

SECTION R601
GENERAL

R601.1 Application. The provisions of this chapter shall control the design and construction of all walls and partitions for all buildings.

R601.2 Requirements. Wall construction shall be capable of accommodating all loads imposed according to Section R301 and of transmitting the resulting loads to the supporting structural elements.

R601.2.1 Compressible floor-covering materials. Compressible floor-covering materials that compress more than $^1/_{32}$ inch (0.8 mm) when subjected to 50 pounds (23 kg) applied over 1 inch square (645 mm) of material and are greater than $^1/_8$ inch (3 mm) in thickness in the uncompressed state shall not extend beneath walls, partitions or columns, which are fastened to the floor.

*

SECTION R602
WOOD WALL FRAMING

R602.1 Identification. Load-bearing dimension lumber for studs, plates and headers shall be identified by a grade mark of a lumber grading or inspection agency that has been approved by an accreditation body that complies with DOC PS 20. In lieu of a grade mark, a certification of inspection issued by a lumber grading or inspection agency meeting the requirements of this section shall be accepted.

Note: See Section R301.1.1.1 for limited-density owner-built rural dwellings.

R602.1.1 End-jointed lumber. Approved end-jointed lumber identified by a grade mark conforming to Section R602.1 may be used interchangeably with solid-sawn members of the same species and grade. End-jointed lumber used in an assembly required elsewhere in this code to have a fire-resistance rating shall have the designation "Heat Resistant Adhesive" or "HRA" included in its grade mark.

R602.1.2 Structural glued laminated timbers. Glued laminated timbers shall be manufactured and identified as required in ANSI/AITC A190.1 and ASTM D 3737.

R602.1.3 Structural log members. Stress grading of structural log members of nonrectangular shape, as typically used in log buildings, shall be in accordance with ASTM D 3957. Such structural log members shall be identified by the grade mark of an approved lumber grading or inspection agency. In lieu of a grade mark on the material, a certificate of inspection as to species and grade, issued by a lumber-grading or inspection agency meeting the requirements of this section, shall be permitted to be accepted.

R602.1.4 Structural composite lumber. Structural capacities for structural composite lumber shall be established and monitored in accordance with ASTM D 5456.

R602.2 Grade. Studs shall be a minimum No. 3, standard or stud grade lumber.

Exception: Bearing studs not supporting floors and nonbearing studs may be utility grade lumber, provided the studs are spaced in accordance with Table R602.3(5).

R602.3 Design and construction. Exterior walls of wood-frame construction shall be designed and constructed in accordance with the provisions of this chapter and Figures R602.3(1) and R602.3(2) or in accordance with AF&PA's NDS. Components of exterior walls shall be fastened in accordance with Tables R602.3(1) through R602.3(4). Wall sheathing shall be fastened directly to framing members and, when placed on the exterior side of an exterior wall, shall be capable of resisting the wind pressures listed in Table R301.2(2) adjusted for height and exposure using Table R301.2(3). Wood structural panel sheathing used for exterior walls shall conform to DOC PS 1, DOC PS 2 or, when manufactured in Canada, CSA O437 or CSA O325. All panels shall be identified for grade, bond classification, and Performance Category by a grade mark or certificate of inspection issued by an approved agency and shall conform to the requirements of Table R602.3(3). Wall sheathing used only for exterior wall covering purposes shall comply with Section R703.

Studs shall be continuous from support at the sole plate to a support at the top plate to resist loads perpendicular to the wall. The support shall be a foundation or floor, ceiling or roof diaphragm or shall be designed in accordance with accepted engineering practice.

Exception: Jack studs, trimmer studs and cripple studs at openings in walls that comply with Tables R502.5(1) and R502.5(2).

R602.3.1 Stud size, height and spacing. The size, height and spacing of studs shall be in accordance with Table R602.3.(5).

Exceptions:

1. Utility grade studs shall not be spaced more than 16 inches (406 mm) on center, shall not support more than a roof and ceiling, and shall not exceed 8 feet (2438 mm) in height for exterior walls and load-bearing walls or 10 feet (3048 mm) for interior nonload-bearing walls.
2. Studs more than 10 feet (3048 mm) in height which are in accordance with Table R602.3.1.

R602.3.2 Top plate. Wood stud walls shall be capped with a double top plate installed to provide overlapping at corners and intersections with bearing partitions. End joints in top plates shall be offset at least 24 inches (610 mm). Joints in plates need not occur over studs. Plates shall be not less than 2-inches (51 mm) nominal thickness and have a width at least equal to the width of the studs.

Exception: A single top plate may be installed in stud walls, provided the plate is adequately tied at joints, corners and intersecting walls by a minimum 3-inch by 6-inch by a 0.036-inch-thick (76 mm by 152 mm by 0.914 mm) galvanized steel plate that is nailed to each wall or segment of wall by six 8d nails on each side, provided the rafters or joists are centered over the studs with a tolerance of no more than 1 inch (25 mm). The top plate may be omitted over lintels that are adequately tied to adjacent wall sections with steel plates or equivalent as previously described.

R602.3.3 Bearing studs. Where joists, trusses or rafters are spaced more than 16 inches (406 mm) on center and the bearing studs below are spaced 24 inches (610 mm) on center, such members shall bear within 5 inches (127 mm) of the studs beneath.

Exceptions:

1. The top plates are two 2-inch by 6-inch (38 mm by 140 mm) or two 3-inch by 4-inch (64 mm by 89 mm) members.
2. A third top plate is installed.
3. Solid blocking equal in size to the studs is installed to reinforce the double top plate.

R602.3.4 Bottom (sole) plate. Studs shall have full bearing on a nominal 2-by (51 mm) or larger plate or sill having a width at least equal to the width of the studs. **

R602.3.4.1 Rodent proofing. *Annular spaces around pipes, electric cables, conduits or other openings in bottom/sole plates at exterior walls shall be protected against the passage of rodents by closing such openings in accordance with the California Green Building Standards Code, Chapter 4, Division 4.4.*

R602.3.5 Braced wall panel uplift load path. *Braced wall panels* located at exterior walls that support roof rafters or trusses (including stories below top story) shall have the framing members connected in accordance with one of the following:

1. Fastening in accordance with Table R602.3(1) where:
   1.1. The basic wind speed does not exceed 90 mph (40 m/s), the wind exposure category is B, the roof pitch is 5:12 or greater, and the roof span is 32 feet (9754 mm) or less, or
   1.2. The net uplift value at the top of a wall does not exceed 100 plf. The net uplift value shall be determined in accordance with Section R802.11 and shall be permitted to be reduced by 60 plf (86 N/mm) for each full wall above.
2. Where the net uplift value at the top of a wall exceeds 100 plf (146 N/mm), installing approved uplift framing connectors to provide a continuous load path from the top of the wall to the foundation or to a point where the uplift force is 100 plf (146 N/mm) or less. The net uplift value shall be as determined in Item 1.2 above.
3. Wall sheathing and fasteners designed in accordance with accepted engineering practice to resist combined uplift and shear forces.

R602.4 Interior load-bearing walls. Interior load-bearing walls shall be constructed, framed and fireblocked as specified for exterior walls.

TABLE R602.3(1)
FASTENER SCHEDULE FOR STRUCTURAL MEMBERS

ITEM	DESCRIPTION OF BUILDING ELEMENTS	NUMBER AND TYPE OF FASTENER[a, b, c]	SPACING OF FASTENERS
	Roof		
1	Blocking between joists or rafters to top plate, toe nail	3-8d ($2^1/_2$" × 0.113")	—
2	Ceiling joists to plate, toe nail	3-8d ($2^1/_2$" × 0.113")	—
3	Ceiling joists not attached to parallel rafter, laps over partitions, face nail	3-10d	—
4	Collar tie to rafter, face nail or $1^1/_4$" × 20 gage ridge strap	3-10d (3" × 0.128")	—
5	Rafter or roof truss to plate, toe nail	3-16d box nails ($3^1/_2$" × 0.135") or 3-10d common nails (3" × 0.148")	2 toe nails on one side and 1 toe nail on opposite side of each rafter or truss[j]
6	Roof rafters to ridge, valley or hip rafters: toe nail face nail	4-16d ($3^1/_2$" × 0.135") 3-16d ($3^1/_2$" × 0.135")	—
	Wall		
7	Built-up studs-face nail	10d (3" × 0.128")	24" o.c.
8	Abutting studs at intersecting wall corners, face nail	16d (3 ½" x 0.135")	12" o.c.
9	Built-up header, two pieces with $^1/_2$" spacer	16d ($3^1/_2$" × 0.135")	16" o.c. along each edge
10	Continued header, two pieces	16d ($3^1/_2$" × 0.135")	16" o.c. along each edge
11	Continuous header to stud, toe nail	4-8d ($2^1/_2$" × 0.113")	—
12	Double studs, face nail	10d (3" × 0.128")	24" o.c.
13	Double top plates, face nail	10d (3" × 0.128")	24" o.c.
14	Double top plates, minimum 24-inch offset of end joints, face nail in lapped area	8-16d ($3^1/_2$" × 0.135")	—
15	Sole plate to joist or blocking, face nail	16d ($3^1/_2$" × 0.135")	16" o.c.
16	Sole plate to joist or blocking at braced wall panels	3-16d ($3^1/_2$" × 0.135")	16" o.c.
17	Stud to sole plate, toe nail	3-8d ($2^1/_2$" × 0.113") or 2-16d ($3^1/_2$" × 0.135")	— —
18	Top or sole plate to stud, end nail	2-16d ($3^1/_2$" × 0.135")	—
19	Top plates, laps at corners and intersections, face nail	2-10d (3" × 0.128")	—
20	1" brace to each stud and plate, face nail	2-8d ($2^1/_2$" × 0.113") 2 staples $1^3/_4$"	— —
21	1" × 6" sheathing to each bearing, face nail	2-8d ($2^1/_2$" × 0.113") 2 staples $1^3/_4$"	— —
22	1" × 8" sheathing to each bearing, face nail	2-8d ($2^1/_2$" × 0.113") 3 staples $1^3/_4$"	— —
23	Wider than 1" × 8" sheathing to each bearing, face nail	3-8d ($2^1/_2$" × 0.113") 4 staples $1^3/_4$"	— —
	Floor		
24	Joist to sill or girder, toe nail	3-8d ($2^1/_2$" × 0.113")	—
25	Rim joist to top plate, toe nail (roof applications also)	8d ($2^1/_2$" × 0.113")	6" o.c.
26	Rim joist or blocking to sill plate, toe nail	8d (2 ½" × 0.113")	6" o.c.
27	1" × 6" subfloor or less to each joist, face nail	2-8d ($2^1/_2$" × 0.113") 2 staples $1^3/_4$"	— —
28	2" subfloor to joist or girder, blind and face nail	2-16d ($3^1/_2$" × 0.135")	—
29	2" planks (plank & beam - floor & roof)	2-16d ($3^1/_2$" × 0.135")	at each bearing
30	Built-up girders and beams, 2-inch lumber layers	10d (3" × 0.128")	Nail each layer as follows: 32" o.c. at top and bottom and staggered. Two nails at ends and at each splice.
31	Ledger strip supporting joists or rafters	3-16d ($3^1/_2$" × 0.135")	At each joist or rafter

(continued)

3875

TABLE R602.3(1)—continued
FASTENER SCHEDULE FOR STRUCTURAL MEMBERS

ITEM	DESCRIPTION OF BUILDING MATERIALS	DESCRIPTION OF FASTENER[b, c, e]	SPACING OF FASTENERS	
			Edges (inches)[i]	Intermediate supports[c, e] (inches)
Wood structural panels, subfloor, roof and interior wall sheathing to framing and particleboard wall sheathing to framing				
32	$^3/_8$" - $^1/_2$"	6d common (2" × 0.113") nail (subfloor, wall)[j] 8d common (2$^1/_2$" × 0.131") nail (roof)[f]	6	12[g]
33	$^{19}/_{32}$" - 1"	8d common nail (2$^1/_2$" × 0.131")	6	12[g]
34	1$^1/_8$" - 1$^1/_4$"	10d common (3" × 0.148") nail or 8d (2$^1/_2$" × 0.131") deformed nail	6	12
Other wall sheathing[h]				
35	$^1/_2$" structural cellulosic fiberboard sheathing	1$^1/_2$" galvanized roofing nail, $^7/_{16}$" crown or 1" crown staple 16 ga., 1$^1/_4$" long	3	6
36	$^{25}/_{32}$" structural cellulosic fiberboard sheathing	1$^3/_4$" galvanized roofing nail, $^7/_{16}$" crown or 1" crown staple 16 ga., 1$^1/_2$" long	3	6
37	$^1/_2$" gypsum sheathing[d]	1$^1/_2$" galvanized roofing nail; staple galvanized, 1$^1/_2$" long; 1$^1/_4$ screws, Type W or S	7	7
38	$^5/_8$" gypsum sheathing[d]	1$^3/_4$" galvanized roofing nail; staple galvanized, 1$^5/_8$" long; 1$^5/_8$" screws, Type W or S	7	7
	Wood structural panels, combination subfloor underlayment to framing			
39	$^3/_4$" and less	6d deformed (2" × 0.120") nail or 8d common (2$^1/_2$" × 0.131") nail	6	12
40	$^7/_8$" - 1"	8d common (2$^1/_2$" × 0.131") nail or 8d deformed (2$^1/_2$" × 0.120") nail	6	12
41	1$^1/_8$" - 1$^1/_4$"	10d common (3" × 0.148") nail or 8d deformed (2$^1/_2$" × 0.120") nail	6	12

For SI: 1 inch = 25.4 mm, 1 foot = 304.8 mm, 1 mile per hour = 0.447 m/s; 1 Ksi = 6.895 MPa.

a. All nails are smooth-common, box or deformed shanks except where otherwise stated. Nails used for framing and sheathing connections shall have minimum average bending yield strengths as shown: 80 ksi for shank diameter of 0.192 inch (20d common nail), 90 ksi for shank diameters larger than 0.142 inch but not larger than 0.177 inch, and 100 ksi for shank diameters of 0.142 inch or less.

b. Staples are 16 gage wire and have a minimum $^7/_{16}$-inch on diameter crown width.

c. Nails shall be spaced at not more than 6 inches on center at all supports where spans are 48 inches or greater.

d. Four-foot by 8-foot or 4-foot by 9-foot panels shall be applied vertically.

e. Spacing of fasteners not included in this table shall be based on Table R602.3(2).

f. For regions having basic wind speed of 110 mph or greater, 8d deformed (2$^1/_2$" × 0.120) nails shall be used for attaching plywood and wood structural panel roof sheathing to framing within minimum 48-inch distance from gable end walls, if mean roof height is more than 25 feet, up to 35 feet maximum.

g. For regions having basic wind speed of 100 mph or less, nails for attaching wood structural panel roof sheathing to gable end wall framing shall be spaced 6 inches on center. When basic wind speed is greater than 100 mph, nails for attaching panel roof sheathing to intermediate supports shall be spaced 6 inches on center for minimum 48-inch distance from ridges, eaves and gable end walls; and 4 inches on center to gable end wall framing.

h. Gypsum sheathing shall conform to ASTM C 1396 and shall be installed in accordance with GA 253. Fiberboard sheathing shall conform to ASTM C 208.

i. Spacing of fasteners on floor sheathing panel edges applies to panel edges supported by framing members and required blocking and at all floor perimeters only. Spacing of fasteners on roof sheathing panel edges applies to panel edges supported by framing members and required blocking. Blocking of roof or floor sheathing panel edges perpendicular to the framing members need not be provided except as required by other provisions of this code. Floor perimeter shall be supported by framing members or solid blocking.

j. Where a rafter is fastened to an adjacent parallel ceiling joist in accordance with this schedule, provide two toe nails on one side of the rafter and toe nails from the ceiling joist to top plate in accordance with this schedule. The toe nail on the opposite side of the rafter shall not be required.

TABLE R602.3(2)
ALTERNATE ATTACHMENTS TO TABLE R602.3(1)

NOMINAL MATERIAL THICKNESS (inches)	DESCRIPTION[a, b] OF FASTENER AND LENGTH (inches)	SPACING[c] OF FASTENERS	
		Edges (inches)	Intermediate supports (inches)
Wood structural panels subfloor, roof[g] and wall sheathing to framing and particleboard wall sheathing to framing[f]			
Up to 1/2	Staple 15 ga. 1 3/4	4	8
	0.097 - 0.099 Nail 2 1/4	3	6
	Staple 16 ga. 1 3/4	3	6
19/32 and 5/8	0.113 Nail 2	3	6
	Staple 15 and 16 ga. 2	4	8
	0.097 - 0.099 Nail 2 1/4	4	8
23/32 and 3/4	Staple 14 ga. 2	4	8
	Staple 15 ga. 1 3/4	3	6
	0.097 - 0.099 Nail 2 1/4	4	8
	Staple 16 ga. 2	4	8
1	Staple 14 ga. 2 1/4	4	8
	0.113 Nail 2 1/4	3	6
	Staple 15 ga. 2 1/4	4	8
	0.097 - 0.099 Nail 2 1/2	4	8
NOMINAL MATERIAL THICKNESS (inches)	**DESCRIPTION[a,b] OF FASTENER AND LENGTH (inches)**	**SPACING[c] OF FASTENERS**	
		Edges (inches)	**Body of panel[d] (inches)**
Floor underlayment; plywood-hardboard-particleboard[f]			
Plywood			
1/4 and 5/16	1 1/4 ring or screw shank nail-minimum 12 1/2 ga. (0.099″) shank diameter	3	6
	Staple 18 ga., 7/8, 3/16 crown width	2	5
11/32, 3/8, 15/32, and 1/2	1 1/4 ring or screw shank nail-minimum 12 1/2 ga. (0.099″) shank diameter	6	8[e]
19/32, 5/8, 23/32 and 3/4	1 1/2 ring or screw shank nail-minimum 12 1/2 ga. (0.099″) shank diameter	6	8
	Staple 16 ga. 1 1/2	6	8
Hardboard[f]			
0.200	1 1/2 long ring-grooved underlayment nail	6	6
	4d cement-coated sinker nail	6	6
	Staple 18 ga., 7/8 long (plastic coated)	3	6
Particleboard			
1/4	4d ring-grooved underlayment nail	3	6
	Staple 18 ga., 7/8 long, 3/16 crown	3	6
3/8	6d ring-grooved underlayment nail	6	10
	Staple 16 ga., 1 1/8 long, 3/8 crown	3	6
1/2, 5/8	6d ring-grooved underlayment nail	6	10
	Staple 16 ga., 1 5/8 long, 3/8 crown	3	6

For SI: 1 inch = 25.4 mm.

a. Nail is a general description and may be T-head, modified round head or round head.

b. Staples shall have a minimum crown width of 7/16-inch on diameter except as noted.

c. Nails or staples shall be spaced at not more than 6 inches on center at all supports where spans are 48 inches or greater. Nails or staples shall be spaced at not more than 12 inches on center at intermediate supports for floors.

d. Fasteners shall be placed in a grid pattern throughout the body of the panel.

e. For 5-ply panels, intermediate nails shall be spaced not more than 12 inches on center each way.

f. Hardboard underlayment shall conform to CPA/ANSI A135.4

g. Specified alternate attachments for roof sheathing shall be permitted for windspeeds less than 100 mph. Fasteners attaching wood structural panel roof sheathing to gable end wall framing shall be installed using the spacing listed for panel edges.

TABLE R602.3(3)
REQUIREMENTS FOR WOOD STRUCTURAL PANEL WALL SHEATHING USED TO RESIST WIND PRESSURES[a, b, c]

MINIMUM NAIL		MINIMUM WOOD STRUCTURAL PANEL SPAN RATING	MINIMUM NOMINAL PANEL THICKNESS (inches)	MAXIMUM WALL STUD SPACING (inches)	PANEL NAIL SPACING		MAXIMUM WIND SPEED (mph)		
Size	Penetration (inches)				Edges (inches o.c.)	Field (inches o.c.)	Wind exposure category		
							B	C	D
6d Common (2.0″ × 0.113″)	1.5	24/0	3/8	16	6	12	110	90	85
8d Common (2.5″ × 0.131″)	1.75	24/16	7/16	16	6	12	130	110	105
				24	6	12	110	90	85

For SI: 1 inch = 25.4 mm, 1 mile per hour = 0.447 m/s.

a. Panel strength axis parallel or perpendicular to supports. Three-ply plywood sheathing with studs spaced more than 16 inches on center shall be applied with panel strength axis perpendicular to supports.

b. Table is based on wind pressures acting toward and away from building surfaces per Section R301.2. Lateral bracing requirements shall be in accordance with Section R602.10.

c. Wood structural panels with span ratings of Wall-16 or Wall-24 shall be permitted as an alternate to panels with a 24/0 span rating. Plywood siding rated 16 o.c. or 24 o.c. shall be permitted as an alternate to panels with a 24/16 span rating. Wall-16 and Plywood siding 16 o.c. shall be used with studs spaced a maximum of 16 inches on center.

TABLE R602.3(4)
ALLOWABLE SPANS FOR PARTICLEBOARD WALL SHEATHING[a]

THICKNESS (inch)	GRADE	STUD SPACING (inches)	
		When siding is nailed to studs	When siding is nailed to sheathing
3/8	M-1 Exterior glue	16	—
1/2	M-2 Exterior glue	16	16

For SI: 1 inch = 25.4 mm.

a. Wall sheathing not exposed to the weather. If the panels are applied horizontally, the end joints of the panel shall be offset so that four panels corners will not meet. All panel edges must be supported. Leave a 1/16-inch gap between panels and nail no closer than 3/8 inch from panel edges.

TABLE R602.3(5)
SIZE, HEIGHT AND SPACING OF WOOD STUDS[a]

STUD SIZE (inches)	BEARING WALLS					NONBEARING WALLS	
	Laterally unsupported stud height[a] (feet)	Maximum spacing when supporting a roof-ceiling assembly or a habitable attic assembly, only (inches)	Maximum spacing when supporting one floor, plus a roof-ceiling assembly or a habitable attic assembly (inches)	Maximum spacing when supporting two floors, plus a roof-ceiling assembly or a habitable attic assembly (inches)	Maximum spacing when supporting one floor height[a] (feet)	Laterally unsupported stud height[a] (feet)	Maximum spacing (inches)
					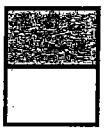		
2 × 3[b]	—	—	—	—	—	10	16
2 × 4	10	24[c]	16[c]	—	24	14	24
3 × 4	10	24	24	16	24	14	24
2 × 5	10	24	24	—	24	16	24
2 × 6	10	24	24	16	24	20	24

For SI: 1 inch = 25.4 mm, 1 foot = 304.8 mm, 1 square foot = 0.093 m^2.

a. Listed heights are distances between points of lateral support placed perpendicular to the plane of the wall. Increases in unsupported height are permitted where justified by analysis.

b. Shall not be used in exterior walls.

c. A habitable attic assembly supported by 2 × 4 studs is limited to a roof span of 32 feet. Where the roof span exceeds 32 feet, the wall studs shall be increased to 2 × 6 or the studs shall be designed in accordance with accepted engineering practice.

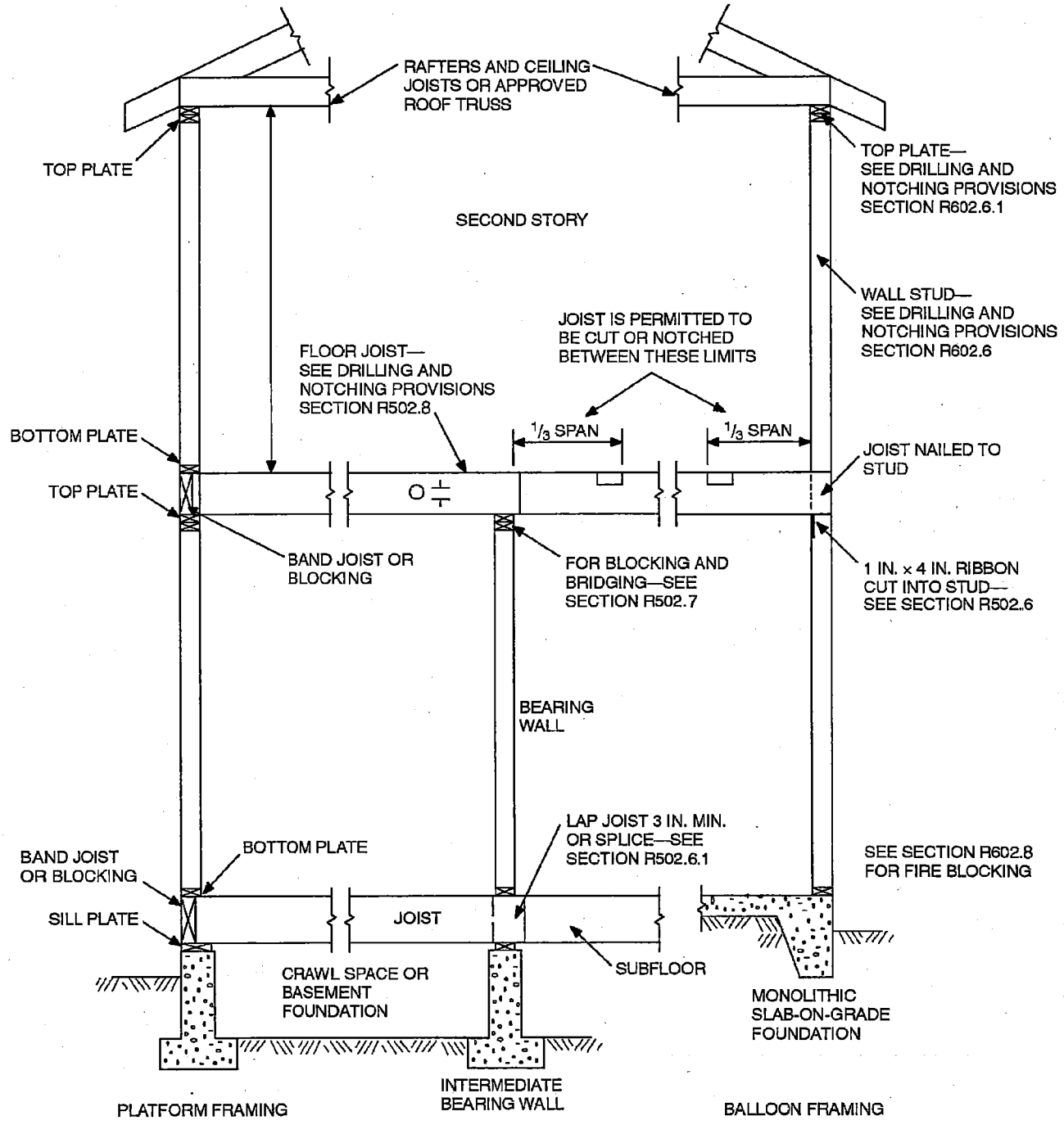

For SI: 1 inch = 25.4 mm, 1 foot = 304.8 mm.

FIGURE R602.3(1)
TYPICAL WALL, FLOOR AND ROOF FRAMING

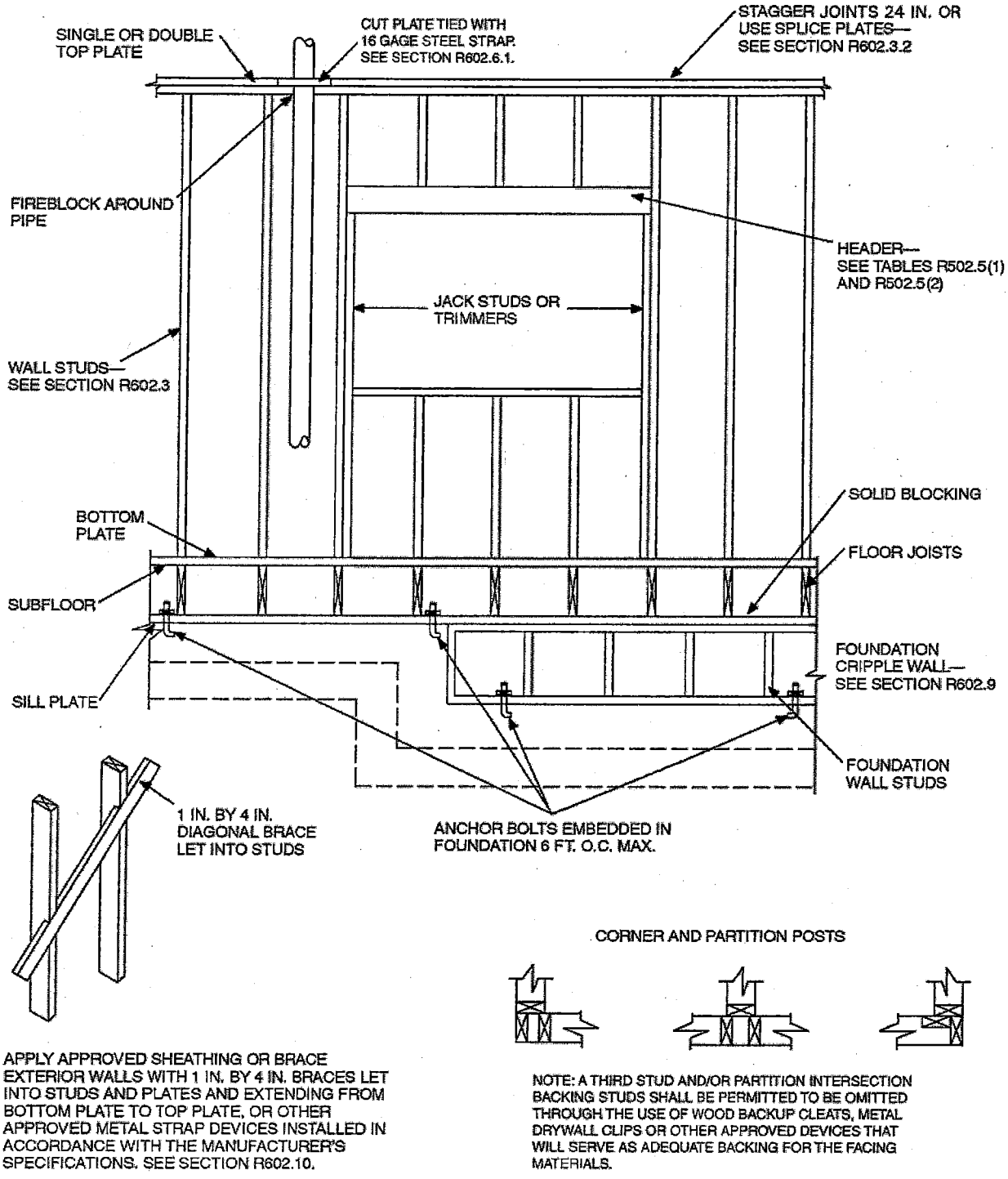

For SI: 1 inch = 25.4 mm, 1 foot = 304.8 mm.

FIGURE R602.3(2)
FRAMING DETAILS

3880

TABLE R602.3.1
MAXIMUM ALLOWABLE LENGTH OF WOOD WALL STUDS EXPOSED TO WIND SPEEDS OF 100 MPH OR LESS IN SEISMIC DESIGN CATEGORIES A, B, C, D_0, D_1 and D_2[b, c]

HEIGHT (feet)	ON-CENTER SPACING (inches)			
	24	16	12	8
Supporting a roof only				
> 10	2 × 4	2 × 4	2 × 4	2 × 4
12	2 × 6	2 × 4	2 × 4	2 × 4
14	2 × 6	2 × 6	2 × 6	2 × 4
16	2 × 6	2 × 6	2 × 6	2 × 4
18	NA[a]	2 × 6	2 × 6	2 × 6
20	NA[a]	NA[a]	2 × 6	2 × 6
24	NA[a]	NA[a]	NA[a]	2 × 6
Supporting one floor and a roof				
> 10	2 × 6	2 × 4	2 × 4	2 × 4
12	2 × 6	2 × 6	2 × 6	2 × 4
14	2 × 6	2 × 6	2 × 6	2 × 6
16	NA[a]	2 × 6	2 × 6	2 × 6
18	NA[a]	2 × 6	2 × 6	2 × 6
20	NA[a]	NA[a]	2 × 6	2 × 6
24	NA[a]	NA[a]	NA[a]	2 × 6
Supporting two floors and a roof				
> 10	2 × 6	2 × 6	2 × 4	2 × 4
12	2 × 6	2 × 6	2 × 6	2 × 6
14	2 × 6	2 × 6	2 × 6	2 × 6
16	NA[a]	NA[a]	2 × 6	2 × 6
18	NA[a]	NA[a]	2 × 6	2 × 6
20	NA[a]	NA[a]	NA[a]	2 × 6
22	NA[a]	NA[a]	NA[a]	NA[a]
24	NA[a]	NA[a]	NA[a]	NA[a]

For SI: 1 inch = 25.4 mm, 1 foot = 304.8 mm, 1 pound per square foot = 0.0479 kPa
1 pound per square inch = 6.895 kPa, 1 mile per hour = 0.447 m/s.

a. Design required.

b. Applicability of this table assumes the following: Snow load not exceeding 25 psf, f_b not less than 1310 psi determined by multiplying the AF&PA NDS tabular base design value by the repetitive use factor, and by the size factor for all species except southern pine, E not less than 1.6×10^6 psi, tributary dimensions for floors and roofs not exceeding 6 feet, maximum span for floors and roof not exceeding 12 feet, eaves not over 2 feet in dimension and exterior sheathing. Where the conditions are not within these parameters, design is required.

c. Utility, standard, stud and No. 3 grade lumber of any species are not permitted.

(continued)

TABLE R602.3.1—continued
MAXIMUM ALLOWABLE LENGTH OF WOOD WALL STUDS EXPOSED TO WIND SPEEDS OF 100 MPH OR LESS IN SEISMIC DESIGN CATEGORIES A, B, C, D_0, D_1 and D_2

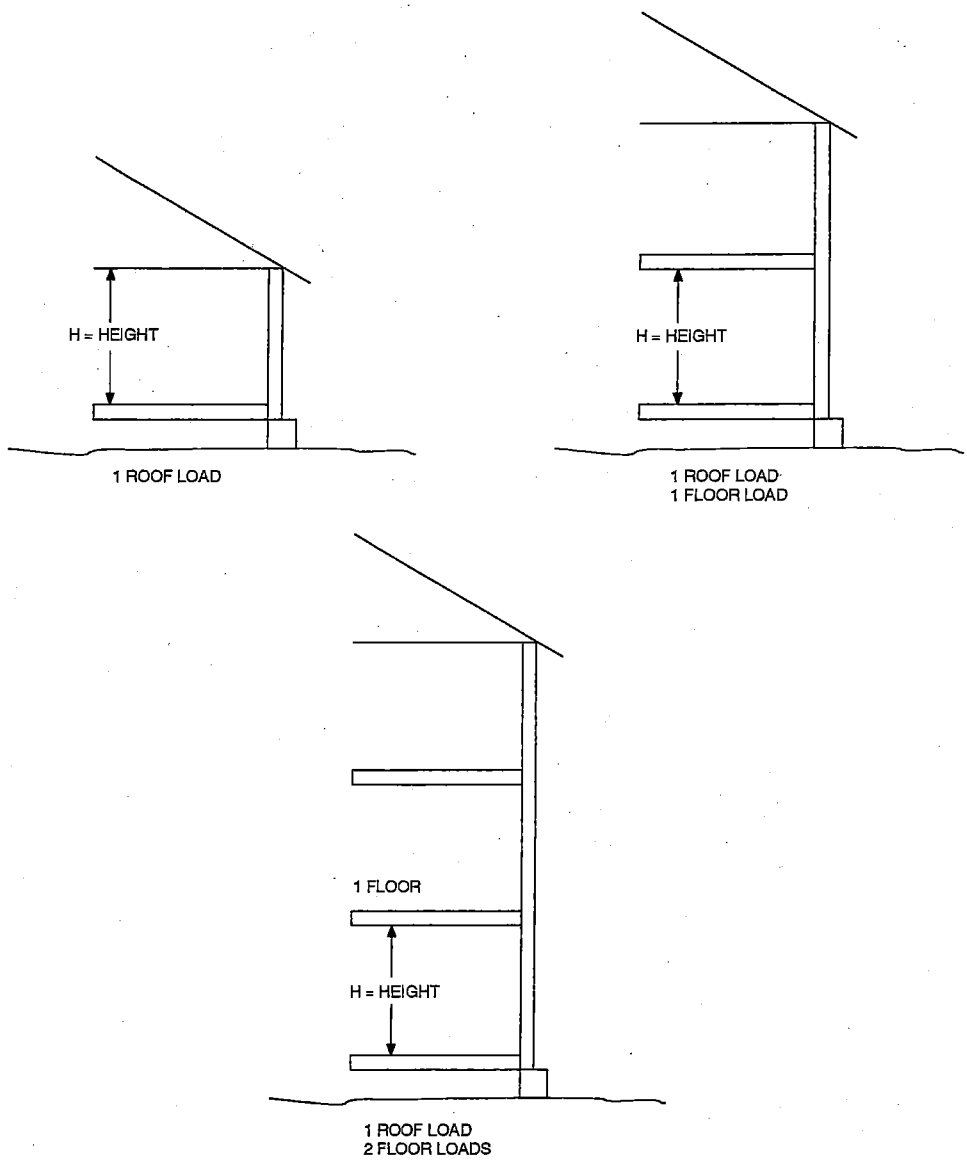

R602.5 Interior nonbearing walls. Interior nonbearing walls shall be permitted to be constructed with 2 inch by 3 inch (51 mm by 76 mm) studs spaced 24 inches (610 mm) on center or, when not part of a braced wall line, 2 inch by 4 inch (51 mm by 102 mm) flat studs spaced at 16 inches (406 mm) on center. Interior nonbearing walls shall be capped with at least a single top plate. Interior nonbearing walls shall be fireblocked in accordance with Section R602.8.

R602.6 Drilling and notching of studs. Drilling and notching of studs shall be in accordance with the following:

1. Notching. Any stud in an exterior wall or bearing partition may be cut or notched to a depth not exceeding 25 percent of its width. Studs in nonbearing partitions may be notched to a depth not to exceed 40 percent of a single stud width.
2. Drilling. Any stud may be bored or drilled, provided that the diameter of the resulting hole is no more than 60 percent of the stud width, the edge of the hole is no more than $^5/_8$ inch (16 mm) to the edge of the stud, and the hole is not located in the same section as a cut or notch. Studs located in exterior walls or bearing partitions drilled over 40 percent and up to 60 percent shall also be doubled with no more than two successive doubled studs bored. See Figures R602.6(1) and R602.6(2).

   Exception: Use of *approved* stud shoes is permitted when they are installed in accordance with the manufacturer's recommendations.

R602.6.1 Drilling and notching of top plate. When piping or ductwork is placed in or partly in an exterior wall or interior load-bearing wall, necessitating cutting, drilling or notching of the top plate by more than 50 percent of its width, a galvanized metal tie not less than 0.054 inch thick (1.37 mm) (16 ga) and $1^1/_2$ inches (38 mm) wide shall be fastened across and to the plate at each side of the opening with not less than eight 10d (0.148 inch diameter) having a minimum length of $1^1/_2$ inches (38 mm) at each side or equivalent. The metal tie must extend a minimum of 6 inches past the opening. See Figure R602.6.1.

Exception: When the entire side of the wall with the notch or cut is covered by wood structural panel sheathing.

R602.7 Headers. For header spans see Tables R502.5(1), R502.5(2) and R602.7.1.

R602.7.1 Single member headers. Single headers shall be framed with a single flat 2-inch-nominal (51 mm) member or wall plate not less in width than the wall studs on the top and bottom of the header in accordance with Figures R602.7.1(1) and R602.7.1(2).

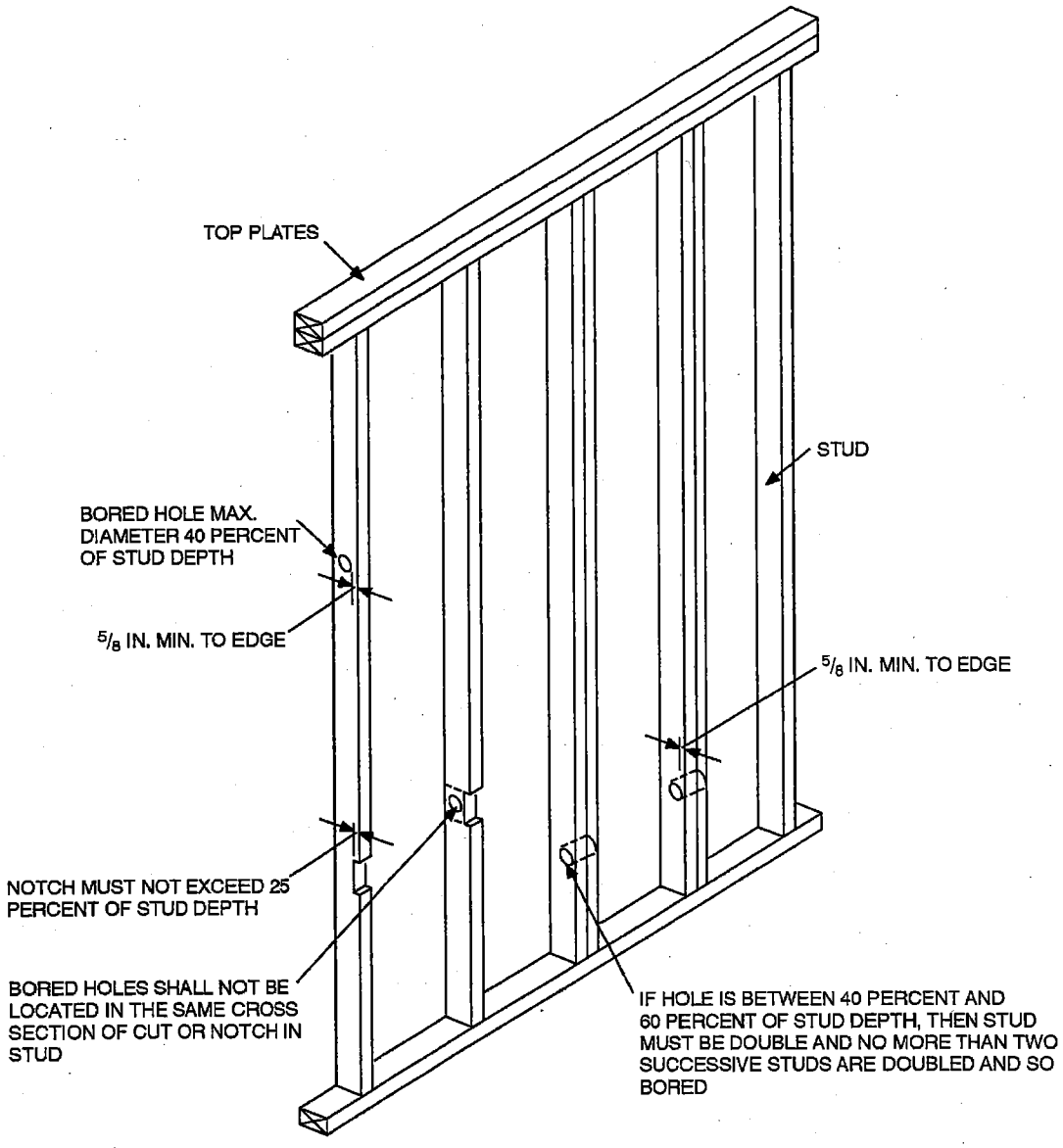

For SI: 1 inch = 25.4 mm.
Note: Condition for exterior and bearing walls.

FIGURE R602.6(1)
NOTCHING AND BORED HOLE LIMITATIONS FOR EXTERIOR WALLS AND BEARING WALLS

R602.7.2 Wood structural panel box headers. Wood structural panel box headers shall be constructed in accordance with Figure R602.7.2 and Table R602.7.2.

R602.7.3 Nonbearing walls. Load-bearing headers are not required in interior or exterior nonbearing walls. A single flat 2-inch by 4-inch (51 mm by 102 mm) member may be used as a header in interior or exterior nonbearing walls for openings up to 8 feet (2438 mm) in width if the vertical distance to the parallel nailing surface above is not more than 24 inches (610 mm). For such nonbearing headers, no cripples or blocking are required above the header.

R602.8 Fireblocking required. Fireblocking shall be provided in accordance with Section R302.11.

R602.9 Cripple walls. Foundation cripple walls shall be framed of studs not smaller than the studding above. When exceeding 4 feet (1219 mm) in height, such walls shall be framed of studs having the size required for an additional story.

Cripple walls with a stud height less than 14 inches (356 mm) shall be continuously sheathed on one side with wood structural panels fastened to both the top and bottom plates in accordance with Table R602.3(1), or the cripple walls shall be constructed of solid blocking.

All cripple walls shall be supported on continuous foundations.

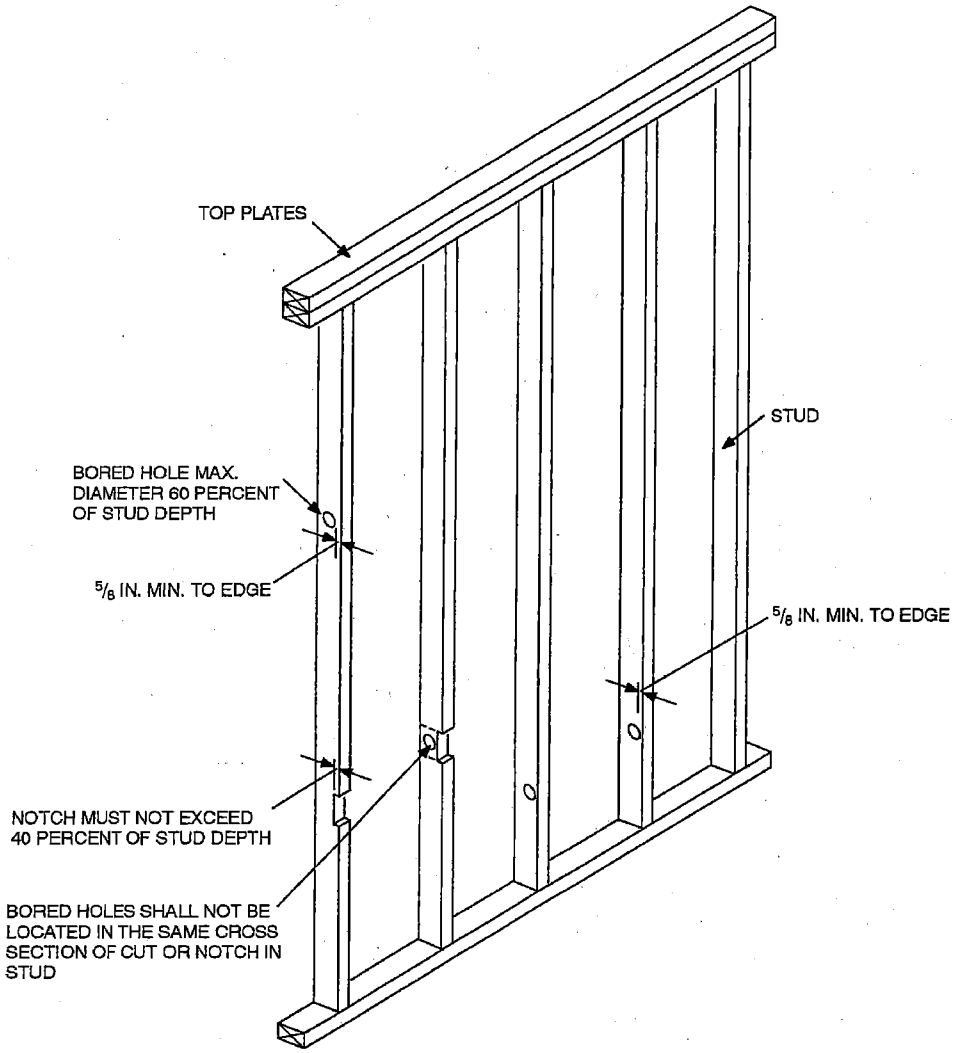

For SI: 1 inch = 25.4 mm.

FIGURE R602.6(2)
NOTCHING AND BORED HOLE LIMITATIONS FOR INTERIOR NONBEARING WALLS

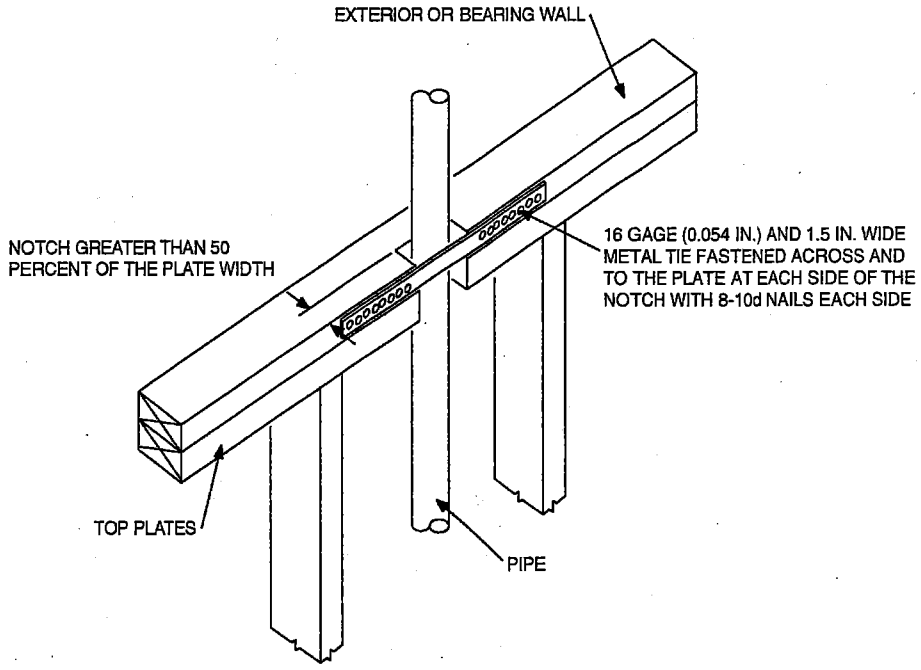

For SI: 1 inch = 25.4 mm.

FIGURE R602.6.1
TOP PLATE FRAMING TO ACCOMMODATE PIPING

R602.10 Wall bracing. Buildings shall be braced in accordance with this section or, when applicable, Section R602.12. Where a building, or portion thereof, does not comply with one or more of the bracing requirements in this section, those portions shall be designed and constructed in accordance with Section R301.1.

R602.10.1 Braced wall lines. For the purpose of determining the amount and location of bracing required in each story level of a building, braced wall lines shall be designated as straight lines in the building plan placed in accordance with this section.

R602.10.1.1 Length of a braced wall line. The length of a braced wall line shall be the distance between its ends. The end of a braced wall line shall be the intersection with a perpendicular braced wall line, an angled braced wall line as permitted in Section R602.10.1.4 or an exterior wall as shown in Figure R602.10.1.1.

R602.10.1.2 Offsets along a braced wall line. All exterior walls parallel to a braced wall line shall be offset not more than 4 feet (1219 mm) from the designated braced wall line location as shown Figure R602.10.1.1. Interior walls used as bracing shall be offset not more than 4 feet (1219 mm) from a braced wall line through the interior of the building as shown in Figure R602.10.1.1.

R602.10.1.3 Spacing of braced wall lines. The spacing between parallel braced wall lines shall be in accordance with Table R602.10.1.3. Intermediate braced wall lines through the interior of the building shall be permitted.

R602.10.1.4 Angled walls. Any portion of a wall along a braced wall line shall be permitted to angle out of plane for a maximum diagonal length of 8 feet (2438 mm). Where the angled wall occurs at a corner, the length of the braced wall line shall be measured from the projected corner as shown in Figure R602.10.1.4. Where the diagonal length is greater than 8 feet (2438 mm), it shall be considered a separate braced wall line and shall be braced in accordance with Section R602.10.1.

R602.10.2 Braced wall panels. Braced wall panels shall be full-height sections of wall that shall have no vertical or horizontal offsets. Braced wall panels shall be constructed and placed along a braced wall line in accordance with this section and the bracing methods specified in Section R602.10.4.

R602.10.2.1 Braced wall panel uplift load path. The bracing lengths in Table R602.10.3(1) apply only when uplift loads are resisted in accordance with Section R602.3.5.

R602.10.2.2 Locations of braced wall panels. A braced wall panel shall begin within 10 feet (3810 mm) from each end of a braced wall line as determined in Section R602.10.1.1. The distance between adjacent edges of braced wall panels along a braced wall line shall be no greater than 20 feet (6096 mm) as shown in Figure R602.10.2.2.

TABLE R602.7.1
SPANS FOR MINIMUM No.2 GRADE SINGLE HEADER[a, b, c, f]

SINGLE HEADERS SUPPORTING	SIZE	WOOD SPECIES	GROUND SNOW LOAD (psf)								
			≤ 20[d]			30			50		
			Building Width (feet)[e]								
			20	28	36	20	28	36	20	28	36
Roof and ceiling	2 × 8	Spruce-Pine-Fir	4-10	4-2	3-8	4-3	3-8	3-3	3-7	3-0	2-8
		Hem-Fir	5-1	4-4	3-10	4-6	3-10	3-5	3-9	3-2	2-10
		Douglas-Fir or Southern Pine	5-3	4-6	4-0	4-7	3-11	3-6	3-10	3-3	2-11
	2 × 10	Spruce-Pine-Fir	6-2	5-3	4-8	5-5	4-8	4-2	4-6	3-11	3-1
		Hem-Fir	6-6	5-6	4-11	5-8	4-11	4-4	4-9	4-1	3-7
		Douglas-Fir or Southern Pine	6-8	5-8	5-1	5-10	5-0	4-6	4-11	4-2	3-9
	2 × 12	Spruce-Pine-Fir	7-6	6-5	5-9	6-7	5-8	4-5	5-4	3-11	3-1
		Hem-Fir	7-10	6-9	6-0	6-11	5-11	5-3	5-9	4-8	3-8
		Douglas-Fir or Southern Pine	8-1	6-11	6-2	7-2	6-1	5-5	5-11	5-1	4-6
Roof, ceiling and one center-bearing floor	2 × 8	Spruce-Pine-Fir	3-10	3-3	2-11	3-9	3-3	2-11	3-5	2-11	2-7
		Hem-Fir	4-0	3-5	3-1	3-11	3-5	3-0	3-7	3-0	2-8
		Douglas-Fir or Southern Pine	4-1	3-7	3-2	4-1	3-6	3-1	3-8	3-2	2-9
	2 × 10	Spruce-Pine-Fir	4-11	4-2	3-8	4-10	4-1	3-6	4-4	3-7	2-10
		Hem-Fir	5-1	4-5	3-11	5-0	4-4	3-10	4-6	3-11	3-4
		Douglas-Fir or Southern Pine	5-3	4-6	4-1	5-2	4-5	4-0	4-8	4-0	3-7
	2 × 12	Spruce-Pine-Fir	5-8	4-2	3-4	5-5	4-0	3-6	4-9	3-6	2-10
		Hem-Fir	5-11	4-11	3-11	5-10	4-9	4-2	5-5	4-2	3-4
		Douglas-Fir or Southern Pine	6-1	5-3	4-8	6-0	5-2	4-10	5-7	4-10	4-3
Roof, ceiling and one clear span floor	2 × 8	Spruce-Pine-Fir	3-5	2-11	2-7	3-4	2-11	2-7	3-3	2-10	2-6
		Hem-Fir	3-7	3-1	2-9	3-6	3-0	2-8	3-5	2-11	2-7
		Douglas-Fir or Southern Pine	3-8	3-2	2-10	3-7	3-1	2-9	3-6	3-0	2-9
	2 × 10	Spruce-Pine-Fir	4-4	3-7	2-10	4-3	3-6	2-9	4-2	3-4	2-7
		Hem-Fir	4-7	3-11	3-5	4-6	3-10	3-3	4-4	3-9	3-1
		Douglas-Fir or Southern Pine	4-8	4-0	3-7	4-7	4-0	3-6	4-6	3-10	3-5
	2 × 12	Spruce-Pine-Fir	4-11	3-7	2-10	4-9	3-6	2-9	4-6	3-4	2-7
		Hem-Fir	5-6	4-3	3-5	5-6	4-2	3-3	5-4	3-11	3-1
		Douglas-Fir or Southern Pine	5-8	4-11	4-4	5-7	4-10	4-3	5-6	4-8	4-2

For SI: 1 inch=25.4 mm, 1 pound per square foot = 0.0479 kPa.

a. Spans are given in feet and inches.

b. Table is based on a maximum roof-ceiling dead load of 15 psf.

c. The header is permitted to be supported by an approved framing anchor attached to the full-height wall stud and to the header in lieu of the required jack stud.

d. The 20 psf ground snow load condition shall apply only when the roof pitch is 9:12 or greater. In conditions where the ground snow load is 30 psf or less and the roof pitch is less than 9:12, use the 30 psf ground snow load condition.

e. Building width is measured perpendicular to the ridge. For widths between those shown, spans are permitted to be interpolated.

f. The header shall bear on a minimum of one jack stud at each end.

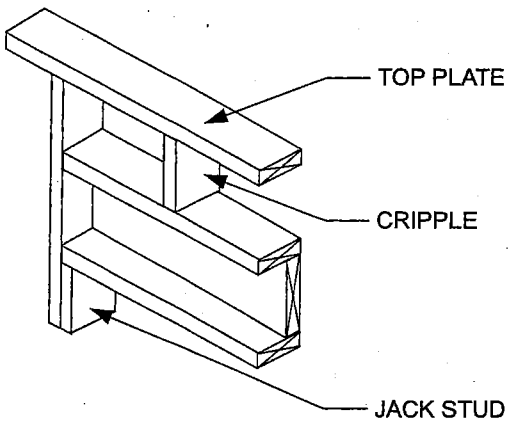

FIGURE R602.7.1(1)
SINGLE MEMBER HEADER IN EXTERIOR BEARING WALL

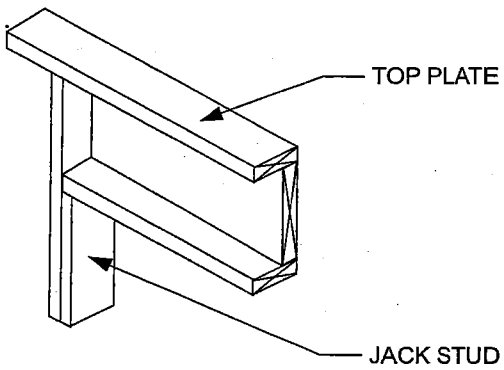

FIGURE R602.7.1(2)
ALTERNATIVE SINGLE MEMBER HEADER WITHOUT CRIPPLE

TABLE R602.7.2
MAXIMUM SPANS FOR WOOD STRUCTURAL PANEL BOX HEADERS[a]

HEADER CONSTRUCTION[b]	HEADER DEPTH (inches)	HOUSE DEPTH (feet)				
		24	26	28	30	32
Wood structural panel–one side	9	4	4	3	3	—
	15	5	5	4	3	3
Wood structural panel–both sides	9	7	5	5	4	3
	15	8	8	7	7	6

For SI: 1 inch = 25.4 mm, 1 foot = 304.8 mm.

a. Spans are based on single story with clear-span trussed roof or two-story with floor and roof supported by interior-bearing walls.

b. See Figure R602.7.2 for construction details.

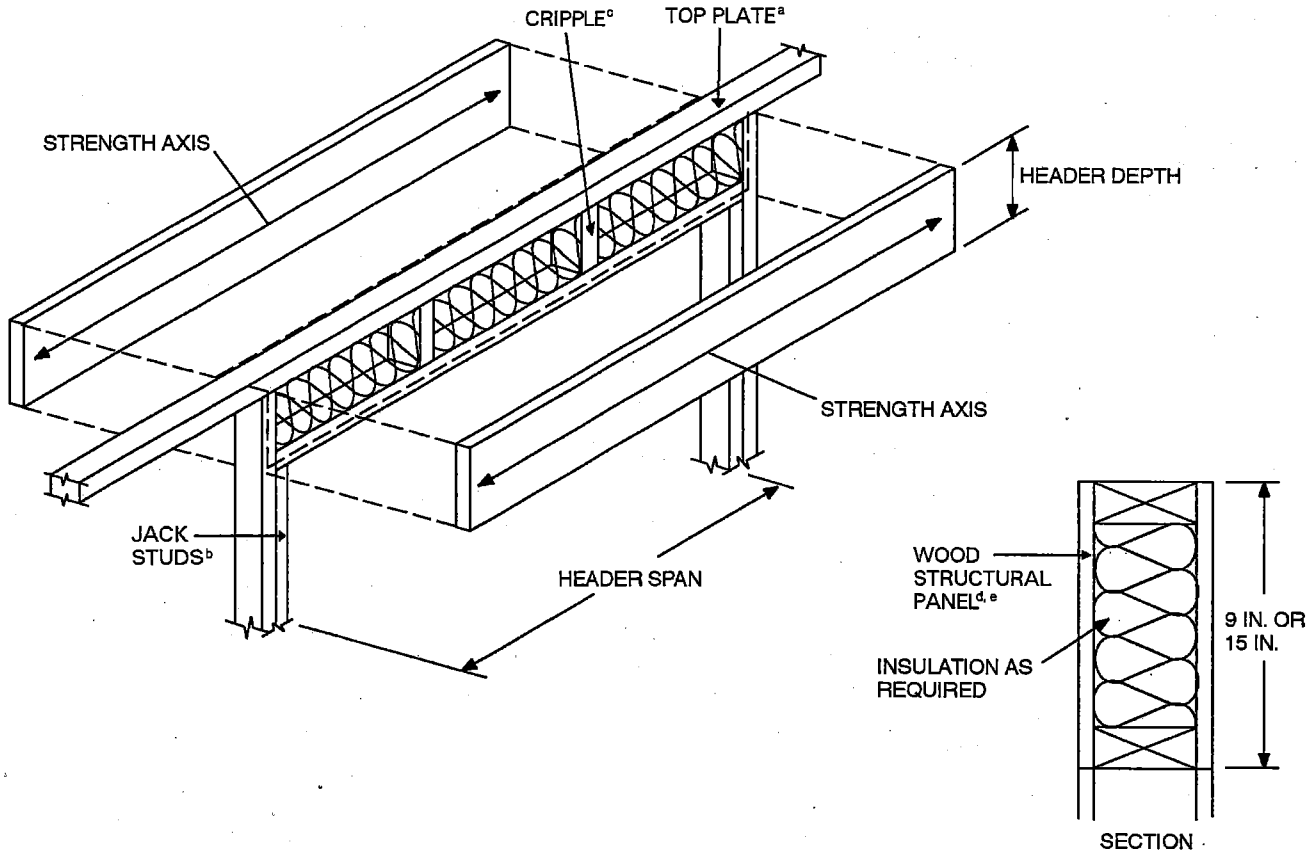

For SI: 1 inch = 25.4 mm, 1 foot = 304.8 mm.

NOTES:

a. The top plate shall be continuous over header.

b. Jack studs shall be used for spans over 4 feet.

c. Cripple spacing shall be the same as for studs.

d. Wood structural panel faces shall be single pieces of $^{15}/_{32}$-inch-thick Exposure 1 (exterior glue) or thicker, installed on the interior or exterior or both sides of the header.

e. Wood structural panel faces shall be nailed to framing and cripples with 8d common or galvanized box nails spaced 3 inches on center, staggering alternate nails $^{1}/_{2}$ inch. Galvanized nails shall be hot-dipped or tumbled.

FIGURE R602.7.2
TYPICAL WOOD STRUCTURAL PANEL BOX HEADER CONSTRUCTION

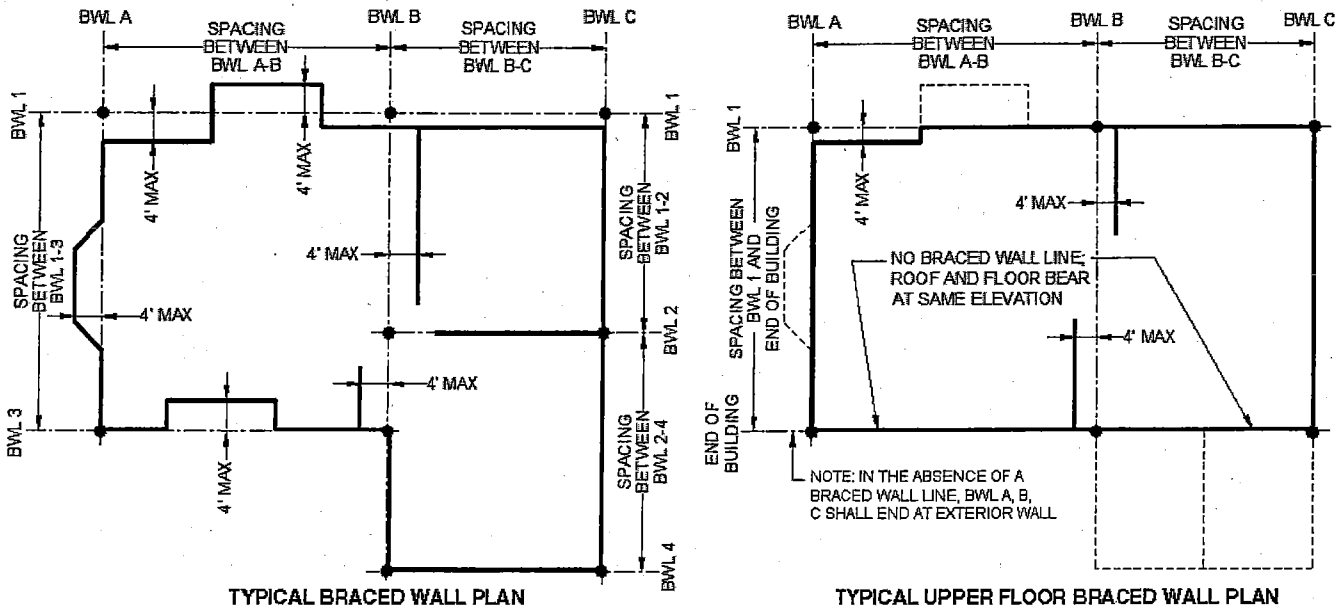

For SI: 1 foot = 304.8 mm.

FIGURE R602.10.1.1
BRACED WALL LINES

TABLE R602.10.1.3
BRACED WALL LINE SPACING

APPLICATION	CONDITION	BUILDING TYPE	BRACED WALL LINE SPACING CRITERIA	
			Maximum Spacing	Exception to Maximum Spacing
Wind bracing	85 mph to < 110 mph	Detached, townhouse	60 feet	None
Seismic bracing	SDC A – C	Detached	Use wind bracing	
	SDC A – B	Townhouse	Use wind bracing	
	SDC C	Townhouse	35 feet	Up to 50 feet when length of required bracing per Table R602.10.3(3) is adjusted in accordance with Table R602.10.3(4).
	SDC D_0, D_1, D_2	Detached, townhouses, one- and two-story only	25 feet	Up to 35 feet to allow for a single room not to exceed 900 square feet. Spacing of all other braced wall lines shall not exceed 25 feet.
	SDC D_0, D_1, D_2	Detached, townhouse	25 feet	Up to 35 feet when length of required bracing per Table R602.10.3(3) is adjusted in accordance with Table R602.10.3(4).

For SI: 1 foot = 304.8 mm, 1 square foot = 0.0929 m^2, 1 mile per hour = 0.447 m/s.

R602.10.2.2.1 Location of braced wall panels in Seismic Design Categories D_0, D_1 and D_2. Braced wall panels shall be located at each end of a braced wall line.

Exception: Braced wall panels constructed of Methods WSP or BV-WSP and continuous sheathing methods as specified in Section R602.10.4 shall be permitted to begin no more than 10 feet (3048 mm) from each end of a braced wall line provided each end complies with one of the following.

1. A minimum 24-inch-wide (610 mm) panel for Methods WSP, CS-WSP, CS-G, and CS-PF, and 32-inch-wide (813 mm) panel for Method CS-SFB is applied to each side of the building corner as shown in Condition 4 of Figure R602.10.7.
2. The end of each braced wall panel closest to the end of the braced wall line shall have an 1,800 lb (8 kN) hold-down device fastened to the stud at the edge of the braced wall panel closest to the corner and to the foundation or framing below as shown in Condition 5 of Figure R602.10.7.
3. For Method BV-WSP, hold-down devices shall be provided in accordance with Table R602.10.6.5 at the ends of each braced wall panel.

R602.10.2.3 Minimum number of braced wall panels. Braced wall lines with a length of 16 feet (4877 mm) or less shall have a minimum of two braced wall panels of any length or one braced wall panel equal to 48 inches (1219 mm) or more. Braced wall lines greater than 16 feet (4877 mm) shall have a minimum of two braced wall panels.

R602.10.3 Required length of bracing. The required length of bracing along each braced wall line shall be determined as follows.

1. All buildings in Seismic Design Categories A and B shall use Table R602.10.3(1) and the applicable adjustment factors in Table R602.10.3(2).
2. Detached buildings in Seismic Design Category C shall use Table R602.10.3(1) and the applicable adjustment factors in Table R602.10.3(2).
3. Townhouses in Seismic Design Category C shall use the greater value determined from Table R602.10.3(1) or R602.10.3(3) and the applicable adjustment factors in Table R602.10.3(2) or R602.10.3(4) respectively.
4. All buildings in Seismic Design Categories D_0, D_1 and D_2 shall use the greater value determined from Table R602.10.3(1) or R602.10.3(3) and the applicable adjustment factors in Table R602.10.3(2) or R602.10.3(4) respectively.

Only braced wall panels parallel to the braced wall line shall contribute toward the required length of bracing of that braced wall line. Braced wall panels along an angled wall meeting the minimum length requirements of Tables R602.10.5 and R602.10.5.2 shall be permitted to contribute its projected length toward the minimum required length of bracing for the braced wall line as shown in Figure R602.10.1.4. Any braced wall panel on an angled wall at the end of a braced wall line shall contribute its projected length for only one of the braced wall lines at the projected corner.

Exception: The length of wall bracing for dwellings in Seismic Design Categories D_0, D_1 and D_2 with stone or masonry veneer installed per Section R703.7 and exceeding the first-story height shall be in accordance with Section R602.10.6.5.

R602.10.4 Construction methods for braced wall panels. Intermittent and continuously sheathed braced wall panels shall be constructed in accordance with this section and the methods listed in Table R602.10.4.

R602.10.4.1 Mixing methods. Mixing of bracing methods shall be permitted as follows:

1. Mixing intermittent bracing and continuous sheathing methods from story to story shall be permitted.
2. Mixing intermittent bracing methods from braced wall line to braced wall line within a story shall be permitted. Within Seismic Design Categories A, B and C or in regions where the basic wind speed is less than or equal to 100 mph (45 m/s), mixing of intermittent bracing and continuous sheathing methods from braced wall line to braced wall line within a story shall be permitted.
3. Mixing intermittent bracing methods along a braced wall line shall be permitted in Seismic Design Categories A and B, and detached dwellings in Seismic Design Category C provided the length of required bracing in accordance with Table R602.10.3(1) or R602.10.3(3) is the highest value of all intermittent bracing methods used.
4. Mixing of continuous sheathing methods CS-WSP, CS-G and CS-PF along a braced wall line shall be permitted.
5. In Seismic Design Categories A and B, and for detached one- and two-family dwellings in Seismic Design Category C, mixing of intermittent bracing methods along the interior portion of a braced wall line with continuous sheathing methods CS-WSP, CS-G and CS-PF along the exterior portion of the same braced wall line shall be permitted. The length of required bracing shall be the highest value of all intermittent bracing methods used in accordance with Table R602.10.3(1) or R602.10.3(3) as adjusted by Tables R602.10.3(2) and R602.10.3(4), respectively. The requirements of Section R602.10.7 shall apply to each end of the continuously sheathed portion of the braced wall line.

R602.10.4.2 Continuous sheathing methods. Continuous sheathing methods require structural panel sheathing to be used on all sheathable surfaces on one side of a braced wall line including areas above and below openings and gable end walls and shall meet the requirements of Section R602.10.7.

R602.10.4.3 Braced wall panel interior finish material. Braced wall panels shall have gypsum wall board installed on the side of the wall opposite the bracing material. Gypsum wall board shall be not less than 1/2 inch (12.7 mm) in thickness and be fastened with nails or screws in accordance with Table R602.3(1) for exterior sheathing or Table R702.3.5 for interior gypsum wall board. Spacing of fasteners at panel edges for gypsum wall board opposite Method LIB bracing shall not exceed 8 inches (203 mm). Interior finish material shall not be glued in Seismic Design Categories D_0, D_1 and D_2.

Exceptions:

1. Interior finish material is not required opposite wall panels that are braced in accordance with Methods GB, BV-WSP, ABW, PFH, PFG and CS-PF, unless otherwise required by Section R302.6.
2. An approved interior finish material with an in-plane shear resistance equivalent to gypsum board shall be permitted to be substituted, unless otherwise required by Section R302.6.

3. Except for Method LIB, gypsum wall board is permitted to be omitted provided the required length of bracing in Tables R602.10.3(1) and R602.10.3(3) is multiplied by the appropriate adjustment factor in Tables R602.10.3(2) and R602.10.3(4) respectively, unless otherwise required by Section R302.6.

R602.10.5 Minimum length of a braced wall panel. The minimum length of a braced wall panel shall comply with Table R602.10.5. For Methods CS-WSP and CS-SFB, the minimum panel length shall be based on the adjacent clear opening height in accordance with Table R602.10.5 and Figure R602.10.5. When a panel has an opening on either side of differing heights, the taller opening height shall be used to determine the panel length.

R602.10.5.1 Contributing length. For purposes of computing the required length of bracing in Tables R602.10.3(1) and R602.10.3(3), the contributing length of each braced wall panel shall be as specified in Table R602.10.5.

R602.10.5.2 Partial credit. For Methods DWB, WSP, SFB, PBS, PCP and HPS in Seismic Design Categories A, B and C, panels between 36 inches and 48 inches (914 mm and 1219 mm)) in length shall be considered a braced wall panel and shall be permitted to partially contribute toward the required length of bracing in Tables R602.10.3(1) and R602.10.3(3), and the contributing length shall be determined from Table R602.10.5.2.

R602.10.6 Construction of Methods ABW, PFH, PFG, CS-PF and BV-WSP. Methods ABW, PFH, PFG, CS-PF and BV-WSP shall be constructed as specified in Sections R602.10.6.1 through R602.10.6.5.

R602.10.6.1 Method ABW: Alternate braced wall panels. Method ABW braced wall panels shall be constructed in accordance with Figure R602.10.6.1. The hold-down force shall be in accordance with Table R602.10.6.1.

R602.10.6.2 Method PFH: Portal frame with hold-downs. Method PFH braced wall panels shall be constructed in accordance with Figure R602.10.6.2.

R602.10.6.3 Method PFG: Portal frame at garage door openings in Seismic Design Categories A, B and C. Where supporting a roof or one story and a roof, a Method PFG braced wall panel constructed in accordance with Figure R602.10.6.3 shall be permitted on either side of garage door openings.

R602.10.6.4 Method CS-PF: Continuously sheathed portal frame. Continuously sheathed portal frame braced wall panels shall be constructed in accordance with Figure R602.10.6.4 and Table R602.10.6.4. The number of continuously sheathed portal frame panels in a single braced wall line shall not exceed four.

R602.10.6.5 Wall bracing for dwellings with stone and masonry veneer in Seismic Design Categories D_0, D_1 and D_2. Where stone and masonry veneer are installed in accordance with Section R703.7, wall bracing on exterior braced wall lines and braced wall lines on the interior of the building, backing or perpendicular to and laterally supporting veneered walls shall comply with this section. **

Where dwellings in Seismic Design Categories D_0, D_1 and D_2 have stone or masonry veneer installed in accordance with Section R703.7, and the veneer does not exceed the first-story height, wall bracing shall be in accordance with Section R602.10.3.

Where detached one- or two-family dwellings in Seismic Design Categories D_0, D_1 and D_2 have stone or masonry veneer installed in accordance with Section R703.7, and the veneer exceeds the first-story height, wall bracing at exterior braced wall lines and braced wall lines on the interior of the building shall be constructed using Method BV-WSP in accordance with this section and Figure R602.10.6.5. Cripple walls shall not be permitted, and required interior braced wall lines shall be supported on continuous foundations.

Townhouses in Seismic Design Categories D_0, D_1 and D_2 with stone or masonry veneer exceeding the first-story height shall be designed in accordance with accepted engineering practice.

R602.10.6.5.1 Length of bracing. The length of bracing along each braced wall line shall be the greater of that required by the design wind speed and braced wall line spacing in accordance with Table R602.10.3(1) as adjusted by the factors in the Table R602.10.3(2) or the Seismic Design Category and braced wall line length in accordance with Table R602.10.6.5. Angled walls shall be permitted to be counted in accordance with Section R602.10.1.4, and braced wall panel location shall be in accordance with Section R602.10.2.2. The seismic adjustment factors in Table R602.10.3(4) shall not be applied to the length of bracing determined using Table R602.10.6.5. In no case shall the minimum total length of bracing in a braced wall line, after all adjustments have been taken, be less than 48 inches (1219 mm) total.

R602.10.7 Ends of braced wall lines with continuous sheathing. Each end of a braced wall line with continuous sheathing shall have one of the conditions shown in Figure R602.10.7.

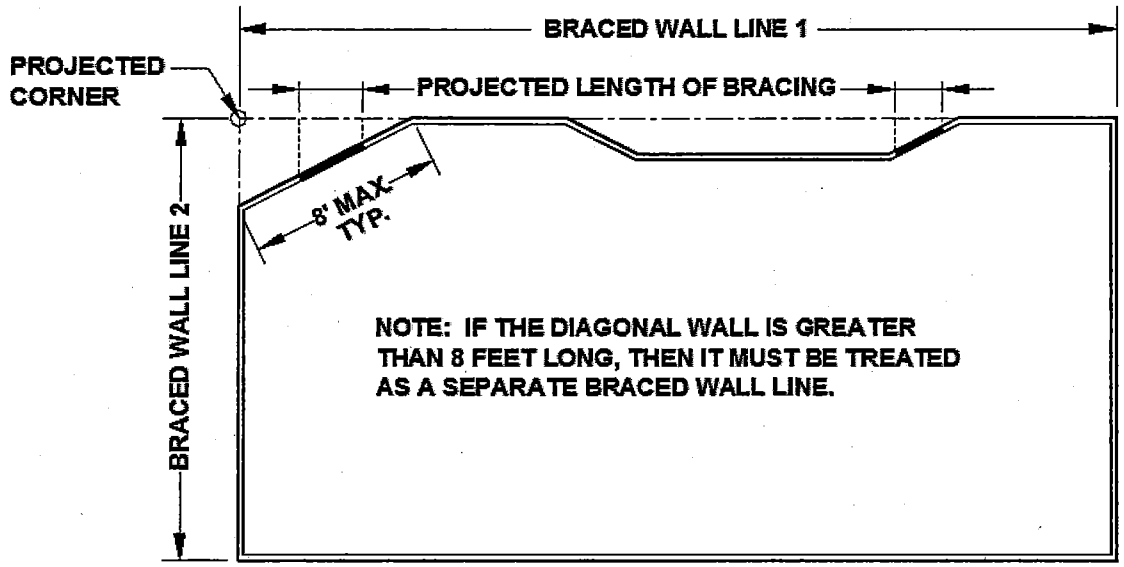

For SI: 1 foot = 304.8 mm.

FIGURE R602.10.1.4
ANGLED WALLS

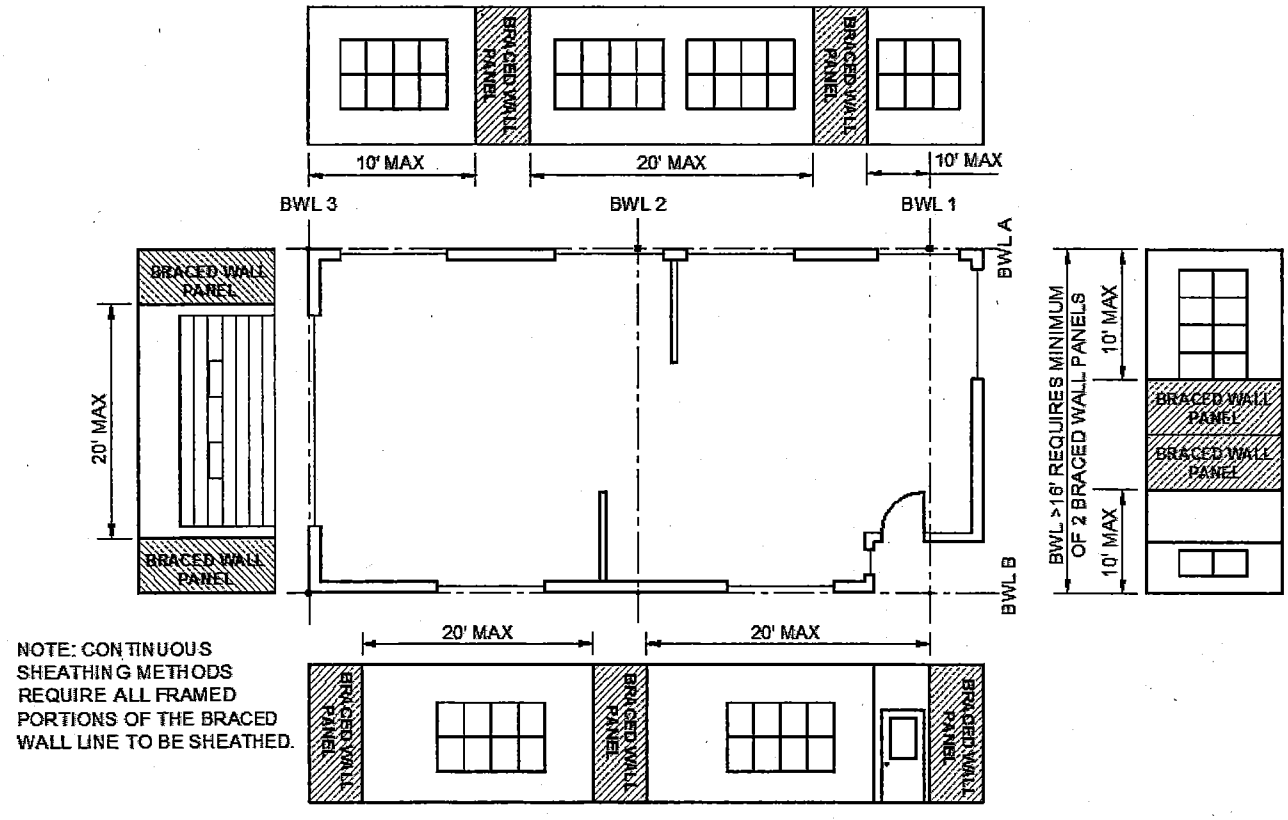

For SI: 1 foot = 304.8 mm.

FIGURE R602.10.2.2
LOCATION OF BRACED WALL PANELS

3891

TABLE R602.10.3(1)
BRACING REQUIREMENTS BASED ON WIND SPEED

• EXPOSURE CATEGORY B • 30 FOOT MEAN ROOF HEIGHT • 10 FOOT EAVE-TO-RIDGE HEIGHT • 10 FOOT WALL HEIGHT • 2 BRACED WALL LINES			MINIMUM TOTAL LENGTH (FEET) OF BRACED WALL PANELS REQUIRED ALONG EACH BRACED WALL LINE[a]			
Basic Wind Speed (mph)	**Story Location**	**Braced Wall Line Spacing (feet)**	**Method LIB[b]**	**Method GB**	**Methods DWB, WSP, SFB, PBS, PCP, HPS, CS-SFB[c]**	**Methods CS-WSP, CS-G, CS-PF**
≤ 85		10	3.5	3.5	2.0	1.5
		20	6.0	6.0	3.5	3.0
		30	8.5	8.5	5.0	4.5
		40	11.5	11.5	6.5	5.5
		50	14.0	14.0	8.0	7.0
		60	16.5	16.5	9.5	8.0
	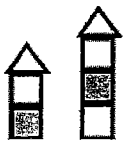	10	6.5	6.5	3.5	3.0
		20	11.5	11.5	6.5	5.5
		30	16.5	16.5	9.5	8.0
		40	21.5	21.5	12.5	10.5
		50	26.5	26.5	15.0	13.0
		60	31.5	31.5	18.0	15.5
		10	NP	9.0	5.5	4.5
		20	NP	17.0	10.0	8.5
		30	NP	24.5	14.0	12.0
		40	NP	32.0	18.0	15.5
		50	NP	39.0	22.5	19.0
		60	NP	46.5	26.5	22.5
≤ 90		10	3.5	3.5	2.0	2.0
		20	7.0	7.0	4.0	3.5
		30	9.5	9.5	5.5	5.0
		40	12.5	12.5	7.5	6.0
		50	15.5	15.5	9.0	7.5
		60	18.5	18.5	10.5	9.0
	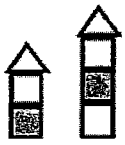	10	7.0	7.0	4.0	3.5
		20	13.0	13.0	7.5	6.5
		30	18.5	18.5	10.5	9.0
		40	24.0	24.0	14.0	12.0
		50	29.5	29.5	17.0	14.5
		60	35.0	35.0	20.0	17.0
		10	NP	10.5	6.0	5.0
		20	NP	19.0	11.0	9.5
		30	NP	27.5	15.5	13.5
		40	NP	35.5	20.5	17.5
		50	NP	44.0	25.0	21.5
		60	NP	52.0	30.0	25.5

(continued)

TABLE R602.10.3(1)—continued
BRACING REQUIREMENTS BASED ON WIND SPEED

• EXPOSURE CATEGORY B • 30 FOOT MEAN ROOF HEIGHT • 10 FOOT EAVE-TO-RIDGE HEIGHT • 10 FOOT WALL HEIGHT • 2 BRACED WALL LINES			MINIMUM TOTAL LENGTH (FEET) OF BRACED WALL PANELS REQUIRED ALONG EACH BRACED WALL LINE[a]			
Basic Wind Speed (mph)	**Story Location**	**Braced Wall Line Spacing (feet)**	**Method LIB[b]**	**Method GB**	**Methods DWB, WSP, SFB, PBS, PCP, HPS, CS-SFB[c]**	**Methods CS-WSP, CS-G, CS-PF**
≤ 100		10	4.5	4.5	2.5	2.5
		20	8.5	8.5	5.0	4.0
		30	12.0	12.0	7.0	6.0
		40	15.5	15.5	9.0	7.5
		50	19.0	19.0	11.0	9.5
		60	22.5	22.5	13.0	11.0
		10	8.5	8.5	5.0	4.5
		20	16.0	16.0	9.0	8.0
		30	23.0	23.0	13.0	11.0
		40	29.5	29.5	17.0	14.5
		50	36.5	36.5	21.0	18.0
		60	43.5	43.5	25.0	21.0
		10	NP	12.5	7.5	6.0
		20	NP	23.5	13.5	11.5
		30	NP	34.0	19.5	16.5
		40	NP	44.0	25.0	21.5
		50	NP	54.0	31.0	26.5
		60	NP	64.0	36.5	31.0
< 110[c]		10	5.5	5.5	3.0	3.0
		20	10.0	10.0	6.0	5.0
		30	14.5	14.5	8.5	7.0
		40	18.5	18.5	11.0	9.0
		50	23.0	23.0	13.0	11.5
		60	27.5	27.5	15.5	13.5
		10	10.5	10.5	6.0	5.0
		20	19.0	19.0	11.0	9.5
		30	27.5	27.5	16.0	13.5
		40	36.0	36.0	20.5	17.5
		50	44.0	44.0	25.5	21.5
		60	52.5	52.5	30.0	25.5
		10	NP	15.5	9.0	7.5
		20	NP	28.5	16.5	14.0
		30	NP	41.0	23.5	20.0
		40	NP	53.0	30.5	26.0
		50	NP	65.5	37.5	32.0
		60	NP	77.5	44.5	37.5

For SI: 1 inch = 25.4 mm, 1 foot = 305 mm, 1 mile per hour = 0.447 m/s.

a. Linear interpolation shall be permitted.

b. Method LIB shall have gypsum board fastened to at least one side with nails or screws in accordance withTable R602.3(1) for exterior sheathing or Table R702.3.5 for interior gypsum board. Spacing of fasteners at panel edges shall not exceed 8 inches.

c. Method CS-SFB does not apply where the wind speed is greater than 100 mph.

TABLE R602.10.3(2)
WIND ADJUSTMENT FACTORS TO THE REQUIRED LENGTH OF WALL BRACING

ADJUSTMENT BASED ON	STORY/ SUPPORTING	CONDITION	ADJUSTMENT FACTOR[a, b] [multiply length from Table R602.10.3(1) by this factor]	APPLICABLE METHODS
Exposure category	One-story structure	B	1.00	All methods
		C	1.20	
		D	1.50	
	Two-story structure	B	1.00	
		C	1.30	
		D	1.60	
	Three-story structure	B	1.00	
		C	1.40	
		D	1.70	
Roof eave-to-ridge height	Roof only	≤ 5 feet	0.70	
		10 feet	1.00	
		15 feet	1.30	
		20 feet	1.60	
	Roof + 1 floor	≤ 5 feet	0.85	
		10 feet	1.00	
		15 feet	1.15	
		20 feet	1.30	
	Roof + 2 floors	≤ 5 feet	0.90	
		10 feet	1.00	
		15 feet	1.10	
		20 feet	Not permitted	
Wall height adjustment	Any story	8 feet	0.90	
		9 feet	0.95	
		10 feet	1.00	
		11 feet	1.05	
		12 feet	1.10	
Number of braced wall lines (per plan direction)[c]	Any story	2	1.00	
		3	1.30	
		4	1.45	
		≥ 5	1.60	
Additional 800-pound hold-down device	Top story only	Fastened to the end studs of each braced wall panel and to the foundation or framing below	0.80	DWB, WSP, SFB, PBS, PCP, HPS
Interior gypsum board finish (or equivalent)	Any story	Omitted from inside face of braced wall panels	1.40	DWB, WSP, SFB,PBS, PCP, HPS, CS-WSP, CS-G, CS-SFB
Gypsum board fastening	Any story	4 inches o.c. at panel edges, including top and bottom plates, and all horizontal joints blocked	0.7	GB

For SI: 1 inch = 25.4 mm, 1 foot = 305 mm, 1 pound = 4.48 N.

a. Linear interpolation shall be permitted.

b. The total adjustment factor is the product of all applicable adjustment factors.

c. The adjustment factor is permitted to be 1.0 when determining bracing amounts for intermediate braced wall lines provided the bracing amounts on adjacent braced wall lines are based on a spacing and number that neglects the intermediate braced wall line.

TABLE R602.10.3(3)
BRACING REQUIREMENTS BASED ON SEISMIC DESIGN CATEGORY

• SOIL CLASS D[b] • WALL HEIGHT = 10 FEET • 10 PSF FLOOR DEAD LOAD • 15 PSF ROOF/CEILING DEAD LOAD • BRACED WALL LINE SPACING ≤ 25 FEET			MINIMUM TOTAL LENGTH (FEET) OF BRACED WALL PANELS REQUIRED ALONG EACH BRACED WALL LINE[a]				
Seismic Design Category	**Story Location**	**Braced Wall Line Length (feet)**	**Method LIB[c]**	**Method GB**	**Methods DWB, SFB, PBS, PCP, HPS, CS-SFB[d]**	**Method WSP**	**Methods CS-WSP, CS-G**
C (townhouses only)		10	2.5	2.5	2.5	1.6	1.4
		20	5.0	5.0	5.0	3.2	2.7
		30	7.5	7.5	7.5	4.8	4.1
		40	10.0	10.0	10.0	6.4	5.4
		50	12.5	12.5	12.5	8.0	6.8
		10	NP	4.5	4.5	3.0	2.6
		20	NP	9.0	9.0	6.0	5.1
		30	NP	13.5	13.5	9.0	7.7
		40	NP	18.0	18.0	12.0	10.2
		50	NP	22.5	22.5	15.0	12.8
		10	NP	6.0	6.0	4.5	3.8
		20	NP	12.0	12.0	9.0	7.7
		30	NP	18.0	18.0	13.5	11.5
		40	NP	24.0	24.0	18.0	15.3
		50	NP	30.0	30.0	22.5	19.1
D_0		10	NP	2.8	2.8	1.8	1.6
		20	NP	5.5	5.5	3.6	3.1
		30	NP	8.3	8.3	5.4	4.6
		40	NP	11.0	11.0	7.2	6.1
		50	NP	13.8	13.8	9.0	7.7
		10	NP	5.3	5.3	3.8	3.2
		20	NP	10.5	10.5	7.5	6.4
		30	NP	15.8	15.8	11.3	9.6
		40	NP	21.0	21.0	15.0	12.8
		50	NP	26.3	26.3	18.8	16.0
		10	NP	7.3	7.3	5.3	4.5
		20	NP	14.5	14.5	10.5	9.0
		30	NP	21.8	21.8	15.8	13.4
		40	NP	29.0	29.0	21.0	17.9
		50	NP	36.3	36.3	26.3	22.3

(continued)

TABLE R602.10.3(3)—continued
BRACING REQUIREMENTS BASED ON SEISMIC DESIGN CATEGORY

• SOIL CLASS D[b] • WALL HEIGHT = 10 FEET • 10 PSF FLOOR DEAD LOAD • 15 PSF ROOF/CEILING DEAD LOAD • BRACED WALL LINE SPACING ≤ 25 FEET			MINIMUM TOTAL LENGTH (FEET) OF BRACED WALL PANELS REQUIRED ALONG EACH BRACED WALL LINE[a]				
Seismic Design Category	**Story Location**	**Braced Wall Line Length (feet)**	**Method LIB[c]**	**Method GB**	**Methods DWB, SFB, PBS, PCP, HPS, CS-SFB[d]**	**Method WSP**	**Methods CS-WSP, CS-G**
D_1		10	NP	3.0	3.0	2.0	1.7
		20	NP	6.0	6.0	4.0	3.4
		30	NP	9.0	9.0	6.0	5.1
		40	NP	12.0	12.0	8.0	6.8
		50	NP	15.0	15.0	10.0	8.5
		10	NP	6.0	6.0	4.5	3.8
		20	NP	12.0	12.0	9.0	7.7
		30	NP	18.0	18.0	13.5	11.5
		40	NP	24.0	24.0	18.0	15.3
		50	NP	30.0	30.0	22.5	19.1
	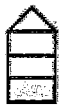	10	NP	8.5	8.5	6.0	5.1
		20	NP	17.0	17.0	12.0	10.2
		30	NP	25.5	25.5	18.0	15.3
		40	NP	34.0	34.0	24.0	20.4
		50	NP	42.5	42.5	30.0	25.5
D_2		10	NP	4.0	4.0	2.5	2.1
		20	NP	8.0	8.0	5.0	4.3
		30	NP	12.0	12.0	7.5	6.4
		40	NP	16.0	16.0	10.0	8.5
		50	NP	20.0	20.0	12.5	10.6
		10	NP	7.5	7.5	5.5	4.7
		20	NP	15.0	15.0	11.0	9.4
		30	NP	22.5	22.5	16.5	14.0
		40	NP	30.0	30.0	22.0	18.7
		50	NP	37.5	37.5	27.5	23.4
		10	NP	NP	NP	NP	NP
		20	NP	NP	NP	NP	NP
		30	NP	NP	NP	NP	NP
		40	NP	NP	NP	NP	NP
		50	NP	NP	NP	NP	NP
	Cripple wall below one- or two-story dwelling	10	NP	NP	NP	7.5	6.4
		20	NP	NP	NP	15.0	12.8
		30	NP	NP	NP	22.5	19.1
		40	NP	NP	NP	30.0	25.5
		50	NP	NP	NP	37.5	31.9

For SI: 1 inch = 25.4 mm, 1 foot = 305 mm, 1 pound per square foot = 0.0479 kPa.

a. Linear interpolation shall be permitted.

b. Wall bracing lengths are based on a soil site class "D." Interpolation of bracing length between the S_{ds} values associated with the Seismic Design Categories shall be permitted when a site-specific S_{ds} value is determined in accordance with Section 1613.3 of the *California Building Code.*

c. Method LIB shall have gypsum board fastened to at least one side with nails or screws per Table R602.3(1) for exterior sheathing or Table R702.3.5 for interior gypsum board. Spacing of fasteners at panel edges shall not exceed 8 inches.

d. Method CS-SFB applies in SDC C only.

TABLE R602.10.3(4)
SEISMIC ADJUSTMENT FACTORS TO THE REQUIRED LENGTH OF WALL BRACING

ADJUSTMENT BASED ON:	STORY/SUPPORTING	CONDITION	ADJUSTMENT FACTOR[a, b] [Multiply length from Table R602.10.3(3) by this factor]	APPLICABLE METHODS
Story height (Section 301.3)	Any story	≤ 10 feet	1.0	All methods
		> 10 feet and ≤ 12 feet	1.2	
Braced wall line spacing, townhouses in SDC C	Any story	≤ 35 feet	1.0	
		> 35 feet and ≤ 50 feet	1.43	
Braced wall line spacing, in SDC D_0, D_1, D_2[c]	Any story	> 25 feet and ≤ 30 feet	1.2	
		> 30 feet and ≤ 35 feet	1.4	
Wall dead load	Any story	> 8 psf and < 15 psf	1.0	
		< 8 psf	0.85	
Roof/ceiling dead load for wall supporting	Roof only or roof plus one or two stories	≤15 psf	1.0	
	Roof plus one or two stories	> 15 psf and ≤ 25 psf	1.1	
	Roof only	> 15 psf and ≤ 25 psf	1.2	
Walls with stone or masonry veneer, townhouses in SDC C[d, e]	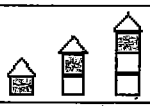	1.0		All intermittent and continuous methods
	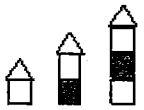	1.5		
	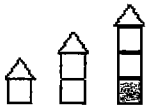	1.5		
Walls with stone or masonry veneer, detached one-and two-family dwellings in SDC $D_0 - D_2$[d]	Any story	See Table R602.10.6.5		BV-WSP
Interior gypsum board finish (or equivalent)	Any story	Omitted from inside face of braced wall panels	1.5	DWB, WSP, SFB, PBS, PCP, HPS, CS-WSP, CS-G, CS-SFB

For SI: 1 foot = 304.8 mm, 1 pound per square foot = 0.0479 kPa.

a. Linear interpolation shall be permitted.

b. The total length of bracing required for a given wall line is the product of all applicable adjustment factors.

c. The length-to-width ratio for the floor/roof *diaphragm* shall not exceed 3:1. The top plate lap splice nailing shall be a minimum of 12-16d nails on each side of the splice.

d. Applies to stone or masonry veneer exceeding the first story height. See Section R602.10.6.5 for requirements when stone or masonry veneer does not exceed the first story height.

e. The adjustment factor for stone or masonry veneer shall be applied to all exterior *braced wall lines* and all *braced wall lines* on the interior of the building, backing or perpendicular to and laterally supported veneered walls.

TABLE R602.10.4
BRACING METHODS

METHODS, MATERIAL		MINIMUM THICKNESS	FIGURE	CONNECTION CRITERIA[a]	
				Fasteners	Spacing
Intermittent Bracing Method	**LIB** Let-in-bracing	1 × 4 wood or approved metal straps at 45° to 60° angles for maximum 16″ stud spacing	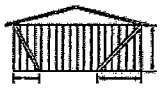	Wood: 2-8d common nails or 3-8d ($2^1/_2$″ long x 0.113″ dia.) nails	Wood: per stud and top and bottom plates
				Metal strap: per manufacturer	Metal: per manufacturer
	DWB Diagonal wood boards	$^3/_4$″(1″ nominal) for maximum 24″ stud spacing	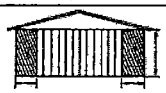	2-8d ($2^1/_2$″ long × 0.113″ dia.) nails or 2 - $1^3/_4$″ long staples	Per stud
	WSP Wood structural panel (See Section R604)	$^3/_8$″		Exterior sheathing per Table R602.3(3)	6″ edges 12″ field
				Interior sheathing per Table R602.3(1) or R602.3(2)	Varies by fastener
	BV-WSP[e] Wood Structural Panels with Stone or Masonry Veneer (See Section R602.10.6.5)	$^7/_{16}$″	See Figure R602.10.6.5	8d common ($2^1/_2$″ × 0.131) nails	4″ at panel edges 12″ at intermediate supports 4″ at braced wall panel end posts
	SFB Structural fiberboard sheathing	$^1/_2$″ or $^{25}/_{32}$″ for maximum 16″ stud spacing		$1^1/_2$″ long × 0.12″ dia. (for $^1/_2$″ thick sheathing) $1^3/_4$″ long × 0.12″ dia. (for $^{25}/_{32}$″ thick sheathing) galvanized roofing nails or 8d common ($2^1/_2$″ long × 0.131″ dia.) nails	3″ edges 6″ field
	GB Gypsum board	$^1/_2$″	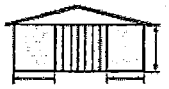	Nails or screws per Table R602.3(1) for exterior locations	For all braced wall panel locations: 7″ edges (including top and bottom plates) 7″ field
				Nails or screws per Table R702.3.5 for interior locations	
	PBS Particleboard sheathing (See Section R605)	$^3/_8$″ or $^1/_2$″ for maximum 16″ stud spacing		For $^3/_8$″, 6d common (2″ long × 0.113″ dia.) nails For $^1/_2$″, 8d common ($2^1/_2$″ long × 0.131″ dia.) nails	3″ edges 6″ field
	PCP Portland cement plaster	See Section R703.6 for maximum 16″ stud spacing	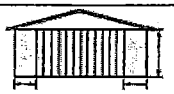	$1^1/_2$″ long, 11 gage, $^7/_{16}$″ dia. head nails or $^7/_8$″ long, 16 gage staples	6″ o.c. on all framing members
	HPS Hardboard panel siding	$^7/_{16}$″ for maximum 16″ stud spacing		0.092″ dia., 0.225″ dia. head nails with length to accommodate $1^1/_2$″ penetration into studs	4″ edges 8″ field
	ABW Alternate braced wall	$^3/_8$″		See Section R602.10.6.1	See Section R602.10.6.1

(continued)

TABLE R602.10.4—continued
BRACING METHODS

	METHODS, MATERIAL	MINIMUM THICKNESS	FIGURE	CONNECTION CRITERIA[a]	
				Fasteners	Spacing
Intermittent Bracing Methods	**PFH** Portal frame with hold-downs	$^3/_8$"	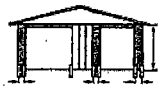	See Section R602.10.6.2	See Section R602.10.6.2
	PFG Portal frame at garage	$^7/_{16}$"		See Section R602.10.6.3	See Section R602.10.6.3
Continuous Sheathing Methods	**CS-WSP** Continuously sheathed wood structural panel	$^3/_8$"	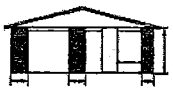	Exterior sheathing per Table R602.3(3)	6" edges 12" field
				Interior sheathing per Table R602.3(1) or R602.3(2)	Varies by fastener
	CS-G[b,c] Continuously sheathed wood structural panel adjacent to garage openings	$^3/_8$"		See Method CS-WSP	See Method CS-WSP
	CS-PF Continuously sheathed portal frame	$^7/_{16}$"		See Section R602.10.6.4	See Section R602.10.6.4
	CS-SFB[d] Continuously sheathed structural fiberboard	$^1/_2$" or $^{25}/_{32}$" for maximum 16" stud spacing		$1^1/_2$" long × 0.12" dia. (for $^1/_2$" thick sheathing) $1^3/_4$" long × 0.12" dia. (for $^{25}/_{32}$" thick sheathing) galvanized roofing nails or 8d common ($2^1/_2$" long × 0.131" dia.) nails	3" edges 6" field

For SI: 1 inch = 25.4 mm, 1 foot = 305 mm, 1 degree = 0.0175 rad, 1 pound per square foot = 47.8 N/m^2, 1 mile per hour = 0.447 m/s.

a. Adhesive attachment of wall sheathing, including Method GB, shall not be permitted in Seismic Design Categories C, D_0, D_1 and D_2.

b. Applies to panels next to garage door opening when supporting gable end wall or roof load only. May only be used on one wall of the garage. In Seismic Design Categories D_0, D_1 and D_2 roof covering dead load may not exceed 3 psf.

c. Garage openings adjacent to a Method CS-G panel shall be provided with a header in accordance with Table R502.5(1). A full height clear opening shall not be permitted adjacent to a Method CS-G panel.

d. Method CS-SFB does not apply in Seismic Design Categories D_0, D_1 and D_2 and in areas where the wind speed exceeds 100 mph.

e. Method applies to detached one- and two-family dwellings in Seismic Design Categories D_0 through D_2 only.

TABLE R602.10.5
MINIMUM LENGTH OF BRACED WALL PANELS

METHOD (See Table R602.10.4)		MINIMUM LENGTH[a] (inches)					CONTRIBUTING LENGTH (inches)
		Wall Height					
		8 feet	9 feet	10 feet	11 feet	12 feet	
DWB, WSP, SFB, PBS, PCP, HPS, BV-WSP		48	48	48	53	58	Actual[b]
GB		48	48	48	53	58	Double sided = Actual Single sided = 0.5 × Actual
LIB		55	62	69	NP	NP	Actual[b]
ABW	SDC A, B and C, wind speed < 110 mph	28	32	34	38	42	48
	SDC D_0, D_1 and D_2, wind speed < 110 mph	32	32	34	NP	NP	
PFH	Supporting roof only	16	16	16	18[c]	20[c]	48
	Supporting one story and roof	24	24	24	27[c]	29[c]	48
PFG		24	27	30	33[d]	36[d]	1.5 × Actual[b]
CS-G		24	27	30	33	36	Actual[b]
CS-PF		16	18	20	22[e]	24[e]	Actual[b]
CS-WSP, CS-SFB	Adjacent clear opening height (inches)						
	≤ 64	24	27	30	33	36	Actual[b]
	68	26	27	30	33	36	
	72	27	27	30	33	36	
	76	30	29	30	33	36	
	80	32	30	30	33	36	
	84	35	32	32	33	36	
	88	38	35	33	33	36	
	92	43	37	35	35	36	
	96	48	41	38	36	36	
	100	—	44	40	38	38	
	104	—	49	43	40	39	
	108	—	54	46	43	41	
	112	—	—	50	45	43	
	116	—	—	55	48	45	
	120	—	—	60	52	48	
	124	—	—	—	56	51	
	128	—	—	—	61	54	
	132	—	—	—	66	58	
	136	—	—	—	—	62	
	140	—	—	—	—	66	
	144	—	—	—	—	72	

For SI: 1 inch = 25.4 mm, 1 foot = 304.8 mm, 1 mile per hour = 0.447 m/s.
NP = Not Permitted.
a. Linear interpolation shall be permitted.
b. Use the actual length when it is greater than or equal to the minimum length.
c. Maximum header height for PFH is 10 feet in accordance with Figure R602.10.6.2, but wall height may be increased to 12 feet with pony wall.
d. Maximum opening height for PFG is 10 feet in accordance with Figure R602.10.6.3, but wall height may be increased to 12 feet with pony wall.
e. Maximum opening height for CS-PF is 10 feet in accordance with Figure R602.10.6.4, but wall height may be increased to 12 feet with pony wall.

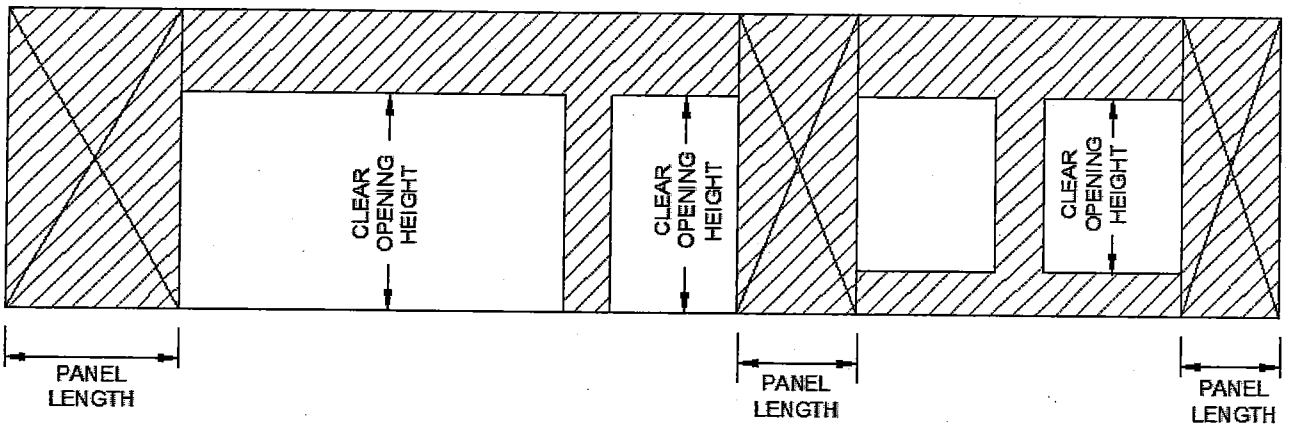

FIGURE R602.10.5
BRACED WALL PANELS WITH CONTINUOUS SHEATHING

TABLE R602.10.5.2
PARTIAL CREDIT FOR BRACED WALL PANELS LESS THAN 48 INCHES IN ACTUAL LENGTH

ACTUAL LENGTH OF BRACED WALL PANEL (inches)	CONTRIBUTING LENGTH OF BRACED WALL PANEL (inches)[a]	
	8-foot Wall Height	9-foot Wall Height
48	48	48
42	36	36
36	27	N/A

For SI: 1 inch = 25.4 mm, 1 foot = 304.8 mm.
N/A = Not Applicable.
a. Linear interpolation shall be permitted.

TABLE R602.10.6.1
MINIMUM HOLD-DOWN FORCES FOR METHOD ABW BRACED WALL PANELS

SEISMIC DESIGN CATEGORY AND WIND SPEED	SUPPORTING/STORY	HOLD DOWN FORCE (pounds)				
		Height of Braced Wall Panel				
		8 feet	9 feet	10 feet	11 feet	12 feet
SDC A, B and C Wind speed < 110 mph	One story	1,800	1,800	1,800	2,000	2,200
	First of two stories	3,000	3,000	3,000	3,300	3,600
SDC D_o, D_1 and D_2 Wind speed < 110 mph	One story	1,800	1,800	1,800	NP	NP
	First of two stories	3,000	3,000	3,000	NP	NP

For SI: 1 inch = 25.4 mm, 1 foot = 304.8 mm, 1 pound = 4.45 N, 1 mile per hour = 0.447 m/s.
NP = Not Permitted.

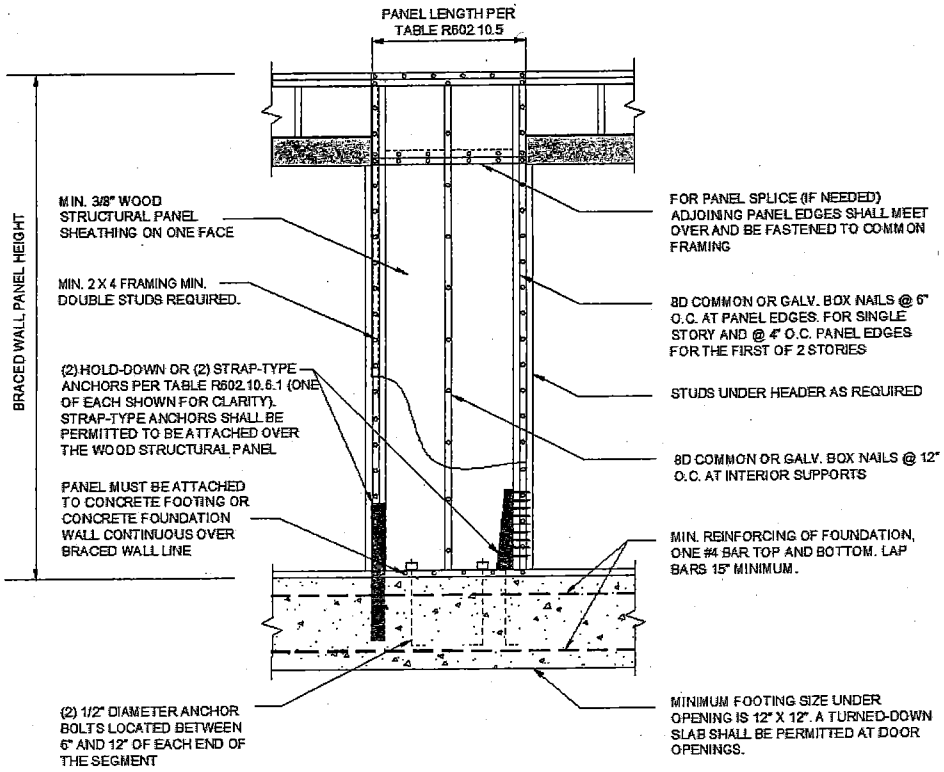

For SI: 1 inch = 25.4 mm.

FIGURE R602.10.6.1
METHOD ABW—ALTERNATE BRACED WALL PANEL

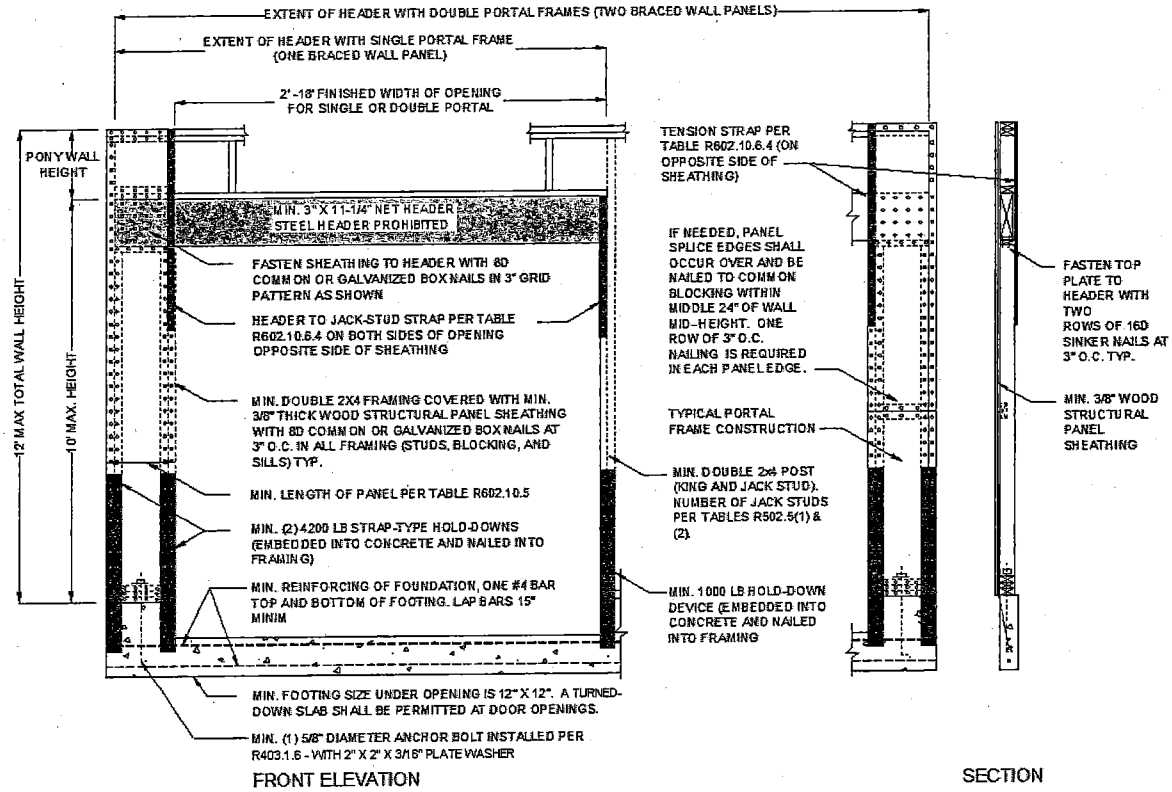

For SI: 1 inch = 25.4 mm, 1 foot = 304.8 mm.

FIGURE R602.10.6.2
METHOD PFH—PORTAL FRAME WITH HOLD-DOWNS

3902

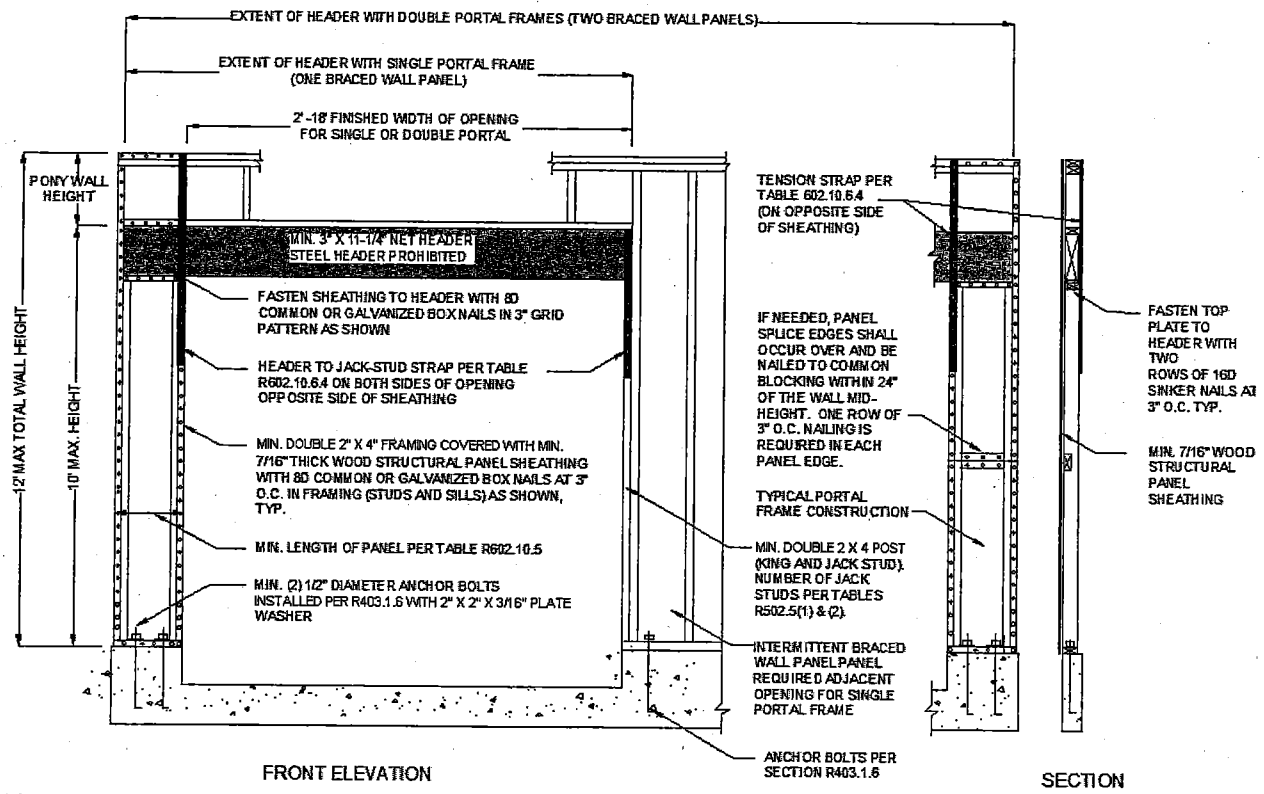

For SI: 1 inch = 25.4 mm, 1 foot = 304.8 mm.

FIGURE R602.10.6.3
METHOD PFG—PORTAL FRAME AT GARAGE DOOR OPENINGS IN SEISMIC DESIGN CATEGORIES A, B AND C

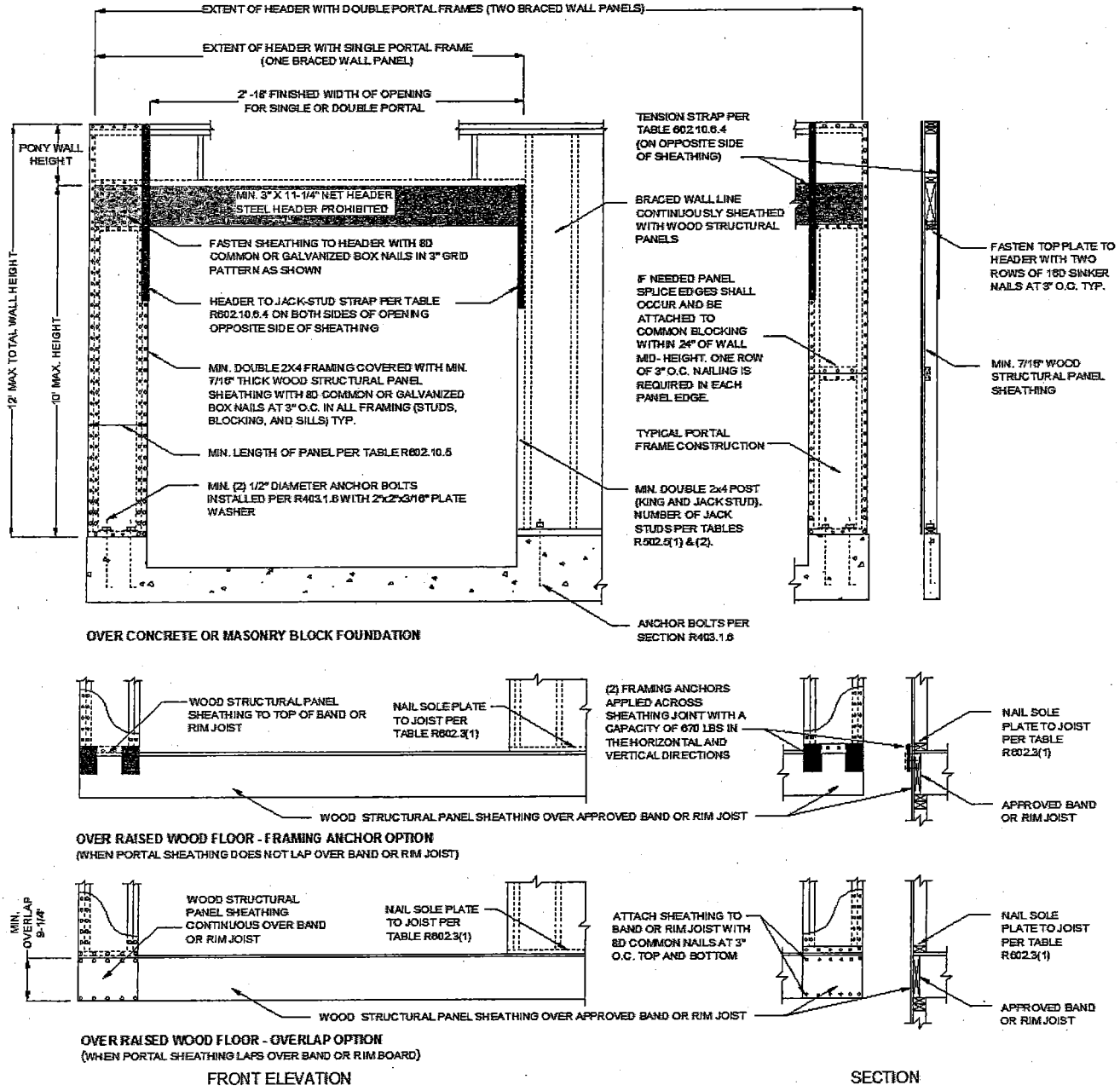

For SI: 1 inch = 25.4 mm, 1 foot = 304.8 mm.

FIGURE R602.10.6.4
METHOD CS-PF—CONTINUOUSLY SHEATHED PORTAL FRAME PANEL CONSTRUCTION

TABLE R602.10.6.4
TENSION STRAP CAPACITY REQUIRED FOR RESISTING WIND PRESSURES PERPENDICULAR TO METHOD PFH, PFG AND CS-PF BRACED WALL PANELS

MINIMUM WALL STUD FRAMING NOMINAL SIZE AND GRADE	MAXIMUM PONY WALL HEIGHT (feet)	MAXIMUM TOTAL WALL HEIGHT (feet)	MAXIMUM OPENING WIDTH (feet)	TENSION STRAP CAPACITY REQUIRED (pounds)[a, b]					
				Basic Wind Speed (mph)					
				85	90	100	85	90	100
				Exposure B			Exposure C		
2 × 4 No. 2 Grade	0	10	18	1,000	1,000	1,000	1,000	1,000	1,000
	1	10	9	1,000	1,000	1,000	1,000	1,000	1,275
			16	1,000	1,000	1,750	1,800	2,325	3,500
			18	1,000	1,200	2,100	2,175	2,725	DR
	2	10	9	1,000	1,000	1,025	1,075	1,550	2,500
			16	1,525	2,025	3,125	3,200	3,900	DR
			18	1,875	2,400	3,575	3,700	DR	DR
	2	12	9	1,000	1,200	2,075	2,125	2,750	4,000
			16	2,600	3,200	DR	DR	DR	DR
			18	3,175	3,850	DR	DR	DR	DR
	4	12	9	1,775	2,350	3,500	3,550	DR	DR
			16	4,175	DR	DR	DR	DR	DR
2 × 6 Stud Grade	2	12	9	1,000	1,000	1,325	1,375	1,750	2,550
			16	1,650	2,050	2,925	3,000	3,550	DR
			18	2,025	2,450	3,425	3,500	4,100	DR
	4	12	9	1,125	1,500	2,225	2,275	2,775	3,800
			16	2,650	3,150	DR	DR	DR	DR
			18	3,125	3,675	DR	DR	DR	DR

For SI: 1 inch = 25.4 mm, 1 foot = 304.8 mm, 1 pound = 4.45 N.

a. DR = design required.

b. Strap shall be installed in accordance with manufacturer's recommendations.

TABLE R602.10.6.5
METHOD BV-WSP WALL BRACING REQUIREMENTS

SEISMIC DESIGN CATEGORY	STORY	BRACED WALL LINE LENGTH (FEET)					SINGLE-STORY HOLD-DOWN FORCE (pounds)[a]	CUMULATIVE HOLD-DOWN FORCE (pounds)[b]
		10	20	30	40	50		
		MINIMUM TOTAL LENGTH (FEET) OF BRACED WALL PANELS REQUIRED ALONG EACH BRACED WALL LINE						
D_0	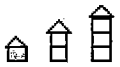	4.0	7.0	10.5	14.0	17.5	N/A	—
		4.0	7.0	10.5	14.0	17.5	1900	—
		4.5	9.0	13.5	18.0	22.5	3500	5400
		6.0	12.0	18.0	24.0	30.0	3500	8900
D_1		4.5	9.0	13.5	18.0	22.5	2100	—
		4.5	9.0	13.5	18.0	22.5	3700	5800
		6.0	12.0	18.0	24.0	30.0	3700	9500
D_2		5.5	11.0	16.5	22.0	27.5	2300	—
		5.5	11.0	16.5	22.0	27.5	3900	6200
		NP	NP	NP	NP	NP	N/A	N/A

For SI: 1 inch = 25.4 mm, 1 foot = 304.8 mm, 1 pound per square foot = 0.479 kPa, 1 pound-force = 4.448 N.

NP = Not Permitted.

N/A = Not Applicable.

a. Hold-down force is minimum allowable stress design load for connector providing uplift tie from wall framing at end of braced wall panel at the noted story to wall framing at end of braced wall panel at the story below, or to foundation or foundation wall. Use single-story hold-down force where edges of braced wall panels do not align; a continuous load path to the foundation shall be maintained.

b. Where hold-down connectors from stories above align with stories below, use cumulative hold-down force to size middle- and bottom-story hold-down connectors.

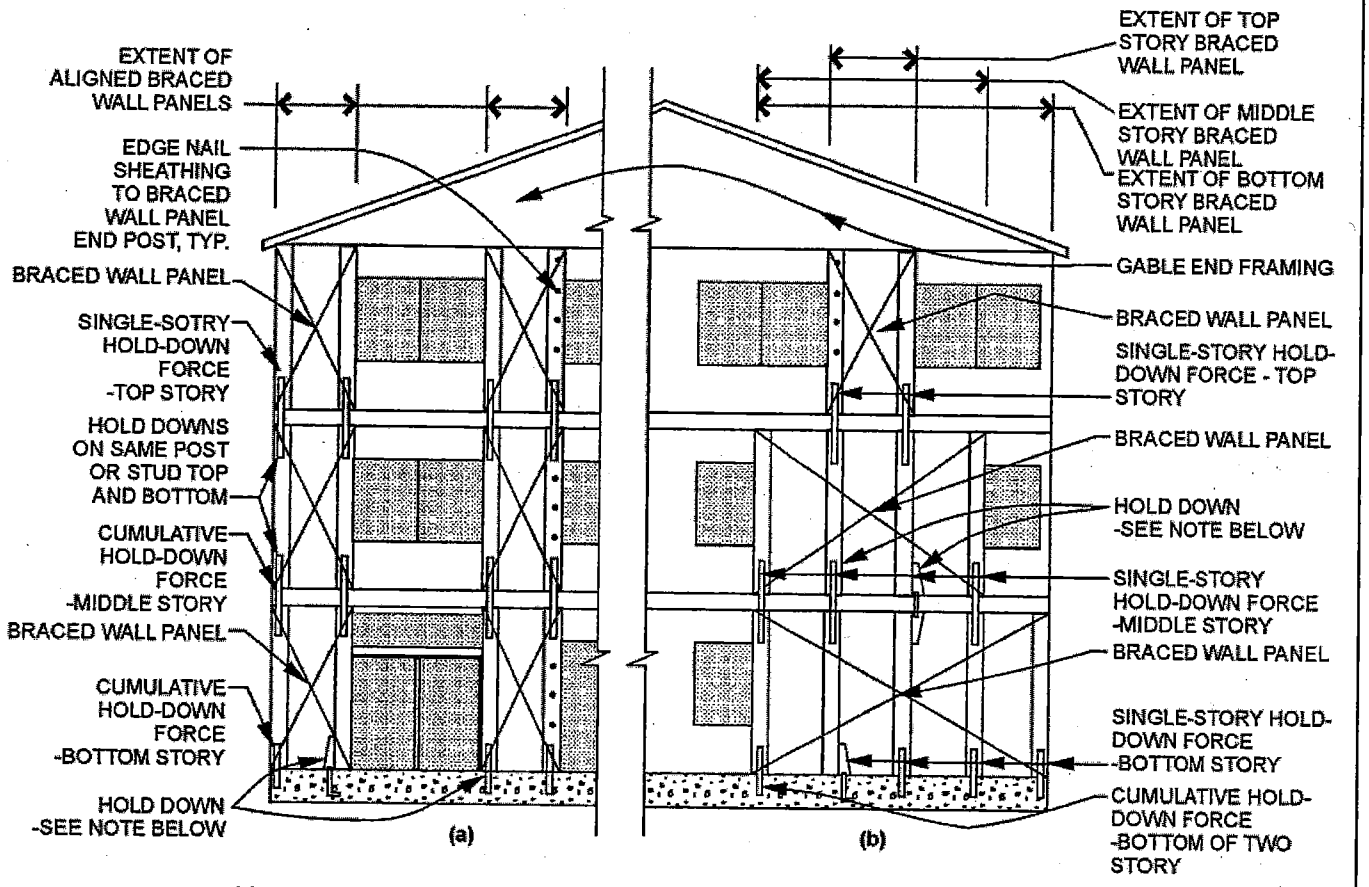

(a) Braced wall panels stacked (aligned story to story) Use cumulative hold-down force. (b) Braced wall panels mixed stacked and not stacked. Use hold-down force as noted.

Note: Hold downs should be strap ties, tension ties, or other approved hold-down devices and shall be installed in accordance with the manufacturer's instructions.

FIGURE R602.10.6.5
METHOD BV-WSP—WALL BRACING FOR DWELLINGS WITH STONE AND MASONRY VENEER IN SEISMIC DESIGN CATEGORIES D_0, D_1 and D_2

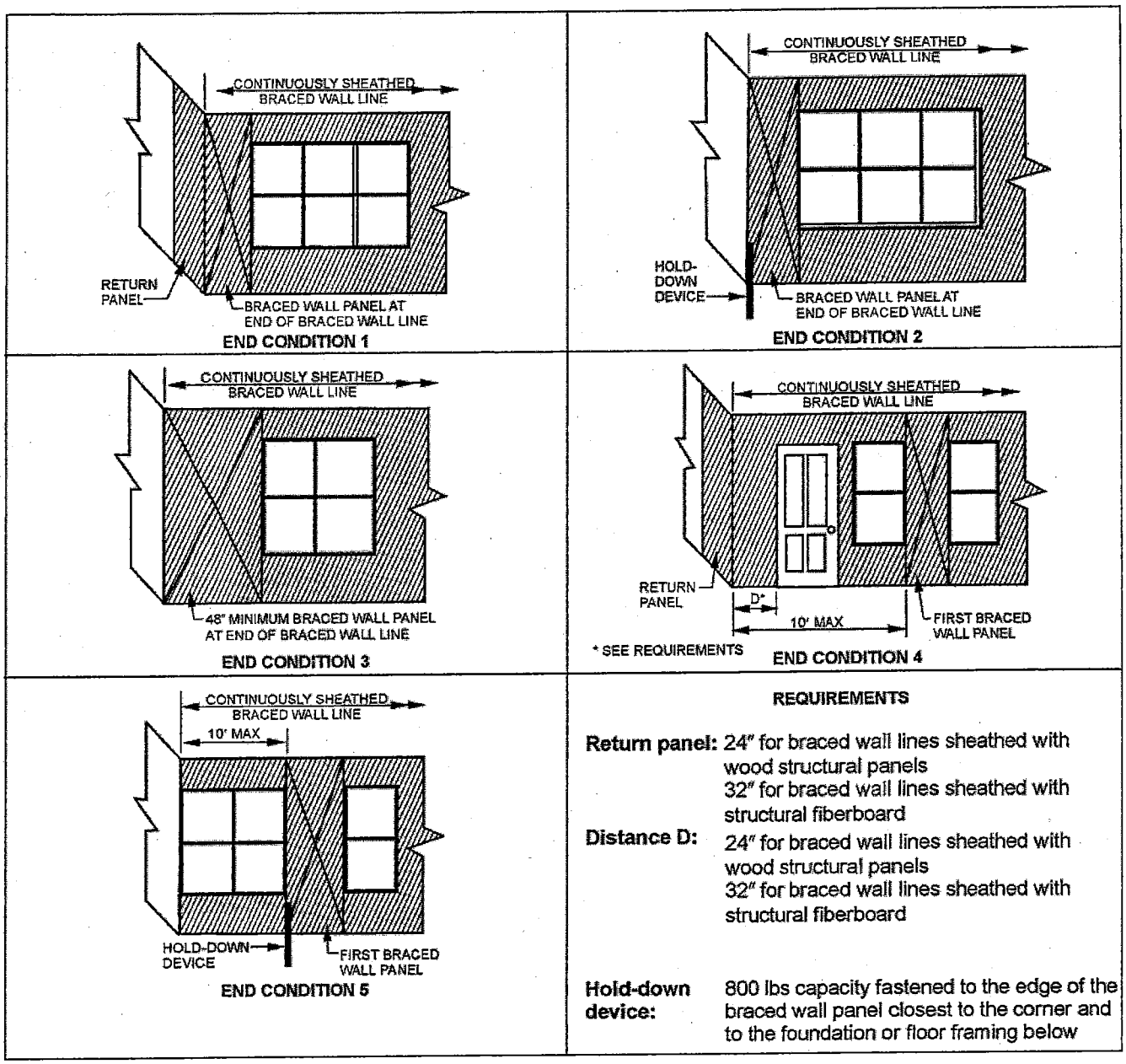

For SI: 1 inch = 25.4 mm, 1 foot = 304.8 mm, 1 pound = 4.45 N.

FIGURE R602.10.7
END CONDITIONS FOR BRACED WALL LINES WITH CONTINUOUS SHEATHING

R602.10.8 Braced wall panel connections. Braced wall panels shall be connected to floor framing or foundations as follows:

1. Where joists are perpendicular to a braced wall panel above or below, a rim joist, band joist or blocking shall be provided along the entire length of the braced wall panel in accordance with Figure R602.10.8(1). Fastening of top and bottom wall plates to framing, rim joist, band joist and/or blocking shall be in accordance with Table R602.3(1).
2. Where joists are parallel to a braced wall panel above or below, a rim joist, end joist or other parallel framing member shall be provided directly above and below the braced wall panel in accordance with Figure R602.10.8(2). Where a parallel framing member cannot be located directly above and below the panel, full-depth blocking at 16-inch (406 mm) spacing shall be provided between the parallel framing members to each side of the braced wall panel in accordance with Figure R602.10.8(2). Fastening of blocking and wall plates shall be in accordance with Table R602.3(1) and Figure R602.10.8(2).
3. Connections of braced wall panels to concrete or masonry shall be in accordance with Section R403.1.6.

R602.10.8.1 Braced wall panel connections for Seismic Design Categories D_0, D_1 and D_2. Braced wall panels shall be fastened to required foundations in accordance with Section R602.11.1, and top plate lap splices shall be face-nailed with at least eight 16d nails on each side of the splice.

R602.10.8.2 Connections to roof framing. Top plates of exterior braced wall panels shall be attached to rafters or roof trusses above in accordance with Table R602.3(1) and this section. Where required by this section, blocking between rafters or roof trusses shall be attached to top plates of braced wall panels and to rafters and roof trusses in accordance with Table R602.3(1). A continuous band, rim, or header joist or roof truss parallel to the braced wall panels shall be permitted to replace the blocking required by this section. Blocking shall not be required over openings in continuously-sheathed braced wall lines. In addition to the requirements of this section, lateral support shall be provided for rafters and ceiling joists in accordance with Section R802.8 and for trusses in accordance with Section R802.10.3. Roof ventilation shall be provided in accordance with Section R806.1.

1. For Seismic Design Categories A, B and C and wind speeds less than 100 mph (45 m/s) where the distance from the top of the braced wall panel to the top of the rafters or roof trusses above is $9^1/_4$ inches (235 mm) or less, blocking between rafters or roof trusses shall not be required. Where the distance from the top of the braced wall panel to the top of the rafters or roof trusses above is between $9^1/_4$ inches (235 mm) and $15^1/_4$ inches (387 mm), blocking between rafters or roof trusses shall be provided above the braced wall panel in accordance with Figure R602.10.8.2(1).
2. For Seismic Design Categories D_0, D_1 and D_2 or wind speeds of 100 mph (45 m/s) or greater, where the distance from the top of the braced wall panel to the top of the rafters or roof trusses is $15^1/_4$ inches (387 mm) or less, blocking between rafters or roof trusses shall be provided above the braced wall panel in accordance with Figure R602.10.8.2(1).
3. Where the distance from the top of the braced wall panel to the top of rafters or roof trusses exceeds $15^1/_4$ inches (387 mm), the top plates of the braced wall panel shall be connected to perpendicular rafters or roof trusses above in accordance with one or more of the following methods:
   - 3.1. Soffit blocking panels constructed in accordance with Figure R602.10.8.2(2);
   - 3.2. Vertical blocking panels constructed in accordance with Figure R602.10.8.2(3);
   - 3.3. Full-height engineered blocking panels designed in accordance with the AF&PA WFCM; or
   - 3.4. Blocking, blocking panels, or other methods of lateral load transfer designed in accordance with accepted engineering practice.

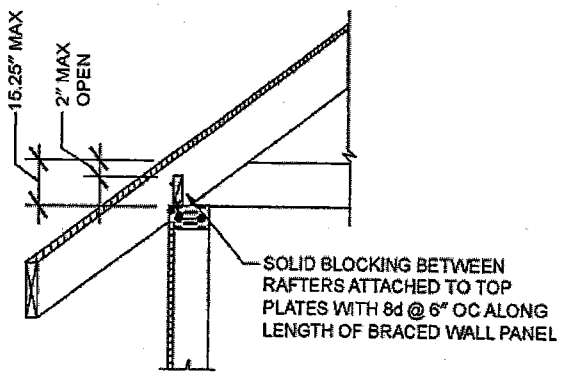

For SI: 1 inch = 25.4 mm.

FIGURE R602.10.8.2(1)
BRACED WALL PANEL CONNECTION TO PERPENDICULAR RAFTERS

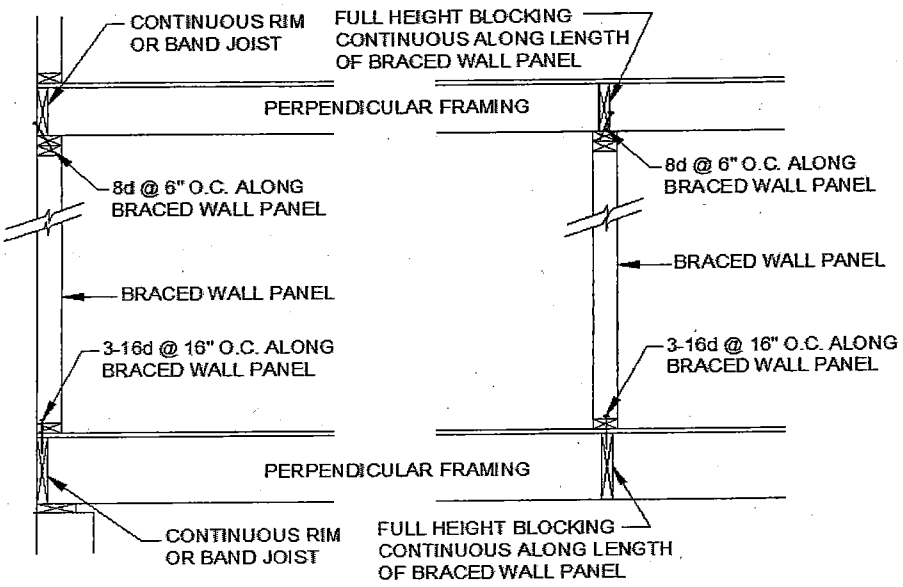

For SI: 1 inch = 25.4 mm.

FIGURE R602.10.8(1)
BRACED WALL PANEL CONNECTION WHEN PERPENDICULAR TO FLOOR/CEILING FRAMING

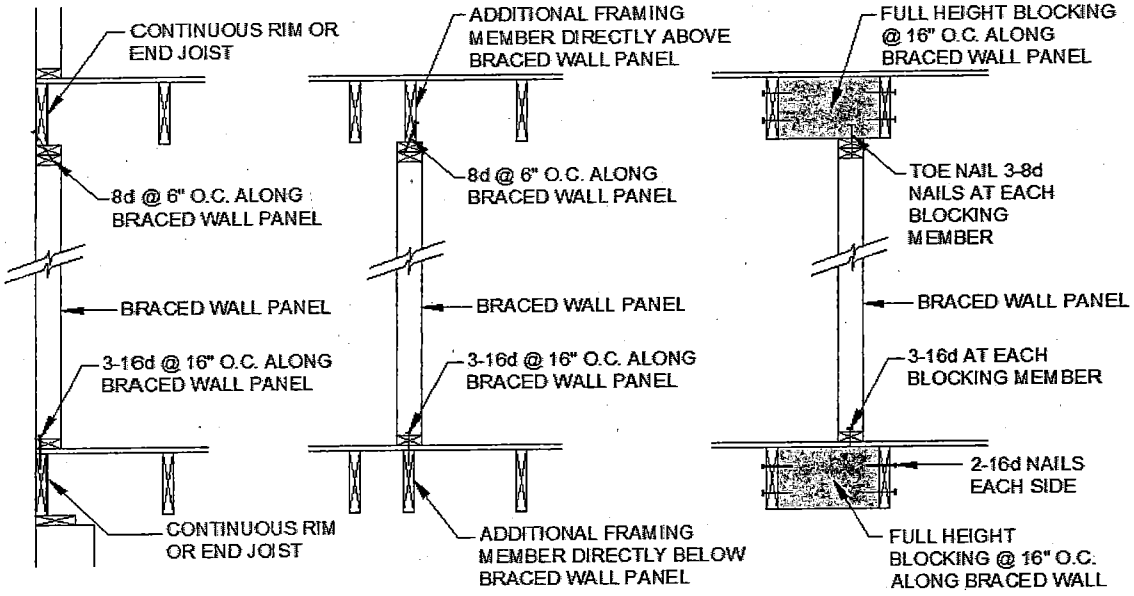

For SI: 1 inch = 25.4 mm.

FIGURE R602.10.8(2)
BRACED WALL PANEL CONNECTION WHEN PARALLEL TO FLOOR/CEILING FRAMING

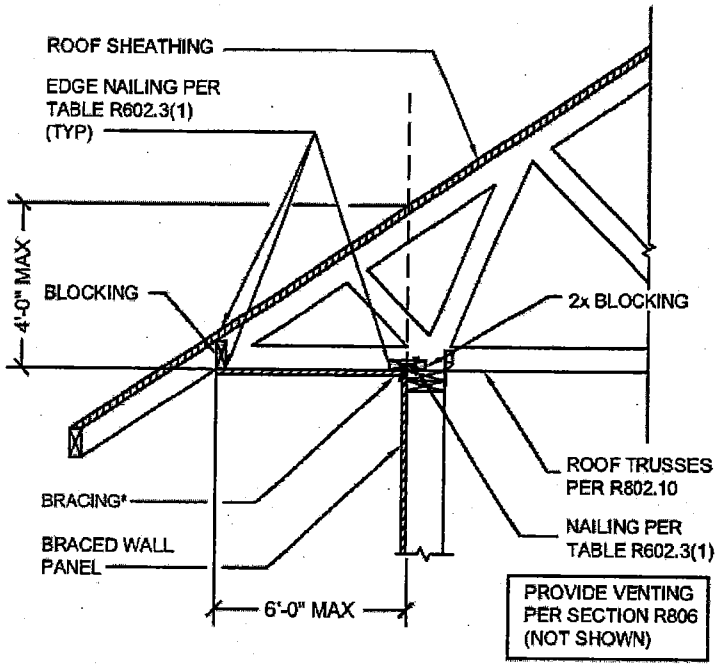

For SI: 1 inch = 25.4 mm, 1 foot = 304.8 mm.
a. Methods of bracing shall be as described in Section R602.10.4.

FIGURE R602.10.8.2(2)
BRACED WALL PANEL CONNECTION OPTION TO PERPENDICULAR RAFTERS OR ROOF TRUSSES

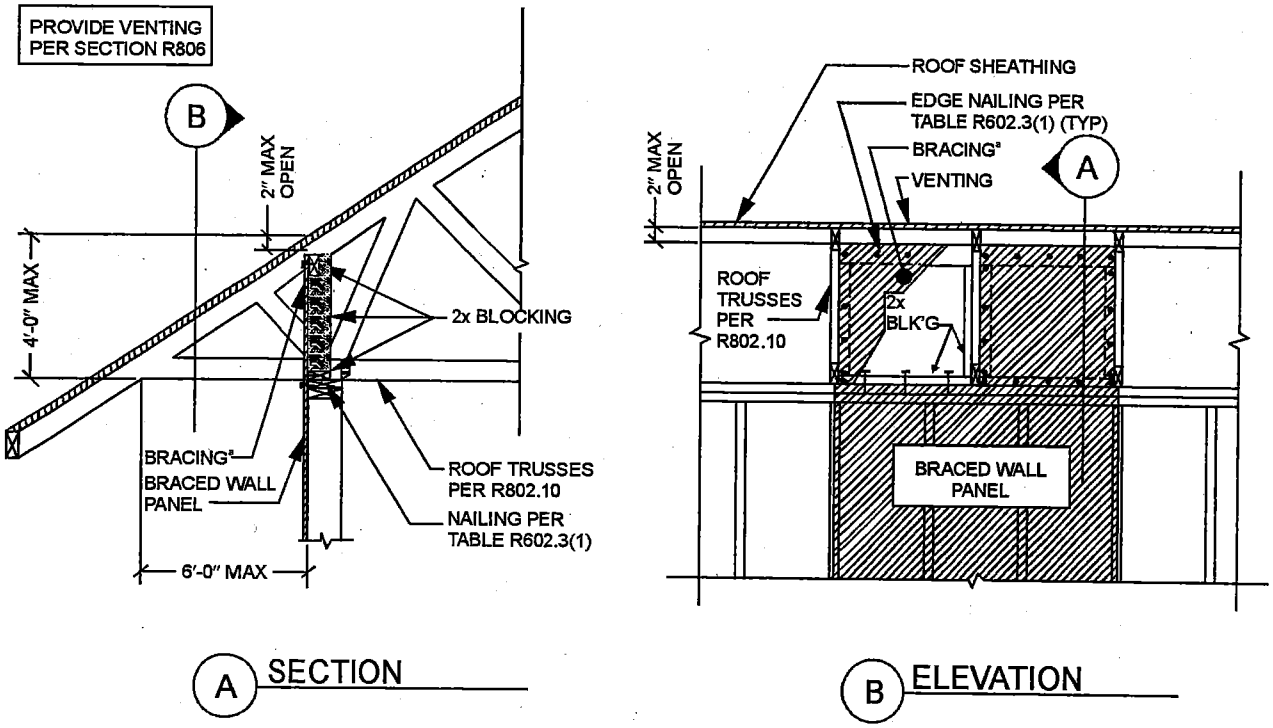

For SI: 1 inch = 25.4 mm, 1 foot = 304.8 mm.
a. Methods of bracing shall be as described in Section R602.10.4.

FIGURE R602.10.8.2(3)
BRACED WALL PANEL CONNECTION OPTION TO PERPENDICULAR RAFTERS OR ROOF TRUSSES

R602.10.9 Braced wall panel support. Braced wall panel support shall be provided as follows:

1. Cantilevered floor joists complying with Section R502.3.3 shall be permitted to support braced wall panels.
2. Raised floor system post or pier foundations supporting braced wall panels shall be designed in accordance with accepted engineering practice.
3. Masonry stem walls with a length of 48 inches (1219 mm) or less supporting braced wall panels shall be reinforced in accordance with Figure R602.10.9. Masonry stem walls with a length greater than 48 inches (1219 mm) supporting braced wall panels shall be constructed in accordance with Section R403.1 Methods ABW and PFH shall not be permitted to attach to masonry stem walls.
4. Concrete stem walls with a length of 48 inches (1219 mm) or less, greater than 12 inches (305 mm) tall and less than 6 inches (152 mm) thick shall have reinforcement sized and located in accordance with Figure R602.10.9.

R602.10.9.1 Braced wall panel support for Seismic Design Category D_2. In one-story buildings located in Seismic Design Category D_2, braced wall panels shall be supported on continuous foundations at intervals not exceeding 50 feet (15 240 mm). In two-story buildings located in Seismic Design Category D_2, all braced

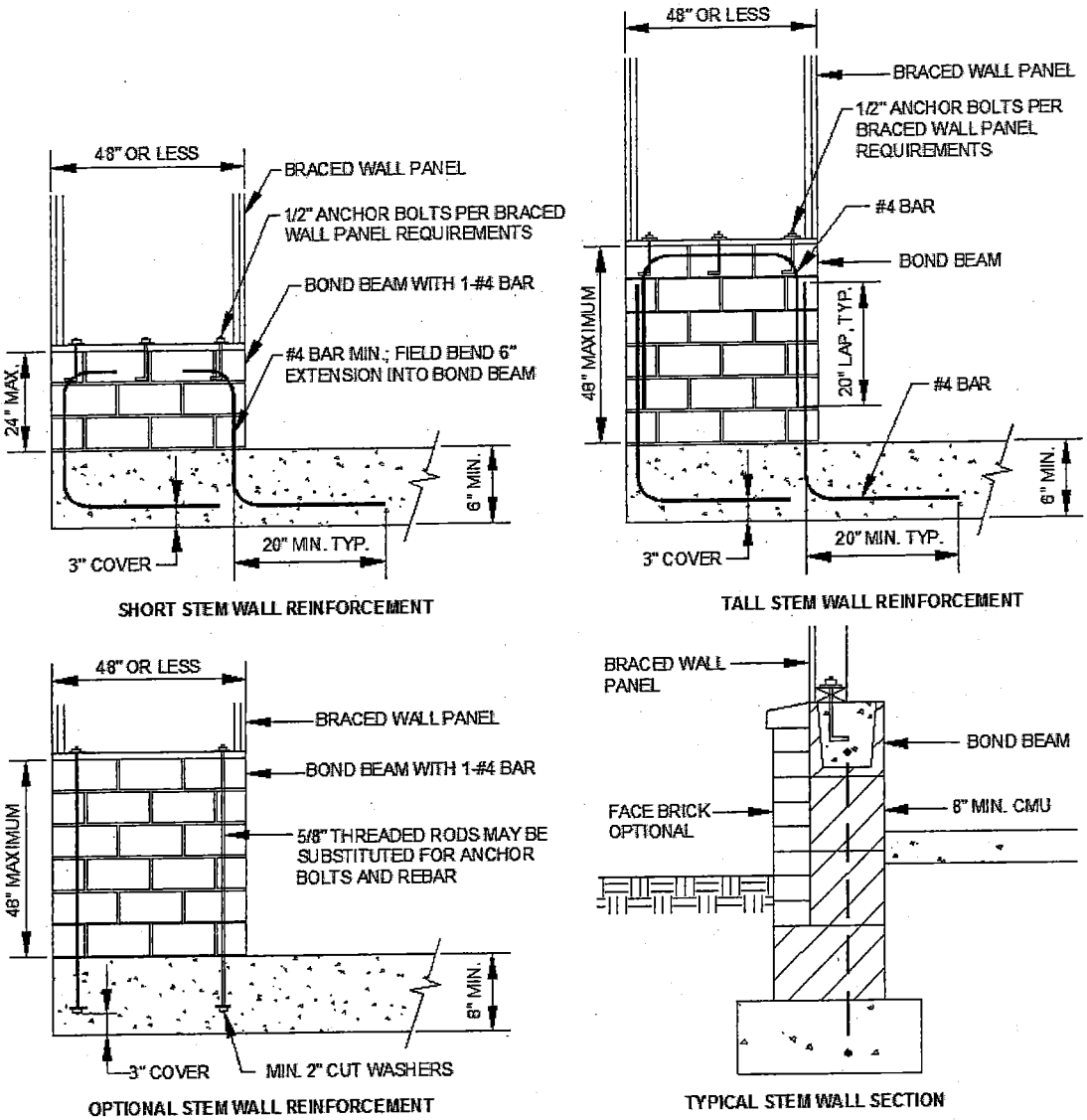

NOTE: GROUT BOND BEAMS AND ALL CELLS WHICH CONTAIN REBAR, THREADED RODS AND ANCHOR BOLTS.

For SI: 1 inch = 25.4 mm.

FIGURE R602.10.9
MASONRY STEM WALLS SUPPORTING BRACED WALL PANELS

wall panels shall be supported on continuous foundations.

Exception: Two-story buildings shall be permitted to have interior braced wall panels supported on continuous foundations at intervals not exceeding 50 feet (15 240 mm) provided that:

1. The height of cripple walls does not exceed 4 feet (1219 mm).
2. First-floor braced wall panels are supported on doubled floor joists, continuous blocking or floor beams.
3. The distance between bracing lines does not exceed twice the building width measured parallel to the braced wall line.

R602.10.10 Panel joints. All vertical joints of panel sheathing shall occur over, and be fastened to, common studs. Horizontal joints in braced wall panels shall occur over, and be fastened to, common blocking of a minimum $1^1/_2$ inch (38 mm) thickness.

Exceptions:

1. Vertical joints of panel sheathing shall be permitted to occur over double studs, where adjoining panel edges are attached to separate studs with the required panel edge fastening schedule, and the adjacent studs are attached together with two rows of 10d box nails [3 inches by 0.128 inch (76.2 mm by 3.25 mm)] at 10 inches o.c. (254 mm).
2. Blocking at horizontal joints shall not be required in wall segments that are not counted as braced wall panels.
3. Where the bracing length provided is at least twice the minimum length required by Table R602.10.3(1) and Table R602.10.3(3) blocking at horizontal joints shall not be required in braced wall panels constructed using Methods WSP, SFB, GB, PBS or HPS.
4. When Method GB panels are installed horizontally, blocking of horizontal joints is not required.

R602.10.11 Cripple wall bracing. Cripple walls shall be constructed in accordance with Section R602.9 and braced in accordance with this section. Cripple walls shall be braced with the length and method of bracing used for the wall above in accordance with Tables R602.10.3(1) and R602.10.3(3), and the applicable adjustment factors in Table R602.10.3(2) or R602.10.3(4), respectively, except that the length of cripple wall bracing shall be multiplied by a factor of 1.15. The distance between adjacent edges of braced wall panels shall be reduced from 20 feet (6096 mm) to 14 feet (4267 mm).

R602.10.11.1 Cripple wall bracing for Seismic Design Categories D_0 and D_1 and townhouses in Seismic Design Category C. In addition to the requirements in Section R602.10.11, the distance between adjacent edges of braced wall panels for cripple walls along a braced wall line shall be 14 feet (4267 mm) maximum.

Where braced wall lines at interior walls are not supported on a continuous foundation below, the adjacent parallel cripple walls, where provided, shall be braced with Method WSP or Method CS-WSP in accordance with Section R602.10.4. The length of bracing required in accordance with Table R602.10.3(3) for the cripple walls shall be multiplied by 1.5. Where the cripple walls do not have sufficient length to provide the required bracing, the spacing of panel edge fasteners shall be reduced to 4 inches (102 mm) on center and the required bracing length adjusted by 0.7. If the required length can still not be provided, the cripple wall shall be designed in accordance with accepted engineering practice.

R602.10.11.2 Cripple wall bracing for Seismic Design Category D_2. In Seismic Design Category D_2, cripple walls shall be braced in accordance with Tables R602.10.3(3) and R602.10.3(4).

R602.10.11.3 Redesignation of cripple walls. Where all cripple wall segments along a braced wall line do not exceed 48 inches (1219 mm) in height, the cripple walls shall be permitted to be redesignated as a first-story wall for purposes of determining wall bracing requirements. Where any cripple wall segment in a braced wall line exceeds 48 inches (1219 mm) in height, the entire cripple wall shall be counted as an additional story. If the cripple walls are redesignated, the stories above the redesignated story shall be counted as the second and third stories, respectively.

R602.11 Wall anchorage. Braced wall line sills shall be anchored to concrete or masonry foundations in accordance with Sections R403.1.6 and R602.11.1.

R602.11.1 Wall anchorage for all buildings in Seismic Design Categories D_0, D_1 and D_2 and townhouses in Seismic Design Category C. Plate washers, a minimum of 0.229 inch by 3 inches by 3 inches (5.8 mm by 76 mm by 76 mm) in size, shall be provided between the foundation sill plate and the nut except where approved anchor straps are used. The hole in the plate washer is permitted to be diagonally slotted with a width of up to $^3/_{16}$ inch (5 mm) larger than the bolt diameter and a slot length not to exceed $1^3/_4$ inches (44 mm), provided a standard cut washer is placed between the plate washer and the nut.

R602.11.2 Stepped foundations in Seismic Design Categories D_0, D_1 and D_2. In all buildings located in Seismic Design Categories D_0, D_1 or D_2, where the height of a required braced wall line that extends from foundation to floor above varies more than 4 feet (1219 mm), the braced wall line shall be constructed in accordance with the following:

1. Where the lowest floor framing rests directly on a sill bolted to a foundation not less than 8 feet (2440 mm) in length along a line of bracing, the line shall be considered as braced. The double plate of the cripple stud wall beyond the segment of footing that extends to the lowest framed floor shall be spliced

by extending the upper top plate a minimum of 4 feet (1219 mm) along the foundation. Anchor bolts shall be located a maximum of 1 foot and 3 feet (305 and 914 mm) from the step in the foundation. See Figure R602.11.2.

2. Where cripple walls occur between the top of the foundation and the lowest floor framing, the bracing requirements of Sections R602.10.11, R602.10.11.1 and R602.10.11.2 shall apply.
3. Where only the bottom of the foundation is stepped and the lowest floor framing rests directly on a sill bolted to the foundations, the requirements of Sections R403.1.6 and R602.11.1 shall apply.

R602.12 Simplified wall bracing. Buildings meeting all of the conditions listed in items 1-8 shall be permitted to be braced in accordance with this section as an alternative to the requirements of Section R602.10. The entire building shall be braced in accordance with this section; the use of other bracing provisions of R602.10, except as specified herein, shall not be permitted.

1. There shall be no more than two stories above the top of a concrete or masonry foundation or basement wall. Permanent wood foundations shall not be permitted.
2. Floors shall not cantilever more than 24 inches (607 mm) beyond the foundation or bearing wall below.
3. Wall height shall not be greater than 10 feet (2743 mm).
4. The building shall have a roof eave-to-ridge height of 15 feet (4572 mm) or less.
5. All exterior walls shall have gypsum board with a minimum thickness of $^1/_2$ inch (12.7 mm) installed on the interior side fastened in accordance with Table R702.3.5.
6. The structure shall be located where the basic wind speed is less than or equal to 90 mph (40 m/s), and the Exposure Category is A or B.
7. The structure shall be located in Seismic Design Category A, B or C for detached one- and two-family dwellings or Seismic Design Category A or B for townhouses.
8. Cripple walls shall not be permitted in two-story buildings.

R602.12.1 Circumscribed rectangle. The bracing required for each building shall be determined by circumscribing a rectangle around the entire building on each floor as shown in Figure R602.12.1. The rectangle shall surround all enclosed offsets and projections such as sunrooms and attached garages. Open structures, such as carports and decks, shall be permitted to be excluded. The rectangle shall have no side greater than 60 feet (18 288 mm), and the ratio between the long side and short side shall be a maximum of 3:1.

R602.12.2 Sheathing materials. The following sheathing materials installed on the exterior side of exterior walls shall be used to construct a bracing unit as defined in Section R602.12.3. Mixing materials is prohibited.

1. Wood structural panels with a minimum thickness of $^3/_8$ inch (9.5 mm) fastened in accordance with Table R602.3(3).
2. Structural fiberboard sheathing with a minimum thickness of $^1/_2$ inch (12.7 mm) fastened in accordance with Table R602.3(1).

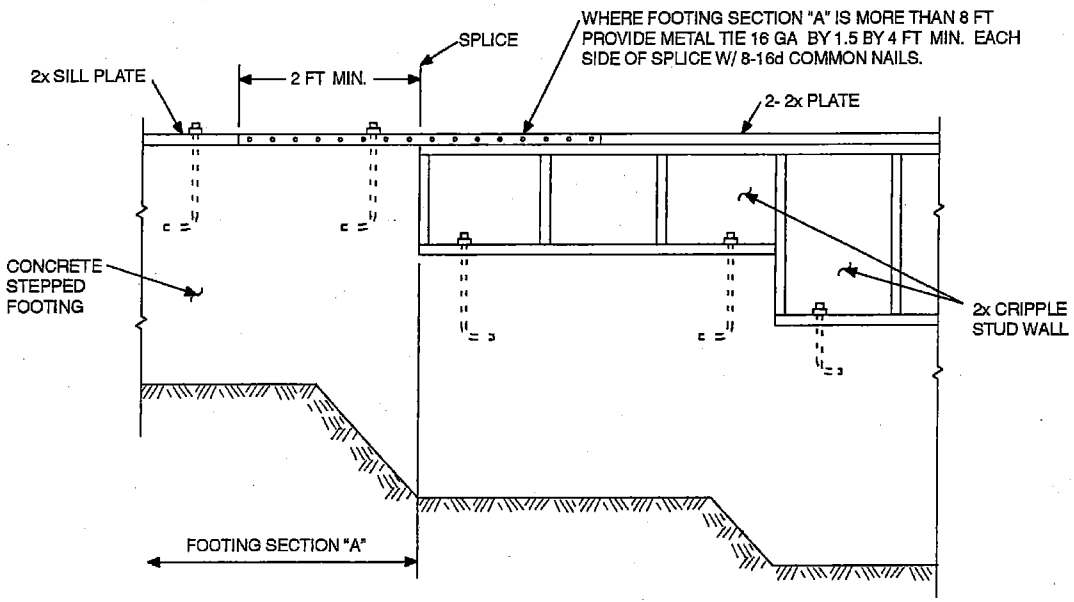

For SI: 1 inch = 25.4 mm, 1 foot = 304.8 mm.

Note: Where footing Section "A" is less than 8 feet long in a 25-foot-long wall, install bracing at cripple stud wall.

FIGURE R602.11.2
STEPPED FOUNDATION CONSTRUCTION

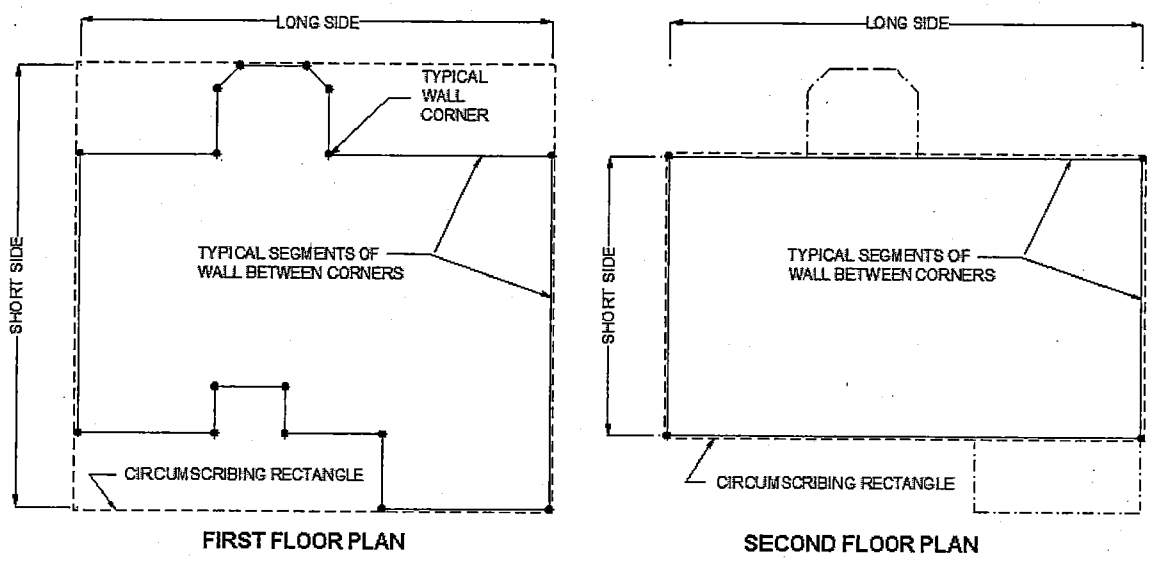

FIGURE R602.12.1
RECTANGLE CIRCUMSCRIBING AN ENCLOSED BUILDING

R602.12.3 Bracing unit. A bracing unit shall be a full-height sheathed segment of the exterior wall with no openings or vertical or horizontal offsets and a minimum length as specified herein. Interior walls shall not contribute toward the amount of required bracing. Mixing of Items 1 and 2 is prohibited on the same story.

1. Where all framed portions of all exterior walls are sheathed in accordance with Section R602.12.2, including wall areas between bracing units, above and below openings and on gable end walls, the minimum length of a bracing unit shall be 3 feet (914 mm).
2. Where the exterior walls are braced with sheathing panels in accordance with Section R602.12.2 and areas between bracing units are covered with other materials, the minimum length of a bracing unit shall be 4 feet (1219 mm).

R602.12.3.1 Multiple bracing units. Segments of wall compliant with Section R602.12.3 and longer than the minimum bracing unit length shall be considered as multiple bracing units. The number of bracing units shall be determined by dividing the wall segment length by the minimum bracing unit length. Full-height sheathed segments of wall narrower than the minimum bracing unit length shall not contribute toward a bracing unit except as specified in Section R602.12.6.

R602.12.4 Number of bracing units. Each side of the circumscribed rectangle, as shown in Figure R602.12.1, shall have, at a minimum, the number of bracing units in accordance with Table R602.12.4 placed on the parallel exterior walls facing the side of the rectangle. Bracing units shall then be placed using the distribution requirements specified in Section R602.12.5.

R602.12.5 Distribution of bracing units. The placement of bracing units on exterior walls shall meet all of the following requirements as shown in Figure R602.12.5.

1. A bracing unit shall begin no more than 12 feet (3658 mm) from any wall corner.
2. The distance between adjacent edges of bracing units shall be no greater than 20 feet (6096 mm).
3. Segments of wall greater than 8 feet (2438 mm) in length shall have a minimum of one bracing unit.

R602.12.6 Narrow panels. The bracing methods referenced in Section R602.10 and specified in Sections R602.12.6.1 through R602.12.6.3 shall be permitted when using simplified wall bracing.

R602.12.6.1 Method CS-G. Braced wall panels constructed as Method CS-G in accordance with Tables R602.10.4 and R602.10.5 shall be permitted for one-story garages when all framed portions of all exterior walls are sheathed with wood structural panels. Each CS-G panel shall be equivalent to 0.5 of a bracing unit. Segments of wall which include a Method CS-G panel shall meet the requirements of Section R602.10.4.2.

R602.12.6.2 Method CS-PF. Braced wall panels constructed as Method CS-PF in accordance with Section R602.10.6.4 shall be permitted when all framed portions of all exterior walls are sheathed with wood structural panels. Each CS-PF panel shall equal 0.5 bracing units. A maximum of four CS-PF panels shall be permitted on all segments of walls parallel to each side of the circumscribed rectangle. Segments of wall which include a Method CS-PF panel shall meet the requirements of Section R602.10.4.2.

TABLE R602.12.4
MINIMUM NUMBER OF BRACING UNITS ON EACH SIDE OF THE CIRCUMSCRIBED RECTANGLE

STORY LEVEL	EAVE-TO-RIDGE HEIGHT (feet)	MINIMUM NUMBER OF BRACING UNITS ON EACH LONG SIDE[a, b]						MINIMUM NUMBER OF BRACING UNITS ON EACH SHORT SIDE[a, b]					
		Length of short side (feet)[c]						Length of long side (feet)[c]					
		10	20	30	40	50	60	10	20	30	40	50	60
	10	1	2	2	2	3	3	1	2	2	2	3	3
		2	3	3	4	5	6	2	3	3	4	5	6
	15	1	2	3	3	4	4	1	2	3	3	4	4
		2	3	4	5	6	7	2	3	4	5	6	7

For SI: 1 inch = 25.4 mm, 1 foot = 304.8 mm.

a. Interpolation shall not be permitted.

b. Cripple walls or wood-framed basement walls in a walk-out condition of a one-story structure shall be designed as the first floor of a two-story house.

c. Actual lengths of the sides of the circumscribed rectangle shall be rounded to the next highest unit of 10 when using this table.

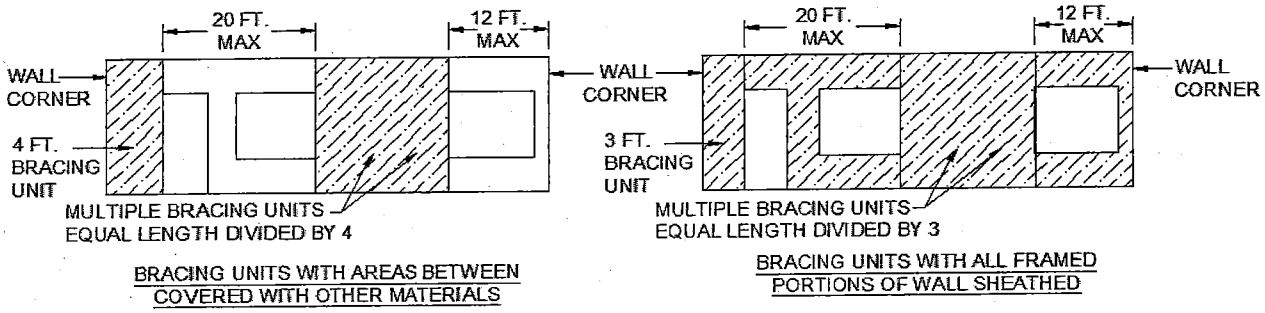

For SI: 1 foot = 304.8 mm.

FIGURE R602.12.5
BRACING UNIT DISTRIBUTION

R602.12.6.3 Methods PFH and PFG. Braced wall panels constructed as Method PFH and PFG shall be permitted when bracing units are constructed using wood structural panels. Each PFH panel shall equal one bracing unit and each PFG panel shall be equal to 0.75 bracing units.

R602.12.7 Lateral support. For bracing units located along the eaves, the vertical distance from the outside edge of the top wall plate to the roof sheathing above shall not exceed 9.25 inches (235 mm) at the location of a bracing unit unless lateral support is provided in accordance with Section R602.10.8.2.

R602.12.8 Stem walls. Masonry stem walls with a height and length of 48 inches (1219 mm) or less supporting a bracing unit or a Method CS-G, CS-PF or PFG braced wall panel shall be constructed in accordance with Figure R602.10.9. Concrete stem walls with a length of 48 inches (1219 mm) or less, greater than 12 inches (305 mm) tall and less than 6 inches (152 mm) thick shall be reinforced sized and located in accordance with Figure R602.10.9.

SECTION R603
STEEL WALL FRAMING

R603.1 General. Elements shall be straight and free of any defects that would significantly affect structural performance. Cold-formed steel wall framing members shall comply with the requirements of this section.

R603.1.1 Applicability limits. The provisions of this section shall control the construction of exterior cold-formed steel wall framing and interior load-bearing cold-formed steel wall framing for buildings not more than 60 feet (18 288 mm) long perpendicular to the joist or truss span, not more than 40 feet (12 192 mm) wide parallel to the joist or truss span, and less than or equal to three stories above grade plane. All exterior walls installed in accordance with

the provisions of this section shall be considered as load-bearing walls. Cold-formed steel walls constructed in accordance with the provisions of this section shall be limited to sites subjected to a maximum design wind speed of 110 miles per hour (49 m/s) Exposure B or C and a maximum ground snow load of 70 pounds per square foot (3.35 kPa).

R603.1.2 In-line framing. Load-bearing cold-formed steel studs constructed in accordance with Section R603 shall be located in-line with joists, trusses and rafters in accordance with Figure R603.1.2 and the tolerances specified as follows:

1. The maximum tolerance shall be $^3/_4$ inch (19 mm) between the centerline of the horizontal framing member and the centerline of the vertical framing member.
2. Where the centerline of the horizontal framing member and bearing stiffener are located to one side of the centerline of the vertical framing member, the maximum tolerance shall be $^1/_8$ inch (3 mm) between the web of the horizontal framing member and the edge of the vertical framing member.

R603.2 Structural framing. Load-bearing cold-formed steel wall framing members shall comply with Figure R603.2(1) and with the dimensional and minimum thickness requirements specified in Tables R603.2(1) and R603.2(2). Tracks shall comply with Figure R603.2(2) and shall have a minimum flange width of $1^1/_4$ inches (32 mm).

R603.2.1 Material. Load-bearing cold-formed steel framing members shall be cold-formed to shape from structural quality sheet steel complying with the requirements of one of the following:

1. ASTM A 653: Grades 33 and 50 (Class 1 and 3).
2. ASTM A 792: Grades 33 and 50A.
3. ASTM A 1003: Structural Grades 33 Type H, and 50 Type H.

R603.2.2 Identification. Load-bearing cold-formed steel framing members shall have a legible label, stencil, stamp or embossment with the following information as a minimum:

1. Manufacturer's identification.
2. Minimum base steel thickness in inches (mm).
3. Minimum coating designation.
4. Minimum yield strength, in kips per square inch (ksi) (MPa).

R603.2.3 Corrosion protection. Load-bearing cold-formed steel framing shall have a metallic coating complying with ASTM A 1003 and one of the following:

1. A minimum of G 60 in accordance with ASTM A 653.
2. A minimum of AZ 50 in accordance with ASTM A 792.

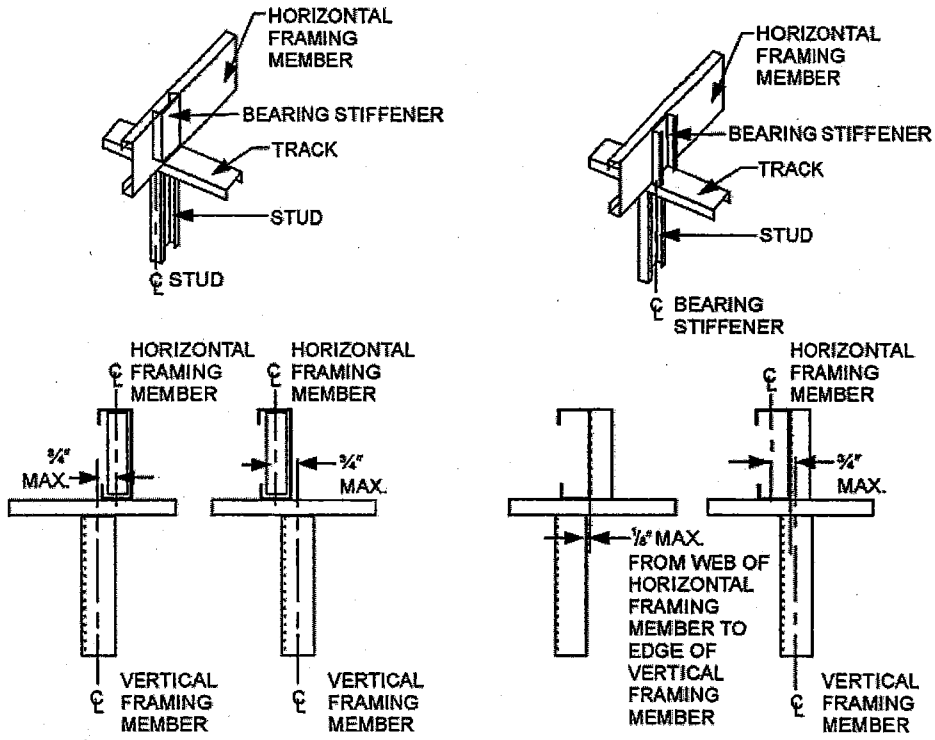

For SI: 1 inch = 25.4 mm,

FIGURE R603.1.2
IN-LINE FRAMING

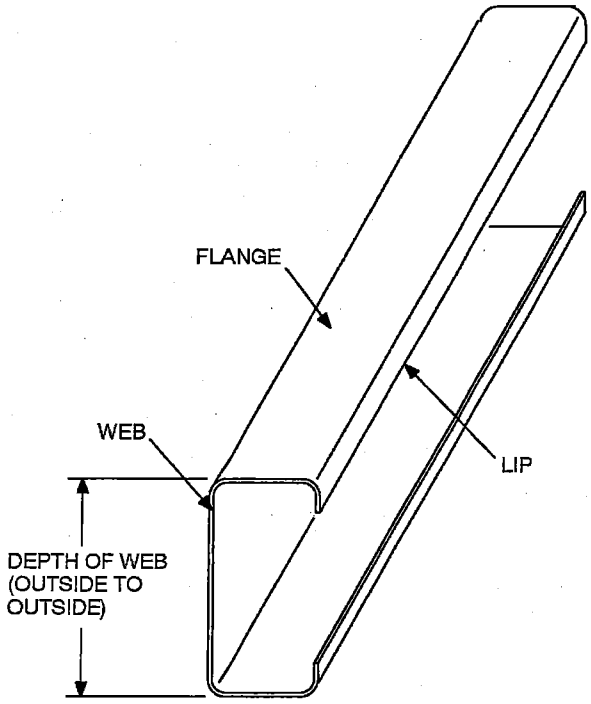

FIGURE R603.2(1)
C-SHAPED SECTION

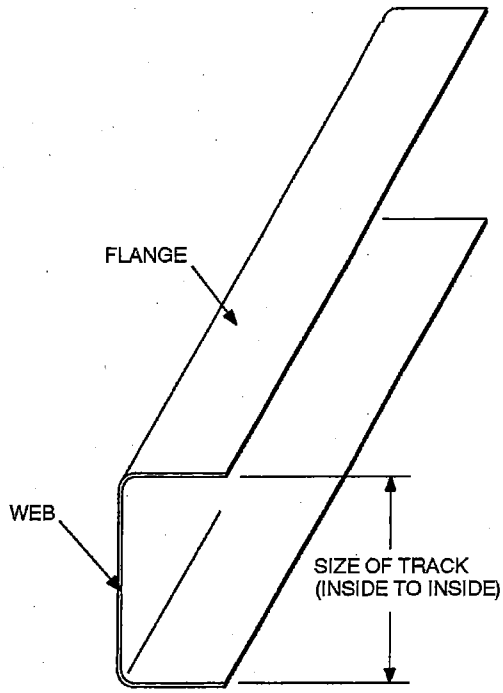

FIGURE R603.2(2)
TRACK SECTION

TABLE R603.2(1)
LOAD-BEARING COLD-FORMED STEEL STUD SIZES

MEMBER DESIGNATION[a]	WEB DEPTH (inches)	MINIMUM FLANGE WIDTH (inches)	MAXIMUM FLANGE WIDTH (inches)	MINIMUM LIP SIZE (inch)
350S162-t	3.5	1.625	2	0.5
550S162-t	5.5	1.625	2	0.5

For SI: 1 inch = 25.4 mm; 1 mil = 0.0254 mm.

a. The member designation is defined by the first number representing the member depth in hundredths of an inch "S" representing a stud or joist member, the second number representing the flange width in hundredths of an inch, and the letter "t" shall be a number representing the minimum base metal thickness in mils [See Table R603.2(2)].

TABLE R603.2(2)
MINIMUM THICKNESS OF COLD-FORMED STEEL MEMBERS

DESIGNATION THICKNESS (mils)	MINIMUM BASE STEEL THICKNESS (inch)
33	0.0329
43	0.0428
54	0.0538
68	0.0677
97	0.0966

For SI: 1 mil = 0.0254 mm, 1 inch = 25.4 mm.

R603.2.4 Fastening requirements. Screws for steel-to-steel connections shall be installed with a minimum edge distance and center-to-center spacing of $^1/_2$ inch (12.7 mm), shall be self-drilling tapping and shall conform to ASTM C 1513. Structural sheathing shall be attached to cold-formed steel studs with minimum No. 8 self-drilling tapping screws that conform to ASTM C 1513. Screws for attaching structural sheathing to cold-formed steel wall framing shall have a minimum head diameter of 0.292 inch (7.4 mm) with countersunk heads and shall be installed with a minimum edge distance of $^3/_8$ inch (9.5 mm). Gypsum board shall be attached to cold-formed steel wall framing with minimum No. 6 screws conforming to ASTM C 954 or ASTM C 1513 with a bugle head style and shall be installed in accordance with Section R702. For all connections, screws shall extend through the steel a minimum of three exposed threads. All fasteners shall have rust inhibitive coating suitable for the installation in which they are being used, or be manufactured from material not susceptible to corrosion.

Where No. 8 screws are specified in a steel-to-steel connection, the required number of screws in the connection is permitted to be reduced in accordance with the reduction factors in Table R603.2.4, when larger screws are used or when one of the sheets of steel being connected is thicker than 33 mils (0.84 mm). When applying the reduction factor, the resulting number of screws shall be rounded up.

TABLE R603.2.4
SCREW SUBSTITUTION FACTOR

SCREW SIZE	THINNEST CONNECTED STEEL SHEET (mils)	
	33	43
#8	1.0	0.67
#10	0.93	0.62
#12	0.86	0.56

For SI: 1 mil = 0.0254 mm.

R603.2.5 Web holes, web hole reinforcing and web hole patching. Web holes, web hole reinforcing and web hole patching shall be in accordance with this section.

R603.2.5.1 Web holes. Web holes in wall studs and other structural members shall comply with all of the following conditions:

1. Holes shall conform to Figure R603.2.5.1;
2. Holes shall be permitted only along the centerline of the web of the framing member;
3. Holes shall have a center-to-center spacing of not less than 24 inches (610 mm);
4. Holes shall have a web hole width not greater than 0.5 times the member depth, or $1^1/_2$ inches (38 mm);
5. Holes shall have a web hole length not exceeding $4^1/_2$ inches (114 mm); and
6. Holes shall have a minimum distance between the edge of the bearing surface and the edge of the web hole of not less than 10 inches (254 mm).

Framing members with web holes not conforming to the above requirements shall be reinforced in accordance with Section R603.2.5.2, patched in accordance with Section R603.2.5.3 or designed in accordance with accepted engineering practice.

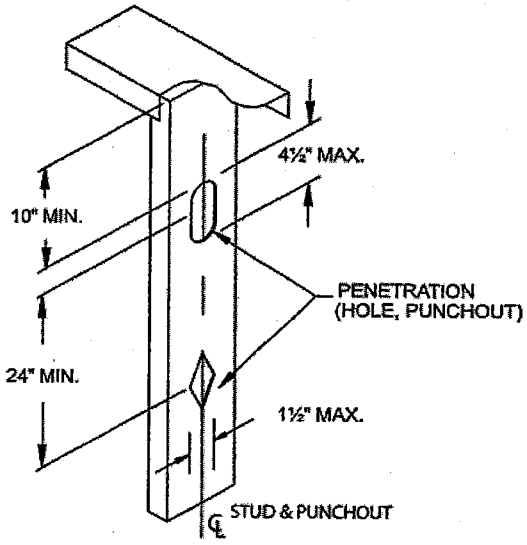

For SI: 1 inch = 25.4 mm.

FIGURE R603.2.5.1
WEB HOLES

R603.2.5.2 Web hole reinforcing. Web holes in gable endwall studs not conforming to the requirements of Section R603.2.5.1 shall be permitted to be reinforced if the hole is located fully within the center 40 percent of the span and the depth and length of the hole does not exceed 65 percent of the flat width of the web. The reinforcing shall be a steel plate or C-shape section with a hole that does not exceed the web hole size limitations of Section R603.2.5.1 for the member being reinforced. The steel reinforcing shall be the same thickness as the receiving member and shall extend at least 1 inch (25.4 mm) beyond all edges of the hole. The steel reinforcing shall be fastened to the web of the receiving member with No.8 screws spaced no more than 1 inch (25.4 mm) center-to-center along the edges of the patch with minimum edge distance of $^1/_2$ inch (12.7 mm).

R603.2.5.3 Hole patching. Web holes in wall studs and other structural members not conforming to the requirements in Section R603.2.5.1 shall be permitted to be patched in accordance with either of the following methods:

1. Framing members shall be replaced or designed in accordance with accepted engineering practice when web holes exceed the following size limits:
   1.1. The depth of the hole, measured across the web, exceeds 70 percent of the flat width of the web; or
   1.2. The length of the hole measured along the web exceeds 10 inches (254 mm) or the depth of the web, whichever is greater.

2. Web holes not exceeding the dimensional requirements in Section R603.2.5.3, Item 1 shall be patched with a solid steel plate, stud section or track section in accordance with Figure R603.2.5.3. The steel patch shall, as a minimum, be the same thickness as the receiving member and shall extend at least 1 inch (25.4 mm) beyond all edges of the hole. The steel patch shall be fastened to the web of the receiving member with No. 8 screws spaced no more than 1 inch (25.4 mm) center-to-center along the edges of the patch with a minimum edge distance of $^1/_2$ inch (12.7 mm).

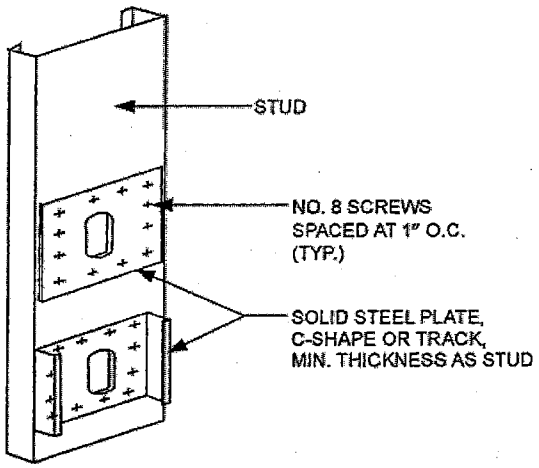

For SI: 1 inch = 25.4 mm.

FIGURE R603.2.5.3
STUD WEB HOLE PATCH

R603.3 Wall construction. All exterior cold-formed steel framed walls and interior load-bearing cold-formed steel framed walls shall be constructed in accordance with the provisions of this section.

R603.3.1 Wall to foundation or floor connection. Cold-formed steel framed walls shall be anchored to foundations or floors in accordance with Table R603.3.1 and Figure R603.3.1(1), R603.3.1(2) or R603.3.1(3). Anchor bolts shall be located not more than 12 inches (305 mm) from corners or the termination of bottom tracks. Anchor bolts shall extend a minimum of 15 inches (381 mm) into masonry or 7 inches (178 mm) into concrete. Foundation anchor straps shall be permitted, in lieu of anchor bolts, if spaced as required to provide equivalent anchorage to the required anchor bolts and installed in accordance with manufacturer's requirements.

R603.3.1.1 Gable endwalls. Gable endwalls with heights greater than 10 feet (3048 mm) shall be anchored to foundations or floors in accordance with Tables R603.3.1.1(1) or R603.3.1.1(2).

R603.3.2 Minimum stud sizes. Cold-formed steel walls shall be constructed in accordance with Figure R603.3.1(1), R603.3.1(2) or R603.3.1(3), as applicable. Exterior wall stud size and thickness shall be determined in accordance with the limits set forth in Tables R603.3.2(2) through R603.3.2(31). Interior load-bearing wall stud size and thickness shall be determined in accordance with the limits set forth in Tables R603.3.2(2) through R603.3.2(31) based upon an 85 miles per hour (38 m/s) Exposure A/B wind value and the building width, stud spacing and snow load, as appropriate. Fastening requirements shall be in accordance with Section R603.2.4 and Table R603.3.2(1). Top and bottom tracks shall have the same minimum thickness as the wall studs.

Exterior wall studs shall be permitted to be reduced to the next thinner size, as shown in Tables R603.3.2(2) through R603.3.2(31), but not less than 33 mils (0.84 mm), where both of the following conditions exist:

1. Minimum of $^1/_2$ inch (12.7 mm) gypsum board is installed and fastened in accordance with Section R702 on the interior surface.
2. Wood structural sheathing panels of minimum $^7/_{16}$-inch-thick (11 mm) oriented strand board or $^{15}/_{32}$-inch-thick (12 mm) plywood is installed and fastened in accordance with Section R603.9.1 and Table R603.3.2(1) on the outside surface.

Interior load-bearing walls shall be permitted to be reduced to the next thinner size, as shown in Tables R603.3.2(2) through R603.3.2(31), but not less than 33 mils (0.84 mm), where a minimum of $^1/_2$-inch (12.7 mm) gypsum board is installed and fastened in accordance with Section R702 on both sides of the wall. The tabulated stud thickness for load- bearing walls shall be used when the attic load is 10 pounds per square feet (480 Pa) or less. A limited attic storage load of 20 pounds per square feet (960 Pa) shall be permitted provided that the next higher snow load column is used to select the stud size from Tables R603.3.2(2) through R603.3.2(31).

For two-story buildings, the tabulated stud thickness for walls supporting one floor, roof and ceiling shall be used when second floor live load is 30 pounds per square feet (1440 Pa). Second floor live loads of 40 psf (1920 pounds per square feet) shall be permitted provided that the next higher snow load column is used to select the stud size from Tables R603.3.2(2) through R603.3.2(21).

For three-story buildings, the tabulated stud thickness for walls supporting one or two floors, roof and ceiling shall be used when the third floor live load is 30 pounds per square feet (1440 Pa). Third floor live loads of 40 pounds per square feet (1920 Pa) shall be permitted provided that the next higher snow load column is used to select the stud size from Tables R603.3.2(22) through R603.3.2(31).

R603.3.2.1 Gable endwalls. The size and thickness of gable endwall studs with heights less than or equal to 10 feet (3048 mm) shall be permitted in accordance with the limits set forth in Table R603.3.2.1(1) or R603.3.2.1(2). The size and thickness of gable endwall studs with heights greater than 10 feet (3048 mm) shall be determined in accordance with the limits set forth in Table R603.3.2.1(3) or R603.3.2.1(4).

TABLE R603.3.1
WALL TO FOUNDATION OR FLOOR CONNECTION REQUIREMENTS[a, b]

FRAMING CONDITION	WIND SPEED (MPH) AND EXPOSURE					
	85 B	90 B	100 B 85 C	110 B 90 C	100 C	< 110 C
Wall bottom track to floor per Figure R603.3.1(1)	1-No. 8 screw at 12″ o.c.	1-No. 8 screw at 12″ o.c.	1-No. 8 screw at 12″ o.c.	1-No. 8 screw at 12″ o.c.	2-No. 8 screws at 12″ o.c.	2 No. 8 screws at 12″ o.c.
Wall bottom track to foundation per Figure R603.3.1(2)[d]	$^1/_2$″ minimum diameter anchor bolt at 6″ o.c.	$^1/_2$″ minimum diameter anchor bolt at 6″ o.c.	$^1/_2$″ minimum diameter anchor bolt at 4″ o.c.	$^1/_2$″ minimum diameter anchor bolt at 4″ o.c.	$^1/_2$″ minimum diameter anchor bolt at 4″ o.c.	$^1/_2$″ minimum diameter anchor bolt at 4″ o.c.
Wall bottom track to wood sill per Figure R603.3.1(3)	Steel plate spaced at 4″ o.c., with 4-No. 8 screws and 4-10d or 6-8d common nails	Steel plate spaced at 4″ o.c., with 4-No. 8 screws and 4-10d or 6-8d common nails	Steel plate spaced at 3″ o.c., with 4-No. 8 screws and 4-10d or 6-8d common nails	Steel plate spaced at 3″ o.c., with 4-No. 8 screws and 4-10d or 6-8d common nails	Steel plate spaced at 2″ o.c., with 4-No. 8 screws and 4-10d or 6-8d common nails	Steel plate spaced at 2″ o.c., with 4-No. 8 screws and 4-10d or 6-8d common nails
Wind uplift connector strength to 16″ stud spacing[c]	NR	NR	NR	NR	NR	65 lb per foot of wall length
Wind uplift connector strength for 24″ stud spacing[c]	NR	NR	NR	NR	NR	100 lb per foot of wall length

For SI: 1 inch = 25.4 mm, 1 mile per hour = 0.447 m/s, 1 foot = 304.8 mm, 1 pound = 4.45 N.

a. Anchor bolts are to be located not more than 12 inches from corners or the termination of bottom tracks (e.g., at door openings or corners). Bolts are to extend a minimum of 15 inches into masonry or 7 inches into concrete.

b. All screw sizes shown are minimum.

c. NR = uplift connector not required.

d. Foundation anchor straps are permitted in place of anchor bolts, if spaced as required to provide equivalent anchorage to the required anchor bolts and installed in accordance with manufacturer's requirements.

TABLE R603.3.1.1(1)
GABLE ENDWALL TO FLOOR CONNECTION REQUIREMENTS[a, b, c]

BASIC WIND SPEED (mph)		WALL BOTTOM TRACK TO FLOOR JOIST OR TRACK CONNECTION		
Exposure		Stud height, *h* (feet)		
B	C	10 < *h* ≤ 14	14 < *h* ≤ 18	18 < *h* ≤ 22
85	—	1-No. 8 screw @ 12″ o.c.	1-No. 8 screw @ 12″ o.c.	1-No. 8 screw @ 12″ o.c.
90	—	1-No. 8 screw @ 12″ o.c.	1-No. 8 screw @ 12″ o.c.	1-No. 8 screw @ 12″ o.c.
100	85	1-No. 8 screw @ 12″ o.c.	1-No. 8 screw @ 12″ o.c.	1-No. 8 screw @ 12″ o.c.
110	90	1-No. 8 screw @ 12″ o.c.	1-No. 8 screw @ 12″ o.c.	2-No. 8 screws @ 12″ o.c.
—	100	1-No. 8 screw @ 12″ o.c.	2-No. 8 screws @ 12″ o.c.	1-No. 8 screw @ 8″ o.c.
—	110	2-No. 8 screws @ 12″ o.c.	1-No. 8 screw @ 8″ o.c.	2-No. 8 screws @ 8″ o.c.

For SI: 1 inch = 25.4 mm, 1 mile per hour = 0.447 m/s, 1 foot = 304.8 mm.

a. Refer to Table R603.3.1.1(2) for gable endwall bottom track to foundation connections.

b. Where attachment is not given, special design is required.

c. Stud height, *h*, is measured from wall bottom track to wall top track or brace connection height.

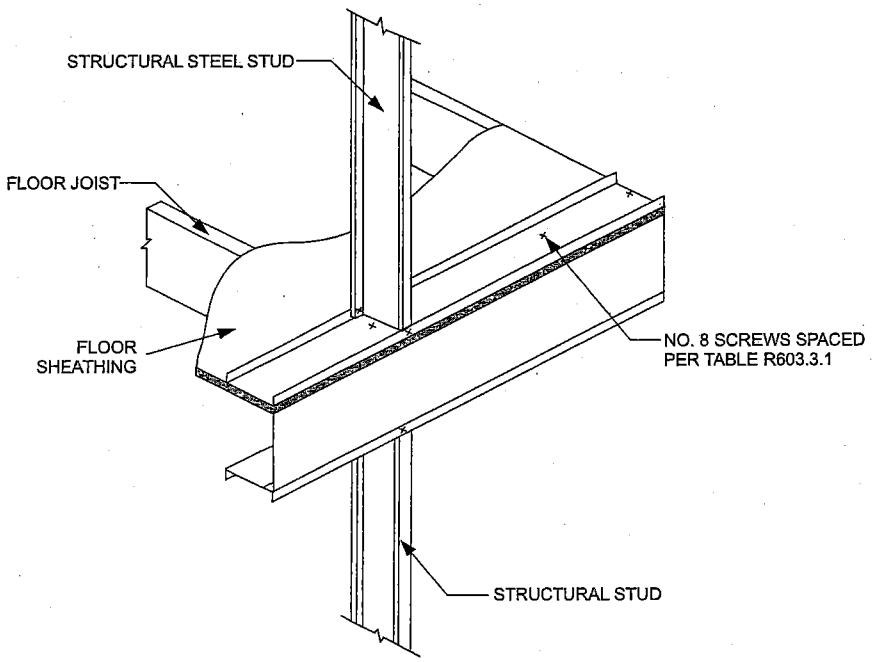

FIGURE R603.3.1(1)
WALL TO FLOOR CONNECTION

TABLE R603.3.1.1(2)
GABLE ENDWALL BOTTOM TRACK TO FOUNDATION CONNECTION REQUIREMENTS[a, b, c]

BASIC WIND SPEED (mph)		MINIMUM SPACING FOR 1/2-INCH-DIAMETER ANCHOR BOLTS[d]		
Exposure		Stud height, *h* (feet)		
B	C	$10 < h \leq 14$	$14 < h \leq 18$	$18 < h \leq 22$
85	—	6′- 0″ o.c.	6′- 0″ o.c.	6′- 0″ o.c.
90	—	6′- 0″ o.c.	5′- 7″ o.c.	6′- 0″ o.c.
100	85	5′- 10″ o.c.	6′- 0″ o.c.	6′- 0″ o.c.
110	90	4′- 10″ o.c.	5′- 6″ o.c.	6′- 0″ o.c.
—	100	4′- 1″ o.c.	6′- 0″ o.c.	6′- 0″ o.c.
—	110	5′- 1″ o.c.	6′- 0″ o.c.	5′- 2″ o.c.

For SI: 1 inch = 25.4 mm, 1 mile per hour = 0.447 m/s, 1 foot = 304.8 mm.

a. Refer to Table R603.3.1.1(1) for gable endwall bottom track to floor joist or track connection connections.

b. Where attachment is not given, special design is required.

c. Stud height, *h*, is measured from wall bottom track to wall top track or brace connection height.

d. Foundation anchor straps are permitted in place of anchor bolts if spaced as required to provide equivalent anchorage to the required anchor bolts and installed in accordance with manufacturer's requirements.

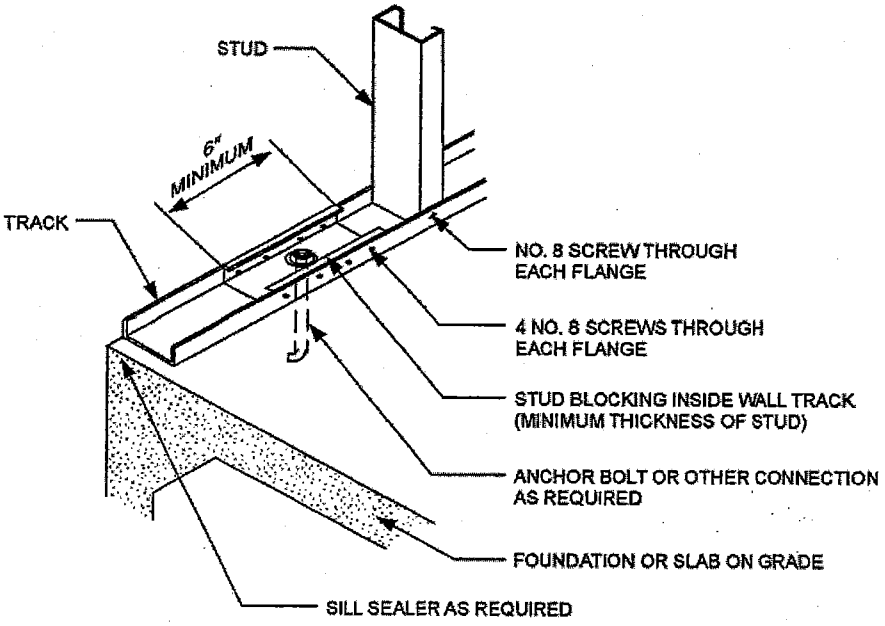

For SI: 1 inch = 25.4 mm.

FIGURE R603.3.1(2)
WALL TO FOUNDATION CONNECTION

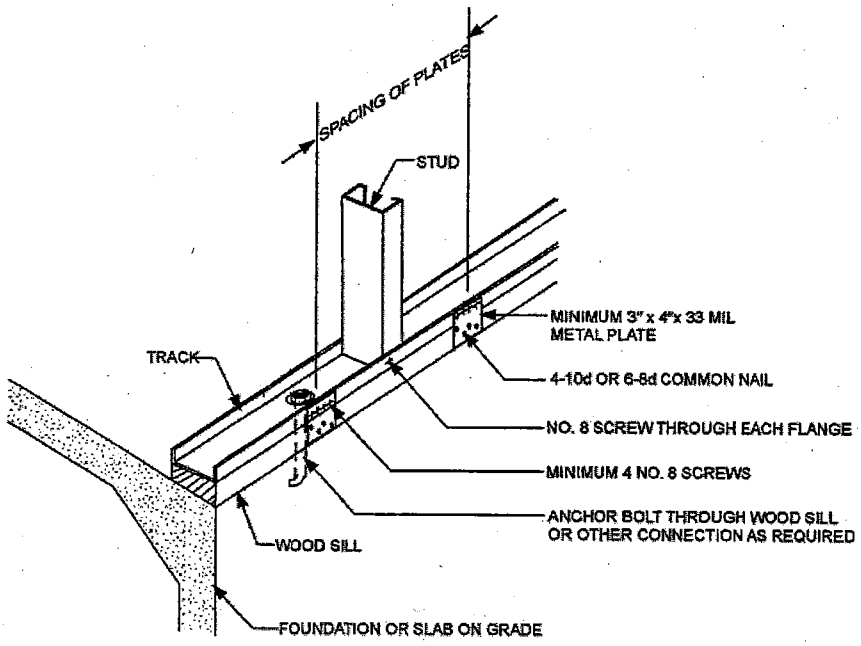

For SI: 1 mil = 0.0254 mm, 1 inch = 25.4 mm.

FIGURE R603.3.1(3)
WALL TO WOOD SILL CONNECTION

R603.3.3 Stud bracing. The flanges of cold-formed steel studs shall be laterally braced in accordance with one of the following:

1. Gypsum board on both sides, structural sheathing on both sides, or gypsum board on one side and structural sheathing on the other side of load-bearing walls with gypsum board installed with minimum No. 6 screws in accordance with Section R702 and structural sheathing installed in accordance with Section R603.9.1 and Table R603.3.2(1).
2. Horizontal steel straps fastened in accordance with Figure R603.3.3(1) on both sides at mid-height for 8-foot (2438 mm) walls, and at one-third points for 9-foot and 10-foot (2743 mm and 3048 mm) walls. Horizontal steel straps shall be at least 1.5 inches in width and 33 mils in thickness (38 mm by 0.84 mm). Straps shall be attached to the flanges of studs with one No. 8 screw. In-line blocking shall be installed between studs at the termination of all straps and at 12 foot (3658 mm) intervals along the strap. Straps shall be fastened to the blocking with two No. 8 screws.
3. Sheathing on one side and strapping on the other side fastened in accordance with Figure R603.3.3(2). Sheathing shall be installed in accordance with Item 1. Steel straps shall be installed in accordance with Item 2.

R603.3.4 Cutting and notching. Flanges and lips of cold-formed steel studs and headers shall not be cut or notched.

R603.3.5 Splicing. Steel studs and other structural members shall not be spliced. Tracks shall be spliced in accordance with Figure R603.3.5.

R603.4 Corner framing. In exterior walls, corner studs and the top tracks shall be installed in accordance with Figure R603.4.

R603.5 Exterior wall covering. The method of attachment of exterior wall covering materials to cold-formed steel stud wall framing shall conform to the manufacturer's installation instructions.

R603.6 Headers. Headers shall be installed above all wall openings in exterior walls and interior load-bearing walls. Box beam headers and back-to-back headers each shall be formed from two equal sized C-shaped members in accordance with Figures R603.6(1) and R603.6(2), respectively, and Tables R603.6(1) through R603.6(24). L-shaped headers shall be permitted to be constructed in accordance with AISI S230. Alternately, headers shall be permitted to be designed and constructed in accordance with AISI S100, Section D4.

R603.6.1 Headers in gable endwalls. Box beam and back-to-back headers in gable endwalls shall be permitted to be constructed in accordance with Section R603.6 or with the header directly above the opening in accordance with Figures R603.6.1(1) and R603.6.1(2) and the following provisions:

1. Two 362S162-33 for openings less than or equal to 4 feet (1219 mm).
2. Two 600S162-43 for openings greater than 4 feet (1219 mm) but less than or equal to 6 feet (1830 mm).
3. Two 800S162-54 for openings greater than 6 feet (1829 mm) but less than or equal to 9 feet (2743 mm).

R603.7 Jack and king studs. The number of jack and king studs installed on each side of a header shall comply with Table R603.7(1). King, jack and cripple studs shall be of the same dimension and thickness as the adjacent wall studs. Headers shall be connected to king studs in accordance with Table R603.7(2) and the following provisions:

1. For box beam headers, one-half of the total number of required screws shall be applied to the header and one half to the king stud by use of C-shaped or track member in accordance with Figure R603.6(1). The track or C-shape sections shall extend the depth of the header minus $^1/_2$ inch (12.7 mm) and shall have a minimum thickness not less than that of the wall studs.
2. For back-to-back headers, one-half the total number of screws shall be applied to the header and one-half to the king stud by use of a minimum 2-inch by 2-inch (51 mm by 51 mm) clip angle in accordance with Figure R603.6(2). The clip angle shall extend the depth of the header minus $^1/_2$ inch (12.7 mm) and shall have a minimum thickness not less than that of the wall studs. Jack and king studs shall be interconnected with structural sheathing in accordance with Figures R603.6(1) and R603.6(2).

R603.8 Head and sill track. Head track spans above door and window openings and sill track spans beneath window openings shall comply with Table R603.8. For openings less than 4 feet (1219 mm) in height that have both a head track and a sill track, multiplying the spans by 1.75 shall be permitted in Table R603.8. For openings less than or equal to 6 feet (1829 mm) in height that have both a head track and a sill track, multiplying the spans in Table R603.8 by 1.50 shall be permitted.

TABLE R603.3.2(1)
WALL FASTENING SCHEDULE[a]

DESCRIPTION OF BUILDING ELEMENT	NUMBER AND SIZE OF FASTENERS[a]	SPACING OF FASTENERS
Floor joist to track of load-bearing wall	2-No. 8 screws	Each joist
Wall stud to top or bottom track	2-No. 8 screws	Each end of stud, one per flange
Structural sheathing to wall studs	No. 8 screws[b]	6″ o.c. on edges and 12″ o.c. at intermediate supports
Roof framing to wall	Approved design or tie down in accordance with Section R802.11.	

For SI: 1 inch = 25.4 mm.

a. All screw sizes shown are minimum.

b. Screws for attachment of structural sheathing panels are to be bugle-head, flat-head, or similar head styles with a minimum head diameter of 0.29 inch.

TABLE R603.3.2(2)
24-FOOT-WIDE BUILDING SUPPORTING ROOF AND CEILING ONLY[a, b, c]
33 KSI STEEL



WIND SPEED		MEMBER SIZE	STUD SPACING (inches)	MINIMUM STUD THICKNESS (mils)											
				8-foot Studs				9-foot Studs				10-foot Studs			
Exp. B	Exp. C			Ground Snow Load (psf)											
				20	30	50	70	20	30	50	70	20	30	50	70
85 mph	—	350S162	16	33	33	33	33	33	33	33	33	33	33	33	33
			24	33	33	33	43	33	33	33	43	33	33	43	43
		550S162	16	33	33	33	33	33	33	33	33	33	33	33	33
			24	33	33	33	33	33	33	33	33	33	33	33	33
90 mph	—	350S162	16	33	33	33	33	33	33	33	33	33	33	33	33
			24	33	33	33	43	33	33	33	43	33	33	43	43
		550S162	16	33	33	33	33	33	33	33	33	33	33	33	33
			24	33	33	33	33	33	33	33	33	33	33	33	33
100 mph	85 mph	350S162	16	33	33	33	33	33	33	33	33	33	33	33	33
			24	33	33	33	43	33	33	33	43	43	43	43	43
		550S162	16	33	33	33	33	33	33	33	33	33	33	33	33
			24	33	33	33	43	33	33	33	33	33	33	33	43
110 mph	90 mph	350S162	16	33	33	33	33	33	33	33	33	33	33	33	33
			24	33	33	33	43	43	43	43	43	43	43	43	54
		550S162	16	33	33	33	33	33	33	33	33	33	33	33	33
			24	33	33	33	43	33	33	33	33	43	43	43	43
—	100 mph	350S162	16	33	33	33	33	33	33	33	33	43	43	43	43
			24	43	43	43	43	43	43	43	43	54	54	54	54
		550S162	16	33	33	33	33	33	33	33	33	33	33	33	33
			24	33	33	33	43	43	43	43	43	43	43	43	43
—	110 mph	350S162	16	33	33	33	33	43	43	43	43	43	43	43	43
			24	43	43	43	43	54	54	54	54	68	68	68	68
		550S162	16	33	33	33	33	33	33	33	33	33	33	33	33
			24	33	43	43	43	43	43	43	43	43	43	43	43

For SI: 1 inch = 25.4 mm, 1 foot = 304.8 mm, 1 mil = 0.0254 mm, 1 mile per hour = 0.447 m/s, 1 pound per square foot = 0.0479 kPa, 1 Ksi = 1,000 psi = 6.895 MPa.

a. Deflection criterion: *L*/240.

b. Design load assumptions:
Second floor dead load is 10 psf.
Second floor live load is 30 psf.
Roof/ceiling dead load is 12 psf.
Attic live load is 10 psf.

c. Building width is in the direction of horizontal framing members supported by the wall studs.

TABLE R603.3.2(3)
24-FOOT-WIDE BUILDING SUPPORTING ROOF AND CEILING ONLY[a, b, c]
50 KSI STEEL



WIND SPEED		MEMBER SIZE	STUD SPACING (inches)	MINIMUM STUD THICKNESS (mils)											
				8-foot Studs				9-foot Studs				10-foot Studs			
				Ground Snow Load (psf)											
Exp. B	Exp. C			20	30	50	70	20	30	50	70	20	30	50	70
85 mph	—	350S162	16	33	33	33	33	33	33	33	33	33	33	33	33
			24	33	33	33	43	33	33	33	33	33	33	33	43
		550S162	16	33	33	33	33	33	33	33	33	33	33	33	33
			24	33	33	33	33	33	33	33	33	33	33	33	33
90 mph	—	350S162	16	33	33	33	33	33	33	33	33	33	33	33	33
			24	33	33	33	43	33	33	33	33	33	33	33	43
		550S162	16	33	33	33	33	33	33	33	33	33	33	33	33
			24	33	33	33	33	33	33	33	33	33	33	33	33
100 mph	85 mph	350S162	16	33	33	33	33	33	33	33	33	33	33	33	33
			24	33	33	33	43	33	33	33	33	33	33	33	43
		550S162	16	33	33	33	33	33	33	33	33	33	33	33	33
			24	33	33	33	33	33	33	33	33	33	33	33	33
110 mph	90 mph	350S162	16	33	33	33	33	33	33	33	33	33	33	33	33
			24	33	33	33	43	33	33	33	43	43	43	43	43
		550S162	16	33	33	33	33	33	33	33	33	33	33	33	33
			24	33	33	33	33	33	33	33	33	33	33	33	33
—	100 mph	350S162	16	33	33	33	33	33	33	33	33	33	33	33	33
			24	33	33	33	43	43	43	43	43	43	43	43	43
		550S162	16	33	33	33	33	33	33	33	33	33	33	33	33
			24	33	33	33	33	33	33	33	33	33	33	33	33
—	110 mph	350S162	16	33	33	33	33	33	33	33	33	33	33	33	33
			24	33	33	33	43	43	43	43	43	54	54	54	54
		550S162	16	33	33	33	33	33	33	33	33	33	33	33	33
			24	33	33	33	33	33	33	33	33	33	33	33	33

For SI: 1 inch = 25.4 mm, 1 foot = 304.8 mm, 1 mil = 0.0254 mm, 1 mile per hour = 0.447 m/s, 1 pound per square foot = 0.0479 kPa, 1 Ksi = 1,000 psi = 6.895 MPa.

a. Deflection criterion: *L*/240.

b. Design load assumptions:
Second floor dead load is 10 psf.
Second floor live load is 30 psf.
Roof/ceiling dead load is 12 psf.
Attic live load is 10 psf.

c. Building width is in the direction of horizontal framing members supported by the wall studs.

TABLE R603.3.2(4)
28-FOOT-WIDE BUILDING SUPPORTING ROOF AND CEILING ONLY[a, b, c]
33 KSI STEEL



WIND SPEED		MEMBER SIZE	STUD SPACING (inches)	MINIMUM STUD THICKNESS (mils)											
				8-foot Studs				9-foot Studs				10-foot Studs			
Exp. B	Exp. C			Ground Snow Load (psf)											
				20	30	50	70	20	30	50	70	20	30	50	70
85 mph	—	350S162	16	33	33	33	33	33	33	33	33	33	33	33	33
			24	33	33	43	43	33	33	43	43	33	33	43	54
		550S162	16	33	33	33	33	33	33	33	33	33	33	33	33
			24	33	33	33	43	33	33	33	43	33	33	33	43
90 mph	—	350S162	16	33	33	33	33	33	33	33	33	33	33	33	33
			24	33	33	43	43	33	33	43	43	33	33	43	54
		550S162	16	33	33	33	33	33	33	33	33	33	33	33	33
			24	33	33	33	43	33	33	33	43	33	33	33	43
100 mph	85 mph	350S162	16	33	33	33	33	33	33	33	33	33	33	33	33
			24	33	33	43	43	33	33	43	43	43	43	43	54
		550S162	16	33	33	33	33	33	33	33	33	33	33	33	33
			24	33	33	33	43	33	33	33	43	33	33	33	43
110 mph	90 mph	350S162	16	33	33	33	33	33	33	33	33	33	33	33	43
			24	33	33	43	43	43	43	43	43	43	43	43	54
		550S162	16	33	33	33	33	33	33	33	33	33	33	33	33
			24	33	33	33	43	33	33	33	43	33	33	33	43
—	100 mph	350S162	16	33	33	33	33	33	33	33	33	43	43	43	43
			24	43	43	43	54	43	43	43	54	54	54	54	54
		550S162	16	33	33	33	33	33	33	33	33	33	33	33	33
			24	33	33	33	43	33	33	33	43	33	33	33	43
—	110 mph	350S162	16	33	33	33	33	43	43	43	43	43	43	43	43
			24	43	43	43	54	54	54	54	54	68	68	68	68
		550S162	16	33	33	33	33	33	33	33	33	33	33	33	33
			24	33	33	33	43	33	33	33	43	43	43	43	43

For SI: 1 inch = 25.4 mm, 1 foot = 304.8 mm, 1 mil = 0.0254 mm, 1 mile per hour = 0.447 m/s, 1 pound per square foot = 0.0479 kPa, 1 Ksi = 1,000 psi = 6.895 MPa.

a. Deflection criterion: *L*/240.

b. Design load assumptions:
Second floor dead load is 10 psf.
Second floor live load is 30 psf.
Roof/ceiling dead load is 12 psf.
Attic live load is 10 psf.

c. Building width is in the direction of horizontal framing members supported by the wall studs.

TABLE R603.3.2(5)
28-FOOT-WIDE BUILDING SUPPORTING ROOF AND CEILING ONLY[a, b, c]
50 KSI STEEL



WIND SPEED		MEMBER SIZE	STUD SPACING (inches)	MINIMUM STUD THICKNESS (mils)											
				8-foot Studs				9-foot Studs				10-foot Studs			
Exp. B	Exp. C			Ground Snow Load (psf)											
				20	30	50	70	20	30	50	70	20	30	50	70
85 mph	—	350S162	16	33	33	33	33	33	33	33	33	33	33	33	33
			24	33	33	33	43	33	33	33	43	33	33	33	43
		550S162	16	33	33	33	33	33	33	33	33	33	33	33	33
			24	33	33	33	33	33	33	33	33	33	33	33	33
90 mph	—	350S162	16	33	33	33	33	33	33	33	33	33	33	33	33
			24	33	33	33	43	33	33	33	43	33	33	33	43
		550S162	16	33	33	33	33	33	33	33	33	33	33	33	33
			24	33	33	33	33	33	33	33	33	33	33	33	33
100 mph	85 mph	350S162	16	33	33	33	33	33	33	33	33	33	33	33	33
			24	33	33	33	43	33	33	33	43	33	33	43	43
		550S162	16	33	33	33	33	33	33	33	33	33	33	33	33
			24	33	33	33	33	33	33	33	33	33	33	33	33
110 mph	90 mph	350S162	16	33	33	33	33	33	33	33	33	33	33	33	33
			24	33	33	33	43	33	33	33	43	43	43	43	43
		550S162	16	33	33	33	33	33	33	33	33	33	33	33	33
			24	33	33	33	33	33	33	33	33	33	33	33	33
—	100 mph	350S162	16	33	33	33	33	33	33	33	33	33	33	33	33
			24	33	33	33	43	43	43	43	43	43	43	43	43
		550S162	16	33	33	33	33	33	33	33	33	33	33	33	33
			24	33	33	33	43	33	33	33	33	33	33	33	33
—	110 mph	350S162	16	33	33	33	33	33	33	33	33	33	33	33	33
			24	33	33	43	43	43	43	43	43	54	54	54	54
		550S162	16	33	33	33	33	33	33	33	33	33	33	33	33
			24	33	33	33	33	33	33	33	33	33	33	33	43

For SI: 1 inch = 25.4 mm, 1 foot = 304.8 mm, 1 mil = 0.0254 mm, 1 mile per hour = 0.447 m/s, 1 pound per square foot = 0.0479 kPa, 1 Ksi = 1,000 psi = 6.895 MPa.

a. Deflection criterion: *L*/240.

b. Design load assumptions:
Second floor dead load is 10 psf.
Second floor live load is 30 psf.
Roof/ceiling dead load is 12 psf.
Attic live load is 10 psf.

c. Building width is in the direction of horizontal framing members supported by the wall studs.

TABLE R603.3.2(6)
32-FOOT-WIDE BUILDING SUPPORTING ROOF AND CEILING ONLY[a, b, c]
33 KSI STEEL



WIND SPEED		MEMBER SIZE	STUD SPACING (inches)	MINIMUM STUD THICKNESS (mils)											
				8-foot Studs				9-foot Studs				10-foot Studs			
Exp. B	Exp. C			Ground Snow Load (psf)											
				20	30	50	70	20	30	50	70	20	30	50	70
85 mph	—	350S162	16	33	33	33	33	33	33	33	33	33	33	33	43
			24	33	33	43	54	33	33	43	43	33	33	43	54
		550S162	16	33	33	33	33	33	33	33	33	33	33	33	33
			24	33	33	33	43	33	33	33	43	33	33	33	43
90 mph	—	350S162	16	33	33	33	33	33	33	33	33	33	33	33	43
			24	33	33	43	54	33	33	43	43	33	33	43	54
		550S162	16	33	33	33	33	33	33	33	33	33	33	33	33
			24	33	33	33	43	33	33	33	43	33	33	33	43
100 mph	85 mph	350S162	16	33	33	33	33	33	33	33	33	33	33	33	43
			24	33	33	43	54	33	33	43	54	43	43	43	54
		550S162	16	33	33	33	33	33	33	33	33	33	33	33	33
			24	33	33	33	43	33	33	33	43	33	33	33	43
110 mph	90 mph	350S162	16	33	33	33	43	33	33	33	33	33	33	33	43
			24	33	33	43	54	43	43	43	54	43	43	43	54
		550S162	16	33	33	33	33	33	33	33	33	33	33	33	33
			24	33	33	33	43	33	33	33	43	33	33	43	43
—	100 mph	350S162	16	33	33	33	43	33	33	33	43	43	43	43	43
			24	43	43	43	54	43	43	43	54	54	54	54	54
		550S162	16	33	33	33	33	33	33	33	33	33	33	33	33
			24	33	33	43	43	33	33	33	43	33	33	43	43
—	110 mph	350S162	16	33	33	33	43	43	43	43	43	43	43	43	43
			24	43	43	43	54	54	54	54	54	68	68	68	68
		550S162	16	33	33	33	33	33	33	33	33	33	33	33	33
			24	33	33	43	43	33	33	43	43	43	43	43	43

For SI: 1 inch = 25.4 mm, 1 foot = 304.8 mm, 1 mil = 0.0254 mm, 1 mile per hour = 0.447 m/s, 1 pound per square foot = 0.0479 kPa, 1 Ksi = 1,000 psi = 6.895 MPa.

a. Deflection criterion: *L*/240.

b. Design load assumptions:
Second floor dead load is 10 psf.
Second floor live load is 30 psf.
Roof/ceiling dead load is 12 psf.
Attic live load is 10 psf.

c. Building width is in the direction of horizontal framing members supported by the wall studs.

TABLE R603.3.2(7)
32-FOOT-WIDE BUILDING SUPPORTING ROOF AND CEILING ONLY[a, b, c]
50 KSI STEEL



WIND SPEED		MEMBER SIZE	STUD SPACING (inches)	MINIMUM STUD THICKNESS (mils)											
				8-foot Studs				9-foot Studs				10-foot Studs			
Exp. B	Exp. C			Ground Snow Load (psf)											
				20	30	50	70	20	30	50	70	20	30	50	70
85 mph	—	350S162	16	33	33	33	33	33	33	33	33	33	33	33	33
			24	33	33	33	43	33	33	33	43	33	33	43	43
		550S162	16	33	33	33	33	33	33	33	33	33	33	33	33
			24	33	33	33	43	33	33	33	33	33	33	33	43
90 mph	—	350S162	16	33	33	33	33	33	33	33	33	33	33	33	33
			24	33	33	33	43	33	33	33	43	33	33	43	43
		550S162	16	33	33	33	33	33	33	33	33	33	33	33	33
			24	33	33	33	43	33	33	33	33	33	33	33	43
100 mph	85 mph	350S162	16	33	33	33	33	33	33	33	33	33	33	33	33
			24	33	33	43	43	33	33	33	43	33	33	43	43
		550S162	16	33	33	33	33	33	33	33	33	33	33	33	33
			24	33	33	33	43	33	33	33	33	33	33	33	43
110 mph	90 mph	350S162	16	33	33	33	33	33	33	33	33	33	33	33	33
			24	33	33	43	43	33	33	33	43	43	43	43	54
		550S162	16	33	33	33	33	33	33	33	33	33	33	33	33
			24	33	33	33	43	33	33	33	33	33	33	33	43
—	100 mph	350S162	16	33	33	33	33	33	33	33	33	33	33	33	33
			24	33	33	43	43	43	43	43	43	43	43	43	54
		550S162	16	33	33	33	33	33	33	33	33	33	33	33	33
			24	33	33	33	43	33	33	33	43	33	33	33	43
—	110 mph	350S162	16	33	33	33	33	33	33	33	33	33	33	33	43
			24	33	33	43	43	43	43	43	43	54	54	54	54
		550S162	16	33	33	33	33	33	33	33	33	33	33	33	33
			24	33	33	33	43	33	33	33	43	33	33	33	43

For SI: 1 inch = 25.4 mm, 1 foot = 304.8 mm, 1 mil = 0.0254 mm, 1 mile per hour = 0.447 m/s, 1 pound per square foot = 0.0479 kPa, 1 Ksi = 1,000 psi = 6.895 MPa.

a. Deflection criterion: *L*/240.

b. Design load assumptions:
Second floor dead load is 10 psf.
Second floor live load is 30 psf.
Roof/ceiling dead load is 12 psf.
Attic live load is 10 psf.

c. Building width is in the direction of horizontal framing members supported by the wall studs.

TABLE R603.3.2(8)
36-FOOT-WIDE BUILDING SUPPORTING ROOF AND CEILING ONLY[a, b, c]
33 KSI STEEL



WIND SPEED		MEMBER SIZE	STUD SPACING (inches)	MINIMUM STUD THICKNESS (mils)											
				8-foot Studs				9-foot Studs				10-foot Studs			
				Ground Snow Load (psf)											
Exp. B	Exp. C			20	30	50	70	20	30	50	70	20	30	50	70
85 mph	—	350S162	16	33	33	33	43	33	33	33	43	33	33	33	43
			24	33	33	43	54	33	33	43	54	33	43	43	54
		550S162	16	33	33	33	33	33	33	33	33	33	33	33	33
			24	33	33	43	43	33	33	43	43	33	33	43	43
90 mph	—	350S162	16	33	33	33	43	33	33	33	43	33	33	33	43
			24	33	33	43	54	33	33	43	54	33	43	43	54
		550S162	16	33	33	33	33	33	33	33	33	33	33	33	33
			24	33	33	43	43	33	33	43	43	33	33	43	43
100 mph	85 mph	350S162	16	33	33	33	43	33	33	33	43	33	33	33	43
			24	33	33	43	54	33	33	43	54	43	43	54	54
		550S162	16	33	33	33	33	33	33	33	33	33	33	33	33
			24	33	33	43	43	33	33	43	43	33	33	43	43
110 mph	90 mph	350S162	16	33	33	33	43	33	33	33	33	33	33	33	43
			24	33	33	43	54	43	43	43	43	43	43	54	68
		550S162	16	33	33	33	33	33	33	33	33	33	33	33	33
			24	33	33	43	43	33	33	43	43	33	33	43	43
—	100 mph	350S162	16	33	33	33	43	33	33	33	43	43	43	43	43
			24	43	43	43	54	43	43	43	54	54	54	54	68
		550S162	16	33	33	33	33	33	33	33	33	33	33	33	33
			24	33	33	43	43	33	33	43	43	33	33	43	43
—	110 mph	350S162	16	33	33	33	43	43	43	43	43	43	43	43	43
			24	43	43	54	54	54	54	54	54	68	68	68	68
		550S162	16	33	33	33	33	33	33	33	33	33	33	33	33
			24	33	33	43	54	33	33	43	43	43	43	43	54

For SI: 1 inch = 25.4 mm, 1 foot = 304.8 mm, 1 mil = 0.0254 mm, 1 mile per hour = 0.447 m/s, 1 pound per square foot = 0.0479 kPa, 1 Ksi = 1,000 psi = 6.895 MPa.

a. Deflection criterion: *L*/240.

b. Design load assumptions:
Second floor dead load is 10 psf.
Second floor live load is 30 psf.
Roof/ceiling dead load is 12 psf.
Attic live load is 10 psf.

c. Building width is in the direction of horizontal framing members supported by the wall studs.

TABLE R603.3.2(9)
36-FOOT-WIDE BUILDING SUPPORTING ROOF AND CEILING ONLY[a, b, c]
50 KSI STEEL



WIND SPEED		MEMBER SIZE	STUD SPACING (inches)	MINIMUM STUD THICKNESS (mils)											
				8-foot Studs				9-foot Studs				10-foot Studs			
Exp. B	Exp. C			Ground Snow Load (psf)											
				20	30	50	70	20	30	50	70	20	30	50	70
85 mph	—	350S162	16	33	33	33	33	33	33	33	33	33	33	33	33
			24	33	33	43	43	33	33	43	43	33	33	43	54
		550S162	16	33	33	33	33	33	33	33	33	33	33	33	33
			24	33	33	33	43	33	33	33	43	33	33	33	43
90 mph	—	350S162	16	33	33	33	33	33	33	33	33	33	33	33	33
			24	33	33	43	43	33	33	43	43	33	33	43	54
		550S162	16	33	33	33	33	33	33	33	33	33	33	33	33
			24	33	33	33	43	33	33	33	43	33	33	33	43
100 mph	85 mph	350S162	16	33	33	33	33	33	33	33	33	33	33	33	33
			24	33	33	43	43	33	33	43	43	33	33	43	54
		550S162	16	33	33	33	33	33	33	33	33	33	33	33	33
			24	33	33	33	43	33	33	33	43	33	33	33	43
110 mph	90 mph	350S162	16	33	33	33	33	33	33	33	33	33	33	33	43
			24	33	33	43	54	33	33	33	43	43	43	43	54
		550S162	16	33	33	33	33	33	33	33	33	33	33	33	33
			24	33	33	33	43	33	33	33	43	33	33	33	43
—	100 mph	350S162	16	33	33	33	33	33	33	33	33	33	33	33	43
			24	33	33	33	54	43	43	43	43	43	43	43	54
		550S162	16	33	33	33	33	33	33	33	33	33	33	33	33
			24	33	33	33	43	33	33	33	43	33	33	33	43
—	110 mph	350S162	16	33	33	33	43	33	33	33	33	33	33	33	43
			24	33	33	43	54	43	43	43	54	54	54	54	54
		550S162	16	33	33	33	33	33	33	33	33	33	33	33	33
			24	33	33	33	43	33	33	33	43	33	33	33	43

For SI: 1 inch = 25.4 mm, 1 foot = 304.8 mm, 1 mil = 0.0254 mm, 1 mile per hour = 0.447 m/s, 1 pound per square foot = 0.0479 kPa, 1 Ksi = 1,000 psi = 6.895 MPa.

a. Deflection criterion: *L*/240.

b. Design load assumptions:
Second floor dead load is 10 psf.
Second floor live load is 30 psf.
Roof/ceiling dead load is 12 psf.
Attic live load is 10 psf.

c. Building width is in the direction of horizontal framing members supported by the wall studs.

TABLE R603.3.2(10)
40-FOOT-WIDE BUILDING SUPPORTING ROOF AND CEILING ONLY[a, b, c]
33 KSI STEEL



WIND SPEED		MEMBER SIZE	STUD SPACING (inches)	MINIMUM STUD THICKNESS (mils)											
				8-foot Studs				9-foot Studs				10-foot Studs			
				Ground Snow Load (psf)											
Exp. B	Exp. C			20	30	50	70	20	30	50	70	20	30	50	70
85 mph	—	350S162	16	33	33	33	43	33	33	33	43	33	33	33	43
			24	33	33	43	54	33	33	43	54	43	43	54	68
		550S162	16	33	33	33	33	33	33	33	33	33	33	33	33
			24	33	33	43	54	33	33	43	43	33	33	43	54
90 mph	—	350S162	16	33	33	33	43	33	33	33	43	33	33	33	43
			24	33	33	43	54	33	33	43	54	43	43	54	68
		550S162	16	33	33	33	33	33	33	33	33	33	33	33	33
			24	33	33	43	54	33	33	43	43	33	33	43	54
100 mph	85 mph	350S162	16	33	33	33	43	33	33	33	43	33	33	33	43
			24	33	43	43	54	33	43	43	54	43	43	54	68
		550S162	16	33	33	33	43	33	33	33	33	33	33	33	33
			24	33	33	43	54	33	33	43	43	33	33	43	54
110 mph	90 mph	350S162	16	33	33	33	43	33	33	33	43	33	33	43	43
			24	33	43	43	54	43	43	43	54	43	43	54	68
		550S162	16	33	33	33	43	33	33	33	33	33	33	33	43
			24	33	33	43	54	33	33	43	43	33	33	43	54
—	100 mph	350S162	16	33	33	33	43	33	33	33	43	43	43	43	43
			24	43	43	54	68	43	43	54	54	54	54	54	68
		550S162	16	33	33	33	43	33	33	33	33	33	33	33	43
			24	33	33	43	54	33	33	43	54	33	33	43	54
—	110 mph	350S162	16	33	33	43	43	43	43	43	43	43	43	43	54
			24	43	43	54	68	54	54	54	68	68	68	68	68
		550S162	16	33	33	33	43	33	33	33	43	33	33	33	43
			24	33	33	43	54	33	33	43	54	43	43	43	54

For SI: 1 inch = 25.4 mm, 1 foot = 304.8 mm, 1 mil = 0.0254 mm, 1 mile per hour = 0.447 m/s, 1 pound per square foot = 0.0479 kPa, 1 Ksi = 1,000 psi = 6.895 MPa.

a. Deflection criterion: *L*/240.

b. Design load assumptions:
- Second floor dead load is 10 psf.
- Second floor live load is 30 psf.
- Roof/ceiling dead load is 12 psf.
- Attic live load is 10 psf.

c. Building width is in the direction of horizontal framing members supported by the wall studs.

TABLE R603.3.2(11)
40-FOOT-WIDE BUILDING SUPPORTING ROOF AND CEILING ONLY[a, b, c]
50 KSI STEEL



WIND SPEED		MEMBER SIZE	STUD SPACING (inches)	MINIMUM STUD THICKNESS (mils)											
				8-foot Studs				9-foot Studs				10-foot Studs			
Exp. B	Exp. C			Ground Snow Load (psf)											
				20	30	50	70	20	30	50	70	20	30	50	70
85 mph	—	350S162	16	33	33	33	33	33	33	33	33	33	33	33	43
			24	33	33	43	54	33	33	43	43	33	33	43	54
		550S162	16	33	33	33	33	33	33	33	33	33	33	33	33
			24	33	33	33	43	33	33	33	43	33	33	33	43
90 mph	—	350S162	16	33	33	33	33	33	33	33	33	33	33	33	43
			24	33	33	43	54	33	33	43	43	33	33	43	54
		550S162	16	33	33	33	33	33	33	33	33	33	33	33	33
			24	33	33	33	43	33	33	33	43	33	33	33	43
100 mph	85 mph	350S162	16	33	33	33	43	33	33	33	33	33	33	33	43
			24	33	33	43	54	33	33	43	54	33	33	43	54
		550S162	16	33	33	33	33	33	33	33	33	33	33	33	33
			24	33	33	33	43	33	33	33	43	33	33	33	43
110 mph	90 mph	350S162	16	33	33	33	43	33	33	33	33	33	33	33	43
			24	33	33	43	54	33	33	43	54	43	43	43	54
		550S162	16	33	33	33	33	33	33	33	33	33	33	33	33
			24	33	33	33	43	33	33	33	43	33	33	33	43
—	100 mph	350S162	16	33	33	33	43	33	33	33	43	33	33	33	43
			24	33	33	43	54	43	43	43	54	43	43	54	54
		550S162	16	33	33	33	33	33	33	33	33	33	33	33	33
			24	33	33	43	43	33	33	33	43	33	33	43	43
—	110 mph	350S162	16	33	33	33	43	33	33	33	43	33	33	33	43
			24	33	33	43	54	43	43	43	54	54	54	54	68
		550S162	16	33	33	33	33	33	33	33	33	33	33	33	33
			24	33	33	43	43	33	33	33	43	33	33	43	43

For SI: 1 inch = 25.4 mm, 1 foot = 304.8 mm, 1 mil = 0.0254 mm, 1 mile per hour = 0.447 m/s, 1 pound per square foot = 0.0479 kPa, 1 Ksi = 1,000 psi = 6.895 MPa.

a. Deflection criterion: *L*/240.

b. Design load assumptions:
Second floor dead load is 10 psf.
Second floor live load is 30 psf.
Roof/ceiling dead load is 12 psf.
Attic live load is 10 psf.

c. Building width is in the direction of horizontal framing members supported by the wall studs.

TABLE R603.3.2(12)
24-FOOT-WIDE BUILDING SUPPORTING ONE FLOOR, ROOF AND CEILING[a, b, c]
33 KSI STEEL



WIND SPEED		MEMBER SIZE	STUD SPACING (inches)	MINIMUM STUD THICKNESS (mils)											
				8-foot Studs				9-foot Studs				10-foot Studs			
Exp. B	Exp. C			Ground Snow Load (psf)											
				20	30	50	70	20	30	50	70	20	30	50	70
85 mph	—	350S162	16	33	33	33	33	33	33	33	33	33	33	33	43
			24	33	33	43	43	33	43	43	43	43	43	43	54
		550S162	16	33	33	33	33	33	33	33	33	33	33	33	33
			24	33	33	33	43	33	33	33	43	33	33	33	43
90 mph	—	350S162	16	33	33	33	33	33	33	33	33	33	33	33	43
			24	33	33	43	43	33	43	43	43	43	43	43	54
		550S162	16	33	33	33	33	33	33	33	33	33	33	33	33
			24	33	33	33	43	33	33	33	43	33	33	33	43
100 mph	85 mph	350S162	16	33	33	33	33	33	33	33	33	33	33	33	43
			24	33	43	43	43	43	43	43	43	43	43	43	54
		550S162	16	33	33	33	33	33	33	33	33	33	33	33	33
			24	33	33	33	43	33	33	33	43	33	33	33	43
110 mph	90 mph	350S162	16	33	33	33	43	33	33	33	33	33	33	43	43
			24	43	43	43	43	43	43	43	43	54	54	54	54
		550S162	16	33	33	33	33	33	33	33	33	33	33	33	33
			24	33	33	33	43	33	33	33	43	43	43	43	43
—	100 mph	350S162	16	33	33	33	43	33	33	33	43	43	43	43	43
			24	43	43	43	54	43	43	54	54	54	54	54	54
		550S162	16	33	33	33	33	33	33	33	33	33	33	33	33
			24	33	33	33	43	43	43	43	43	43	43	43	43
—	110 mph	350S162	16	33	33	33	43	43	43	43	43	43	43	43	43
			24	43	43	43	54	54	54	54	54	68	68	68	68
		550S162	16	33	33	33	33	33	33	33	33	33	33	33	33
			24	43	43	43	43	43	43	43	43	43	43	43	43

For SI: 1 inch = 25.4 mm, 1 foot = 304.8 mm, 1 mil = 0.0254 mm, 1 mile per hour = 0.447 m/s, 1 pound per square foot = 0.0479 kPa, 1 Ksi = 1,000 psi = 6.895 MPa.

a. Deflection criterion: $L/240$.

b. Design load assumptions:
Second floor dead load is 10 psf.
Second floor live load is 30 psf.
Roof/ceiling dead load is 12 psf.
Attic live load is 10 psf.

c. Building width is in the direction of horizontal framing members supported by the wall studs.

TABLE R603.3.2(13)
24-FOOT-WIDE BUILDING SUPPORTING ONE FLOOR, ROOF AND CEILING[a, b, c]
50 KSI STEEL



WIND SPEED		MEMBER SIZE	STUD SPACING (inches)	MINIMUM STUD THICKNESS (mils)											
				8-foot Studs				9-foot Studs				10-foot Studs			
Exp. B	Exp. C			Ground Snow Load (psf)											
				20	30	50	70	20	30	50	70	20	30	50	70
85 mph	—	350S162	16	33	33	33	33	33	33	33	33	33	33	33	33
			24	33	33	33	43	33	33	33	43	33	33	43	43
		550S162	16	33	33	33	33	33	33	33	33	33	33	33	33
			24	33	33	33	33	33	33	33	33	33	33	33	33
90 mph	—	350S162	16	33	33	33	33	33	33	33	33	33	33	33	33
			24	33	33	33	43	33	33	33	43	33	33	43	43
		550S162	16	33	33	33	33	33	33	33	33	33	33	33	33
			24	33	33	33	33	33	33	33	33	33	33	33	33
100 mph	85 mph	350S162	16	33	33	33	33	33	33	33	33	33	33	33	33
			24	33	33	33	43	33	33	33	43	43	43	43	43
		550S162	16	33	33	33	33	33	33	33	33	33	33	33	33
			24	33	33	33	33	33	33	33	33	33	33	33	33
110 mph	90 mph	350S162	16	33	33	33	33	33	33	33	33	33	33	33	33
			24	33	33	43	43	33	33	43	43	43	43	43	43
		550S162	16	33	33	33	33	33	33	33	33	33	33	33	33
			24	33	33	33	33	33	33	33	33	33	33	33	33
—	100 mph	350S162	16	33	33	33	33	33	33	33	33	33	33	33	33
			24	33	33	43	43	43	43	43	43	43	43	43	54
		550S162	16	33	33	33	33	33	33	33	33	33	33	33	33
			24	33	33	33	43	33	33	33	33	33	33	33	43
—	110 mph	350S162	16	33	33	33	33	33	33	33	33	33	33	43	43
			24	43	43	43	43	43	43	43	43	54	54	54	54
		550S162	16	33	33	33	33	33	33	33	33	33	33	33	33
			24	33	33	33	43	33	33	33	33	33	33	33	43

For SI: 1 inch = 25.4 mm, 1 foot = 304.8 mm, 1 mil = 0.0254 mm, 1 mile per hour = 0.447 m/s, 1 pound per square foot = 0.0479 kPa, 1 Ksi = 1,000 psi = 6.895 MPa.

a. Deflection criterion: *L*/240.

b. Design load assumptions:
Second floor dead load is 10 psf.
Second floor live load is 30 psf.
Roof/ceiling dead load is 12 psf.
Attic live load is 10 psf.

c. Building width is in the direction of horizontal framing members supported by the wall studs.

TABLE R603.3.2(14)
28-FOOT-WIDE BUILDING SUPPORTING ONE FLOOR, ROOF AND CEILING[a, b, c]
33 KSI STEEL



WIND SPEED		MEMBER SIZE	STUD SPACING (inches)	MINIMUM STUD THICKNESS (mils)											
				8-foot Studs				9-foot Studs				10-foot Studs			
				Ground Snow Load (psf)											
Exp. B	Exp. C			20	30	50	70	20	30	50	70	20	30	50	70
85 mph	—	350S162	16	33	33	33	43	33	33	33	43	33	33	33	43
			24	43	43	43	54	43	43	43	54	43	43	43	54
		550S162	16	33	33	33	33	33	33	33	33	33	33	33	33
			24	33	33	43	43	33	33	43	43	33	33	43	43
90 mph	—	350S162	16	33	33	33	43	33	33	33	43	33	33	33	43
			24	43	43	43	54	43	43	43	54	43	43	43	54
		550S162	16	33	33	33	33	33	33	33	33	33	33	33	33
			24	33	33	43	43	33	33	43	43	33	33	43	43
100 mph	85 mph	350S162	16	33	33	33	43	33	33	33	43	33	33	43	43
			24	43	43	43	54	43	43	43	54	43	43	54	54
		550S162	16	33	33	33	33	33	33	33	33	33	33	33	33
			24	33	33	43	43	33	33	43	43	33	33	43	43
110 mph	90 mph	350S162	16	33	33	33	43	33	33	33	43	43	43	43	43
			24	43	43	43	54	43	43	43	54	54	54	54	54
		550S162	16	33	33	33	33	33	33	33	33	33	33	33	33
			24	33	33	43	43	33	33	43	43	43	43	43	43
—	100 mph	350S162	16	33	33	33	43	33	33	43	43	43	43	43	43
			24	43	43	43	54	54	54	54	54	54	54	54	68
		550S162	16	33	33	33	33	33	33	33	33	33	33	33	33
			24	33	33	43	43	43	43	43	43	43	43	43	43
—	110 mph	350S162	16	33	33	43	43	43	43	43	43	43	43	43	54
			24	43	43	54	54	54	54	54	54	68	68	68	68
		550S162	16	33	33	33	33	33	33	33	33	33	33	33	33
			24	43	43	43	43	43	43	43	43	43	43	43	43

For SI: 1 inch = 25.4 mm, 1 foot = 304.8 mm, 1 mil = 0.0254 mm, 1 mile per hour = 0.447 m/s, 1 pound per square foot = 0.0479 kPa, 1 Ksi = 1,000 psi = 6.895 MPa.

a. Deflection criterion: *L*/240.

b. Design load assumptions:
Second floor dead load is 10 psf.
Second floor live load is 30 psf.
Roof/ceiling dead load is 12 psf.
Attic live load is 10 psf.

c. Building width is in the direction of horizontal framing members supported by the wall studs.

TABLE R603.3.2(15)
28-FOOT-WIDE BUILDING SUPPORTING ONE FLOOR, ROOF AND CEILING[a, b, c]
50 KSI STEEL



WIND SPEED		MEMBER SIZE	STUD SPACING (inches)	MINIMUM STUD THICKNESS (mils)											
				8-foot Studs				9-foot Studs				10-foot Studs			
				Ground Snow Load (psf)											
Exp. B	Exp. C			20	30	50	70	20	30	50	70	20	30	50	70
85 mph	—	350S162	16	33	33	33	33	33	33	33	33	33	33	33	33
			24	33	33	43	43	33	33	43	43	43	43	43	54
		550S162	16	33	33	33	33	33	33	33	33	33	33	33	33
			24	33	33	33	43	33	33	33	43	33	33	33	43
90 mph	—	350S162	16	33	33	33	33	33	33	33	33	33	33	33	33
			24	33	33	43	43	33	33	43	43	43	43	43	54
		550S162	16	33	33	33	33	33	33	33	33	33	33	33	33
			24	33	33	33	43	33	33	33	43	33	33	33	43
100 mph	85 mph	350S162	16	33	33	33	33	33	33	33	33	33	33	33	43
			24	33	33	43	43	33	33	43	43	43	43	43	54
		550S162	16	33	33	33	33	33	33	33	33	33	33	33	33
			24	33	33	33	43	33	33	33	43	33	33	33	43
110 mph	90 mph	350S162	16	33	33	33	33	33	33	33	33	33	33	33	43
			24	33	33	43	43	43	43	43	43	43	43	43	54
		550S162	16	33	33	33	33	33	33	33	33	33	33	33	33
			24	33	33	33	43	33	33	33	43	33	33	33	43
—	100 mph	350S162	16	33	33	33	33	33	33	33	33	33	33	33	43
			24	43	43	43	54	43	43	43	43	43	43	54	54
		550S162	16	33	33	33	33	33	33	33	33	33	33	33	33
			24	33	33	33	43	33	33	33	43	33	33	33	43
—	110 mph	350S162	16	33	33	33	43	33	33	33	33	43	43	43	43
			24	43	43	43	54	43	43	43	43	54	54	54	54
		550S162	16	33	33	33	33	33	33	33	33	33	33	33	33
			24	33	33	33	43	33	33	33	43	33	33	33	43

For SI: 1 inch = 25.4 mm, 1 foot = 304.8 mm, 1 mil = 0.0254 mm, 1 mile per hour = 0.447 m/s, 1 pound per square foot = 0.0479 kPa, 1 Ksi = 1,000 psi = 6.895 MPa.

a. Deflection criterion: *L*/240.

b. Design load assumptions:
Second floor dead load is 10 psf.
Second floor live load is 30 psf.
Roof/ceiling dead load is 12 psf.
Attic live load is 10 psf.

c. Building width is in the direction of horizontal framing members supported by the wall studs.

TABLE R603.3.2(16)
32-FOOT-WIDE BUILDING SUPPORTING ONE FLOOR, ROOF AND CEILING[a, b, c]
33 KSI STEEL



WIND SPEED		MEMBER SIZE	STUD SPACING (inches)	MINIMUM STUD THICKNESS (mils)											
				8-foot Studs				9-foot Studs				10-foot Studs			
Exp. B	Exp. C			Ground Snow Load (psf)											
				20	30	50	70	20	30	50	70	20	30	50	70
85 mph	—	350S162	16	33	33	33	43	33	33	33	43	33	33	43	43
			24	43	43	43	54	43	43	43	54	43	43	54	54
		550S162	16	33	33	33	43	33	33	33	33	33	33	33	43
			24	33	43	43	54	33	33	43	43	33	33	43	43
90 mph	—	350S162	16	33	33	33	43	33	33	33	43	33	33	43	43
			24	43	43	43	54	43	43	43	54	43	43	54	54
		550S162	16	33	33	33	43	33	33	33	33	33	33	33	43
			24	33	43	43	54	33	33	43	43	33	33	43	43
100 mph	85 mph	350S162	16	33	33	33	43	33	33	33	43	33	43	43	43
			24	43	43	43	54	43	43	43	54	54	54	54	68
		550S162	16	33	33	33	43	33	33	33	33	33	33	33	43
			24	33	43	43	54	33	33	43	43	33	33	43	43
110 mph	90 mph	350S162	16	33	33	43	43	33	33	33	43	43	43	43	43
			24	43	43	54	54	43	43	54	54	54	54	54	68
		550S162	16	33	33	33	43	33	33	33	33	33	33	33	43
			24	33	43	43	54	33	33	43	43	43	43	43	54
—	100 mph	350S162	16	33	33	43	43	43	43	43	43	43	43	43	43
			24	43	43	54	54	54	54	54	54	54	54	54	54
		550S162	16	33	33	33	43	33	33	33	33	33	33	33	43
			24	33	43	43	54	43	43	43	43	43	43	43	54
—	110 mph	350S162	16	43	43	43	43	43	43	43	43	43	43	54	54
			24	54	54	54	68	54	54	54	68	68	68	68	68
		550S162	16	33	33	33	43	33	33	33	43	33	33	33	43
			24	43	43	43	54	43	43	43	43	43	43	43	54

For SI: 1 inch = 25.4 mm, 1 foot = 304.8 mm, 1 mil = 0.0254 mm, 1 mile per hour = 0.447 m/s, 1 pound per square foot = 0.0479 kPa, 1 Ksi = 1,000 psi = 6.895 MPa.

a. Deflection criterion: *L*/240.

b. Design load assumptions:
Second floor dead load is 10 psf.
Second floor live load is 30 psf.
Roof/ceiling dead load is 12 psf.
Attic live load is 10 psf.

c. Building width is in the direction of horizontal framing members supported by the wall studs.

TABLE R603.3.2(17)
32-FOOT-WIDE BUILDING SUPPORTING ONE FLOOR, ROOF AND CEILING[a, b, c]
50 KSI STEEL



WIND SPEED		MEMBER SIZE	STUD SPACING (inches)	MINIMUM STUD THICKNESS (mils)											
				8-foot Studs				9-foot Studs				10-foot Studs			
Exp. B	Exp. C			Ground Snow Load (psf)											
				20	30	50	70	20	30	50	70	20	30	50	70
85 mph	—	350S162	16	33	33	33	43	33	33	33	33	33	33	33	43
			24	33	33	43	54	33	33	43	43	43	43	43	54
		550S162	16	33	33	33	33	33	33	33	33	33	33	33	33
			24	33	33	43	43	33	33	33	43	33	33	33	43
90 mph	—	350S162	16	33	33	33	43	33	33	33	33	33	33	33	43
			24	33	33	43	54	33	33	43	43	43	43	43	54
		550S162	16	33	33	33	33	33	33	33	33	33	33	33	33
			24	33	33	43	43	33	33	33	43	33	33	33	43
100 mph	85 mph	350S162	16	33	33	33	43	33	33	33	33	33	33	33	43
			24	33	33	43	54	33	33	43	43	43	43	43	54
		550S162	16	33	33	33	33	33	33	33	33	33	33	33	33
			24	33	33	43	43	33	33	33	43	33	33	33	43
110 mph	90 mph	350S162	16	33	33	33	43	33	33	33	33	33	33	33	43
			24	43	43	43	54	43	43	43	54	43	43	54	54
		550S162	16	33	33	33	33	33	33	33	33	33	33	33	33
			24	33	33	43	43	33	33	33	43	33	33	33	43
—	100 mph	350S162	16	33	33	33	43	33	33	33	43	33	33	43	43
			24	43	43	43	54	43	43	43	54	54	54	54	54
		550S162	16	33	33	33	33	33	33	33	33	33	33	33	33
			24	33	33	43	43	33	33	33	43	33	33	43	43
—	110 mph	350S162	16	33	33	33	43	33	33	33	43	43	43	43	43
			24	43	43	43	54	43	43	43	54	54	54	54	54
		550S162	16	33	33	33	33	33	33	33	33	33	33	33	33
			24	33	33	43	43	33	33	33	43	33	33	43	43

For SI: 1 inch = 25.4 mm, 1 foot = 304.8 mm, 1 mil = 0.0254 mm, 1 mile per hour = 0.447 m/s, 1 pound per square foot = 0.0479 kPa, 1 Ksi = 1,000 psi = 6.895 MPa.

a. Deflection criterion: *L*/240.

b. Design load assumptions:
Second floor dead load is 10 psf.
Second floor live load is 30 psf.
Roof/ceiling dead load is 12 psf.
Attic live load is 10 psf.

c. Building width is in the direction of horizontal framing members supported by the wall studs.

TABLE R603.3.2(18)
36-FOOT-WIDE BUILDING SUPPORTING ONE FLOOR, ROOF AND CEILING[a, b, c]
33 KSI STEEL



WIND SPEED		MEMBER SIZE	STUD SPACING (inches)	MINIMUM STUD THICKNESS (mils)											
				8-foot Studs				9-foot Studs				10-foot Studs			
Exp. B	Exp. C			Ground Snow Load (psf)											
				20	30	50	70	20	30	50	70	20	30	50	70
85 mph	—	350S162	16	33	33	43	43	33	33	43	43	33	33	43	43
			24	43	43	54	54	43	43	54	54	54	54	54	68
		550S162	16	33	33	33	43	33	33	33	43	33	33	33	43
			24	43	43	43	54	43	43	43	54	43	43	43	54
90 mph	—	350S162	16	33	33	43	43	33	33	43	43	33	33	43	43
			24	43	43	54	54	43	43	54	54	54	54	54	68
		550S162	16	33	33	33	43	33	33	33	43	33	33	33	43
			24	43	43	43	54	43	43	43	54	43	43	43	54
100 mph	85 mph	350S162	16	33	33	43	43	33	33	43	43	43	43	43	43
			24	43	43	54	68	43	43	54	54	54	54	54	68
		550S162	16	33	33	33	43	33	33	33	43	33	33	33	43
			24	43	43	43	54	43	43	43	54	43	43	43	54
110 mph	90 mph	350S162	16	33	33	43	43	33	33	43	43	43	43	43	54
			24	43	43	54	68	54	54	54	54	54	54	54	68
		550S162	16	33	33	33	43	33	33	33	43	33	33	33	43
			24	43	43	43	54	43	43	43	54	43	43	43	54
—	100 mph	350S162	16	33	33	43	43	43	43	43	43	43	43	43	54
			24	54	54	54	68	54	54	54	68	54	68	68	68
		550S162	16	33	33	33	43	33	33	33	43	33	33	33	43
			24	43	43	43	54	43	43	43	54	43	43	43	54
—	110 mph	350S162	16	43	43	43	43	43	43	43	43	43	54	54	54
			24	54	54	54	68	54	54	54	68	68	68	68	68
		550S162	16	33	33	33	43	33	33	33	43	33	33	33	43
			24	43	43	43	54	43	43	43	54	43	43	43	54

For SI: 1 inch = 25.4 mm, 1 foot = 304.8 mm, 1 mil = 0.0254 mm, 1 mile per hour = 0.447 m/s, 1 pound per square foot = 0.0479 kPa, 1 Ksi = 1,000 psi = 6.895 MPa.

a. Deflection criterion: *L*/240.

b. Design load assumptions:
Second floor dead load is 10 psf.
Second floor live load is 30 psf.
Roof/ceiling dead load is 12 psf.
Attic live load is 10 psf.

c. Building width is in the direction of horizontal framing members supported by the wall studs.

TABLE R603.3.2(19)
36-FOOT-WIDE BUILDING SUPPORTING ONE FLOOR, ROOF AND CEILING[a, b, c]
50 KSI STEEL



WIND SPEED		MEMBER SIZE	STUD SPACING (inches)	MINIMUM STUD THICKNESS (mils)											
				8-foot Studs				9-foot Studs				10-foot Studs			
				Ground Snow Load (psf)											
Exp. B	Exp. C			20	30	50	70	20	30	50	70	20	30	50	70
85 mph	—	350S162	16	33	33	33	43	33	33	33	43	33	33	33	43
			24	43	43	43	54	33	33	43	54	43	43	43	54
		550S162	16	33	33	33	33	33	33	33	33	33	33	33	33
			24	33	33	43	43	33	33	43	43	33	33	43	43
90 mph	—	350S162	16	33	33	33	43	33	33	33	43	33	33	33	43
			24	43	43	43	54	33	33	43	54	43	43	43	54
		550S162	16	33	33	33	33	33	33	33	33	33	33	33	33
			24	33	33	43	43	33	33	43	43	33	33	43	43
100 mph	85 mph	350S162	16	33	33	33	43	33	33	33	43	33	33	33	43
			24	43	43	43	54	43	43	43	54	43	43	54	54
		550S162	16	33	33	33	33	33	33	33	33	33	33	33	33
			24	33	33	43	43	33	33	43	43	33	33	43	43
110 mph	90 mph	350S162	16	33	33	33	43	33	33	33	43	33	33	43	43
			24	43	43	43	54	43	43	43	54	43	43	54	54
		550S162	16	33	33	33	33	33	33	33	33	33	33	33	33
			24	33	33	43	43	33	33	43	43	33	33	43	43
—	100 mph	350S162	16	33	33	33	43	33	33	33	43	43	43	43	43
			24	43	43	43	54	43	43	43	54	54	54	54	68
		550S162	16	33	33	33	33	33	33	33	33	33	33	33	33
			24	33	33	43	43	33	33	43	43	33	33	43	43
—	110 mph	350S162	16	33	33	43	43	33	33	33	43	43	43	43	43
			24	43	43	54	54	43	43	54	54	54	54	54	68
		550S162	16	33	33	33	33	33	33	33	33	33	33	33	33
			24	33	33	43	43	33	33	43	43	43	43	43	43

For SI: 1 inch = 25.4 mm, 1 foot = 304.8 mm, 1 mil = 0.0254 mm, 1 mile per hour = 0.447 m/s, 1 pound per square foot = 0.0479 kPa, 1 Ksi = 1,000 psi = 6.895 MPa.

a. Deflection criterion: *L*/240.

b. Design load assumptions:
Second floor dead load is 10 psf.
Second floor live load is 30 psf.
Roof/ceiling dead load is 12 psf.
Attic live load is 10 psf.

c. Building width is in the direction of horizontal framing members supported by the wall studs.

TABLE R603.3.2(20)
40-FOOT-WIDE BUILDING SUPPORTING ONE FLOOR, ROOF AND CEILING[a, b, c]
33 KSI STEEL



WIND SPEED		MEMBER SIZE	STUD SPACING (inches)	MINIMUM STUD THICKNESS (mils)											
				8-foot Studs				9-foot Studs				10-foot Studs			
Exp. B	Exp. C			Ground Snow Load (psf)											
				20	30	50	70	20	30	50	70	20	30	50	70
85 mph	—	350S162	16	33	33	43	43	33	33	43	43	43	43	43	54
			24	43	43	54	68	43	43	54	68	54	54	54	68
		550S162	16	33	33	33	43	33	33	33	43	33	33	33	43
			24	43	43	54	54	43	43	43	54	43	43	43	54
90 mph	—	350S162	16	33	33	43	43	33	33	43	43	43	43	43	54
			24	43	43	54	68	43	43	54	68	54	54	54	68
		550S162	16	33	33	33	43	33	33	33	43	33	33	33	43
			24	43	43	54	54	43	43	43	54	43	43	43	54
100 mph	85 mph	350S162	16	33	33	43	43	33	33	43	43	43	43	43	54
			24	43	43	54	68	43	43	54	68	54	54	54	68
		550S162	16	33	33	33	43	33	33	33	43	33	33	33	43
			24	43	43	54	54	43	43	43	54	43	43	43	54
110 mph	90 mph	350S162	16	33	33	43	43	43	43	43	43	43	43	43	54
			24	43	43	54	68	54	54	54	68	54	54	68	68
		550S162	16	33	33	43	43	33	33	33	43	33	33	33	43
			24	43	43	54	54	43	43	43	54	43	43	43	54
—	100 mph	350S162	16	43	43	43	54	43	43	43	54	43	43	54	54
			24	54	54	54	68	54	54	54	68	68	68	68	97
		550S162	16	33	33	43	43	33	33	33	43	33	33	43	43
			24	43	43	54	54	43	43	43	54	43	43	54	54
—	110 mph	350S162	16	43	43	43	54	43	43	43	54	54	54	54	54
			24	54	54	54	68	54	54	68	68	68	68	68	97
		550S162	16	33	33	43	43	33	33	33	43	33	33	43	43
			24	43	43	54	54	43	43	43	54	43	43	54	54

For SI: 1 inch = 25.4 mm, 1 foot = 304.8 mm, 1 mil = 0.0254 mm, 1 mile per hour = 0.447 m/s, 1 pound per square foot = 0.0479 kPa, 1 Ksi = 1,000 psi = 6.895 MPa.

a. Deflection criterion: *L*/240.

b. Design load assumptions:
Second floor dead load is 10 psf.
Second floor live load is 30 psf.
Roof/ceiling dead load is 12 psf.
Attic live load is 10 psf.

c. Building width is in the direction of horizontal framing members supported by the wall studs.

TABLE R603.3.2(21)
40-FOOT-WIDE BUILDING SUPPORTING ONE FLOOR, ROOF AND CEILING[a, b, c]
50 KSI STEEL



WIND SPEED		MEMBER SIZE	STUD SPACING (inches)	MINIMUM STUD THICKNESS (mils)											
				8-foot Studs				9-foot Studs				10-foot Studs			
				Ground Snow Load (psf)											
Exp. B	Exp. C			20	30	50	70	20	30	50	70	20	30	50	70
85 mph	—	350S162	16	33	33	33	43	33	33	33	43	33	33	43	43
			24	43	43	43	54	43	43	43	54	43	43	54	54
		550S162	16	33	33	33	43	33	33	33	33	33	33	33	33
			24	33	43	43	54	33	33	43	43	33	33	43	43
90 mph	—	350S162	16	33	33	33	43	33	33	33	43	33	33	43	43
			24	43	43	43	54	43	43	43	54	43	43	54	54
		550S162	16	33	33	33	43	33	33	33	33	33	33	33	33
			24	33	43	43	54	33	33	43	43	33	33	43	43
100 mph	85 mph	350S162	16	33	33	33	43	33	33	33	43	33	33	43	43
			24	43	43	54	54	43	43	43	54	43	43	54	68
		550S162	16	33	33	33	43	33	33	33	33	33	33	33	33
			24	33	43	43	54	33	33	43	43	33	33	43	43
110 mph	90 mph	350S162	16	33	33	43	43	33	33	33	43	33	33	43	43
			24	43	43	54	54	43	43	43	54	54	54	54	68
		550S162	16	33	33	33	43	33	33	33	33	33	33	33	43
			24	33	43	43	54	33	33	43	43	33	33	43	43
—	100 mph	350S162	16	33	33	43	43	33	33	33	43	43	43	43	43
			24	43	43	54	54	43	43	54	54	54	54	54	68
		550S162	16	33	33	33	43	33	33	33	33	33	33	33	43
			24	33	43	43	54	33	33	43	43	33	43	43	43
—	110 mph	350S162	16	33	33	43	43	33	33	43	43	43	43	43	54
			24	43	43	54	68	54	54	54	54	54	54	54	68
		550S162	16	33	33	33	43	33	33	33	33	33	33	33	43
			24	33	43	43	54	33	33	43	43	43	43	43	54

For SI: 1 inch = 25.4 mm, 1 foot = 304.8 mm, 1 mil = 0.0254 mm, 1 mile per hour = 0.447 m/s, 1 pound per square foot = 0.0479 kPa, 1 Ksi = 1,000 psi = 6.895 MPa.

a. Deflection criterion: *L*/240.

b. Design load assumptions:
Second floor dead load is 10 psf.
Second floor live load is 30 psf.
Roof/ceiling dead load is 12 psf.
Attic live load is 10 psf.

c. Building width is in the direction of horizontal framing members supported by the wall studs.

TABLE R603.3.2(22)
24-FOOT-WIDE BUILDING SUPPORTING TWO FLOORS, ROOF AND CEILING[a, b, c]
33 KSI STEEL



WIND SPEED		MEMBER SIZE	STUD SPACING (inches)	MINIMUM STUD THICKNESS (mils)											
				8-foot Studs				9-foot Studs				10-foot Studs			
Exp. B	Exp. C			Ground Snow Load (psf)											
				20	30	50	70	20	30	50	70	20	30	50	70
85 mph	—	350S162	16	43	43	43	43	33	33	33	43	43	43	43	43
			24	54	54	54	54	43	43	54	54	54	54	54	54
		550S162	16	33	33	43	43	33	33	33	33	33	33	33	43
			24	43	43	54	54	43	43	43	43	43	43	43	54
90 mph	—	350S162	16	43	43	43	43	33	33	33	43	43	43	43	43
			24	54	54	54	54	43	43	54	54	54	54	54	54
		550S162	16	33	33	43	43	33	33	33	33	33	33	33	43
			24	43	43	54	54	43	43	43	43	43	43	43	54
100 mph	85 mph	350S162	16	43	43	43	43	33	33	33	43	43	43	43	43
			24	54	54	54	54	54	54	54	54	54	54	54	68
		550S162	16	33	33	43	43	33	33	33	33	33	33	33	43
			24	43	43	54	54	43	43	43	43	43	43	43	54
110 mph	90 mph	350S162	16	43	43	43	43	43	43	43	43	43	43	43	43
			24	54	54	54	54	54	54	54	54	54	54	68	68
		550S162	16	33	33	43	43	33	33	33	33	33	33	33	43
			24	43	43	54	54	43	43	43	43	43	43	43	54
—	100 mph	350S162	16	43	43	43	43	43	43	43	43	43	43	43	54
			24	54	54	54	54	54	54	54	54	68	68	68	68
		550S162	16	33	33	43	43	33	33	33	33	33	33	33	43
			24	43	43	54	54	43	43	43	43	43	43	43	54
—	110 mph	350S162	16	43	43	43	43	43	43	43	43	54	54	54	54
			24	54	54	54	68	54	54	68	68	68	68	68	97
		550S162	16	33	33	43	43	33	33	33	33	33	33	33	43
			24	43	43	54	54	43	43	43	43	43	43	43	54

For SI: 1 inch = 25.4 mm, 1 foot = 304.8 mm, 1 mil = 0.0254 mm, 1 mile per hour = 0.447 m/s, 1 pound per square foot = 0.0479 kPa, 1 Ksi = 1,000 psi = 6.895 MPa.

a. Deflection criterion: *L*/240.

b. Design load assumptions:
Top and middle floor dead load is 10 psf.
Top floor live load is 30 psf.
Middle floor live load is 40 psf.
Roof/ceiling dead load is 12 psf.
Attic live load is 10 psf.

c. Building width is in the direction of horizontal framing members supported by the wall studs.

TABLE R603.3.2(23)
24-FOOT-WIDE BUILDING SUPPORTING TWO FLOORS, ROOF AND CEILING[a, b, c]
33 KSI STEEL



WIND SPEED		MEMBER SIZE	STUD SPACING (inches)	MINIMUM STUD THICKNESS (mils)											
				8-foot Studs				9-foot Studs				10-foot Studs			
Exp. B	Exp. C			Ground Snow Load (psf)											
				20	30	50	70	20	30	50	70	20	30	50	70
85 mph	—	350S162	16	33	33	33	43	33	33	33	33	33	33	33	33
			24	43	43	54	54	43	43	43	43	43	43	43	54
		550S162	16	33	33	33	33	33	33	33	33	33	33	33	33
			24	43	43	43	43	43	43	43	43	43	43	43	43
90 mph	—	350S162	16	33	33	33	43	33	33	33	33	33	33	33	33
			24	43	43	54	54	43	43	43	43	43	43	43	54
		550S162	16	33	33	33	33	33	33	33	33	33	33	33	33
			24	43	43	43	43	43	43	43	43	43	43	43	43
100 mph	85 mph	350S162	16	33	33	33	43	33	33	33	33	33	33	33	33
			24	43	43	54	54	43	43	43	43	43	43	54	54
		550S162	16	33	33	33	33	33	33	33	33	33	33	33	33
			24	43	43	43	43	43	43	43	43	43	43	43	43
110 mph	90 mph	350S162	16	33	33	33	43	33	33	33	33	33	33	43	43
			24	43	43	54	54	43	43	43	43	54	54	54	54
		550S162	16	33	33	33	33	33	33	33	33	33	33	33	33
			24	43	43	43	43	43	43	43	43	43	43	43	43
—	100 mph	350S162	16	33	33	33	43	33	33	33	33	43	43	43	43
			24	43	43	54	54	43	43	54	54	54	54	54	54
		550S162	16	33	33	33	33	33	33	33	33	33	33	33	33
			24	43	43	43	43	43	43	43	43	43	43	43	43
—	110 mph	350S162	16	33	33	33	43	33	33	33	43	43	43	43	43
			24	54	54	54	54	54	54	54	54	54	54	54	68
		550S162	16	33	33	33	33	33	33	33	33	33	33	33	33
			24	43	43	43	43	43	43	43	43	43	43	43	43

For SI: 1 inch = 25.4 mm, 1 foot = 304.8 mm, 1 mil = 0.0254 mm, 1 mile per hour = 0.447 m/s, 1 pound per square foot = 0.0479 kPa, 1 Ksi = 1,000 psi = 6.895 MPa.

a. Deflection criterion: *L*/240.

b. Design load assumptions:
Top and middle floor dead load is 10 psf.
Top floor live load is 30 psf.
Middle floor live load is 40 psf.
Attic live load is 10 psf.

c. Building width is in the direction of horizontal framing members supported by the wall studs.

TABLE R603.3.2(24)
28-FOOT-WIDE BUILDING SUPPORTING TWO FLOORS, ROOF AND CEILING[a, b, c]
33 KSI STEEL



WIND SPEED		MEMBER SIZE	STUD SPACING (inches)	MINIMUM STUD THICKNESS (mils)											
				8-foot Studs				9-foot Studs				10-foot Studs			
Exp. B	Exp. C			Ground Snow Load (psf)											
				20	30	50	70	20	30	50	70	20	30	50	70
85 mph	—	350S162	16	43	43	43	43	43	43	43	43	43	43	43	43
			24	54	54	54	68	54	54	54	54	54	54	54	68
		550S162	16	43	43	43	43	43	43	43	43	43	43	43	43
			24	54	54	54	54	54	54	54	54	54	54	54	54
90 mph	—	350S162	16	43	43	43	43	43	43	43	43	43	43	43	43
			24	54	54	54	68	54	54	54	54	54	54	54	68
		550S162	16	43	43	43	43	43	43	43	43	43	43	43	43
			24	54	54	54	54	54	54	54	54	54	54	54	54
100 mph	85 mph	350S162	16	43	43	43	43	43	43	43	43	43	43	43	43
			24	54	54	54	68	54	54	54	54	54	54	68	68
		550S162	16	43	43	43	43	43	43	43	43	43	43	43	43
			24	54	54	54	54	54	54	54	54	54	54	54	54
110 mph	90 mph	350S162	16	43	43	43	43	43	43	43	43	43	43	43	43
			24	54	54	54	68	54	54	54	54	68	68	68	68
		550S162	16	43	43	43	43	43	43	43	43	43	43	43	43
			24	54	54	54	54	54	54	54	54	54	54	54	54
—	100 mph	350S162	16	43	43	43	43	43	43	43	43	43	43	54	54
			24	54	54	54	68	54	54	68	68	68	68	68	97
		550S162	16	43	43	43	43	43	43	43	43	43	43	43	43
			24	54	54	54	54	54	54	54	54	54	54	54	54
—	110 mph	350S162	16	43	43	43	43	43	43	43	43	54	54	54	54
			24	54	68	68	68	68	68	68	68	68	68	97	97
		550S162	16	43	43	43	43	43	43	43	43	43	43	43	43
			24	54	54	54	54	54	54	54	54	54	54	54	54

For SI: 1 inch = 25.4 mm, 1 foot = 304.8 mm, 1 mil = 0.0254 mm, 1 mile per hour = 0.447 m/s, 1 pound per square foot = 0.0479 kPa, 1 Ksi = 1,000 psi = 6.895 MPa.

a. Deflection criterion: *L*/240.

b. Design load assumptions:
Top and middle floor dead load is 10 psf.
Top floor live load is 30 psf.
Middle floor live load is 40 psf.
Roof/ceiling dead load is 12 psf.
Attic live load is 10 psf.

c. Building width is in the direction of horizontal framing members supported by the wall studs.

TABLE R603.3.2(25)
28-FOOT-WIDE BUILDING SUPPORTING TWO FLOORS, ROOF AND CEILING[a, b, c]
50 KSI STEEL



WIND SPEED		MEMBER SIZE	STUD SPACING (inches)	MINIMUM STUD THICKNESS (mils)											
				8-foot Studs				9-foot Studs				10-foot Studs			
				Ground Snow Load (psf)											
Exp. B	Exp. C			20	30	50	70	20	30	50	70	20	30	50	70
85 mph	—	350S162	16	43	43	43	43	33	33	33	43	43	43	43	43
			24	54	54	54	54	43	43	54	54	54	54	54	54
		550S162	16	33	33	33	43	33	33	33	33	33	33	33	33
			24	43	43	43	54	43	43	43	43	43	43	43	43
90 mph	—	350S162	16	43	43	43	43	33	33	33	43	43	43	43	43
			24	54	54	54	54	43	43	54	54	54	54	54	54
		550S162	16	33	33	33	43	33	33	33	33	33	33	33	33
			24	43	43	43	54	43	43	43	43	43	43	43	43
100 mph	85 mph	350S162	16	43	43	43	43	33	33	33	43	43	43	43	43
			24	54	54	54	54	43	43	54	54	54	54	54	54
		550S162	16	33	33	33	43	33	33	33	33	33	33	33	33
			24	43	43	43	54	43	43	43	43	43	43	43	43
110 mph	90 mph	350S162	16	43	43	43	43	33	33	33	43	43	43	43	43
			24	54	54	54	54	43	43	54	54	54	54	54	54
		550S162	16	33	33	33	43	33	33	33	33	33	33	33	33
			24	43	43	43	54	43	43	43	43	43	43	43	43
—	100 mph	350S162	16	43	43	43	43	33	33	33	43	43	43	43	43
			24	54	54	54	54	54	54	54	54	54	54	54	68
		550S162	16	33	33	33	43	33	33	33	33	33	33	33	33
			24	43	43	43	54	43	43	43	43	43	43	43	43
—	110 mph	350S162	16	43	43	43	43	43	43	43	43	43	43	43	43
			24	54	54	54	54	54	54	54	54	68	68	68	68
		550S162	16	33	33	33	43	33	33	33	33	33	33	33	33
			24	43	43	43	54	43	43	43	43	43	43	43	43

For SI: 1 inch = 25.4 mm, 1 foot = 304.8 mm, 1 mil = 0.0254 mm, 1 mile per hour = 0.447 m/s, 1 pound per square foot = 0.0479 kPa, 1 Ksi = 1,000 psi = 6.895 MPa.

a. Deflection criterion: *L*/240.

b. Design load assumptions:
Top and middle floor dead load is 10 psf.
Top floor live load is 30 psf.
Middle floor live load is 40 psf.
Roof/ceiling dead load is 12 psf.
Attic live load is 10 psf.

c. Building width is in the direction of horizontal framing members supported by the wall studs.

TABLE R603.3.2(26)
32-FOOT-WIDE BUILDING SUPPORTING TWO FLOORS, ROOF AND CEILING[a, b, c]
33 KSI STEEL



WIND SPEED		MEMBER SIZE	STUD SPACING (inches)	MINIMUM STUD THICKNESS (mils)											
				8-foot Studs				9-foot Studs				10-foot Studs			
Exp. B	Exp. C			Ground Snow Load (psf)											
				20	30	50	70	20	30	50	70	20	30	50	70
85 mph	—	350S162	16	43	43	43	54	43	43	43	43	43	43	43	54
			24	68	68	68	68	54	54	68	68	68	68	68	68
		550S162	16	43	43	43	43	43	43	43	43	43	43	43	43
			24	54	54	54	68	54	54	54	54	54	54	54	54
90 mph	—	350S162	16	43	43	43	54	43	43	43	43	43	43	43	54
			24	68	68	68	68	54	54	68	68	68	68	68	68
		550S162	16	43	43	43	43	43	43	43	43	43	43	43	43
			24	54	54	54	68	54	54	54	54	54	54	54	54
100 mph	85 mph	350S162	16	43	43	43	54	43	43	43	43	43	43	43	54
			24	68	68	68	68	54	54	68	68	68	68	68	68
		550S162	16	43	43	43	43	43	43	43	43	43	43	43	43
			24	54	54	54	68	54	54	54	54	54	54	54	54
110 mph	90 mph	350S162	16	43	43	43	54	43	43	43	43	43	43	54	54
			24	68	68	68	68	54	54	68	68	68	68	68	68
		550S162	16	43	43	43	43	43	43	43	43	43	43	43	43
			24	54	54	54	68	54	54	54	54	54	54	54	54
—	100 mph	350S162	16	43	43	43	54	43	43	43	43	54	54	54	54
			24	68	68	68	68	68	68	68	68	68	68	97	97
		550S162	16	43	43	43	43	43	43	43	43	43	43	43	43
			24	54	54	54	68	54	54	54	54	54	54	54	54
—	110 mph	350S162	16	43	43	43	54	43	43	54	54	54	54	54	54
			24	68	68	68	68	68	68	68	68	97	97	97	97
		550S162	16	43	43	43	43	43	43	43	43	43	43	43	43
			24	54	54	54	68	54	54	54	54	54	54	54	54

For SI: 1 inch = 25.4 mm, 1 foot = 304.8 mm, 1 mil = 0.0254 mm, 1 mile per hour = 0.447 m/s, 1 pound per square foot = 0.0479 kPa, 1 Ksi = 1,000 psi = 6.895 MPa.

a. Deflection criterion: *L*/240.

b. Design load assumptions:
Top and middle floor dead load is 10 psf.
Top floor live load is 30 psf.
Middle floor live load is 40 psf.
Roof/ceiling dead load is 12 psf.
Attic live load is 10 psf.

c. Building width is in the direction of horizontal framing members supported by the wall studs.

TABLE R603.3.2(27)
32-FOOT-WIDE BUILDING SUPPORTING TWO FLOORS, ROOF AND CEILING[a, b, c]
50 KSI STEEL



WIND SPEED		MEMBER SIZE	STUD SPACING (inches)	MINIMUM STUD THICKNESS (mils)											
				8-foot Studs				9-foot Studs				10-foot Studs			
				Ground Snow Load (psf)											
Exp. B	Exp. C			20	30	50	70	20	30	50	70	20	30	50	70
85 mph	—	350S162	16	43	43	43	43	43	43	43	43	43	43	43	43
			24	54	54	54	68	54	54	54	54	54	54	54	68
		550S162	16	43	43	43	43	33	33	33	43	33	33	43	43
			24	54	54	54	54	43	43	43	54	43	43	54	54
90 mph	—	350S162	16	43	43	43	43	43	43	43	43	43	43	43	43
			24	54	54	54	68	54	54	54	54	54	54	54	68
		550S162	16	43	43	43	43	33	33	33	43	33	33	43	43
			24	54	54	54	54	43	43	43	54	43	43	54	54
100 mph	85 mph	350S162	16	43	43	43	43	43	43	43	43	43	43	43	43
			24	54	54	54	68	54	54	54	54	54	54	54	68
		550S162	16	43	43	43	43	33	33	33	43	33	33	43	43
			24	54	54	54	54	43	43	43	54	43	43	54	54
110 mph	90 mph	350S162	16	43	43	43	43	43	43	43	43	43	43	43	43
			24	54	54	54	68	54	54	54	54	54	54	54	68
		550S162	16	43	43	43	43	33	33	33	43	33	33	43	43
			24	54	54	54	54	43	43	43	54	43	43	54	54
—	100 mph	350S162	16	43	43	43	43	43	43	43	43	43	43	43	43
			24	54	54	54	68	54	54	54	54	68	68	68	68
		550S162	16	43	43	43	43	33	33	33	43	33	33	43	43
			24	54	54	54	54	43	43	43	54	43	43	54	54
—	110 mph	350S162	16	43	43	43	43	43	43	43	43	43	43	43	54
			24	54	54	54	68	54	54	54	54	68	68	68	68
		550S162	16	43	43	43	43	33	33	33	43	33	33	43	43
			24	54	54	54	54	43	43	43	54	43	43	54	54

For SI: 1 inch = 25.4 mm, 1 foot = 304.8 mm, 1 mil = 0.0254 mm, 1 mile per hour = 0.447 m/s, 1 pound per square foot = 0.0479 kPa, 1 Ksi = 1,000 psi = 6.895 MPa.

a. Deflection criterion: *L*/240.

b. Design load assumptions:
Top and middle floor dead load is 10 psf.
Top floor live load is 30 psf.
Middle floor live load is 40 psf.
Roof/ceiling dead load is 12 psf.
Attic live load is 10 psf.

c. Building width is in the direction of horizontal framing members supported by the wall studs.

TABLE R603.3.2(28)
36-FOOT-WIDE BUILDING SUPPORTING TWO FLOORS, ROOF AND CEILING[a, b, c]
33 KSI STEEL



WIND SPEED		MEMBER SIZE	STUD SPACING (inches)	MINIMUM STUD THICKNESS (mils)											
				8-foot Studs				9-foot Studs				10-foot Studs			
Exp. B	Exp. C			Ground Snow Load (psf)											
				20	30	50	70	20	30	50	70	20	30	50	70
85 mph	—	350S162	16	54	54	54	54	43	43	43	54	54	54	54	54
			24	68	68	68	97	68	68	68	68	68	68	68	97
		550S162	16	43	43	43	54	43	43	43	43	43	43	43	43
			24	68	68	68	68	54	54	54	68	54	54	68	68
90 mph	—	350S162	16	54	54	54	54	43	43	43	54	54	54	54	54
			24	68	68	68	97	68	68	68	68	68	68	68	97
		550S162	16	43	43	43	54	43	43	43	43	43	43	43	43
			24	68	68	68	68	54	54	54	68	54	54	68	68
100 mph	85 mph	350S162	16	54	54	54	54	43	43	43	54	54	54	54	54
			24	68	68	68	97	68	68	68	68	68	68	68	97
		550S162	16	43	43	43	54	43	43	43	43	43	43	43	43
			24	68	68	68	68	54	54	54	68	54	54	68	68
110 mph	90 mph	350S162	16	54	54	54	54	43	43	43	54	54	54	54	54
			24	68	68	68	97	68	68	68	68	68	68	97	97
		550S162	16	43	43	43	54	43	43	43	43	43	43	43	43
			24	68	68	68	68	54	54	54	68	54	54	68	68
—	100 mph	350S162	16	54	54	54	54	43	43	54	54	54	54	54	54
			24	68	68	68	97	68	68	68	68	97	97	97	97
		550S162	16	43	43	43	54	43	43	43	43	43	43	43	43
			24	68	68	68	68	54	54	54	68	54	54	68	68
—	110 mph	350S162	16	54	54	54	54	54	54	54	54	54	54	54	68
			24	68	68	68	97	68	68	68	97	97	97	97	97
		550S162	16	43	43	43	54	43	43	43	43	43	43	43	43
			24	68	68	68	68	54	54	54	68	54	54	68	68

For SI: 1 inch = 25.4 mm, 1 foot = 304.8 mm, 1 mil = 0.0254 mm, 1 mile per hour = 0.447 m/s, 1 pound per square foot = 0.0479 kPa, 1 Ksi = 1,000 psi = 6.895 MPa.

a. Deflection criterion: $L/240$.

b. Design load assumptions:
Top and middle floor dead load is 10 psf.
Top floor live load is 30 psf.
Middle floor live load is 40 psf.
Roof/ceiling dead load is 12 psf.
Attic live load is 10 psf.

c. Building width is in the direction of horizontal framing members supported by the wall studs.

TABLE R603.3.2(29)
36-FOOT-WIDE BUILDING SUPPORTING TWO FLOORS, ROOF AND CEILING[a, b, c]
50 KSI STEEL



WIND SPEED		MEMBER SIZE	STUD SPACING (inches)	MINIMUM STUD THICKNESS (mils)											
				8-foot Studs				9-foot Studs				10-foot Studs			
Exp. B	Exp. C			Ground Snow Load (psf)											
				20	30	50	70	20	30	50	70	20	30	50	70
85 mph	—	350S162	16	43	43	43	54	43	43	43	43	43	43	43	43
			24	68	68	68	68	54	54	54	68	68	68	68	68
		550S162	16	43	43	43	43	43	43	43	43	43	43	43	43
			24	54	54	54	54	54	54	54	54	54	54	54	54
90 mph	—	350S162	16	43	43	43	54	43	43	43	43	43	43	43	43
			24	68	68	68	68	54	54	54	68	68	68	68	68
		550S162	16	43	43	43	43	43	43	43	43	43	43	43	43
			24	54	54	54	54	54	54	54	54	54	54	54	54
100 mph	85 mph	350S162	16	43	43	43	54	43	43	43	43	43	43	43	43
			24	68	68	68	68	54	54	54	68	68	68	68	68
		550S162	16	43	43	43	43	43	43	43	43	43	43	43	43
			24	54	54	54	54	54	54	54	54	54	54	54	54
110 mph	90 mph	350S162	16	43	43	43	54	43	43	43	43	43	43	43	43
			24	68	68	68	68	54	54	54	68	68	68	68	68
		550S162	16	43	43	43	43	43	43	43	43	43	43	43	43
			24	54	54	54	54	54	54	54	54	54	54	54	54
—	100 mph	350S162	16	43	43	43	54	43	43	43	43	43	43	43	54
			24	68	68	68	68	54	54	54	68	68	68	68	68
		550S162	16	43	43	43	43	43	43	43	43	43	43	43	43
			24	54	54	54	54	54	54	54	54	54	54	54	54
—	110 mph	350S162	16	43	43	43	54	43	43	43	43	43	54	54	54
			24	68	68	68	68	54	54	68	68	68	68	68	68
		550S162	16	43	43	43	43	43	43	43	43	43	43	43	43
			24	54	54	54	54	54	54	54	54	54	54	54	54

For SI: 1 inch = 25.4 mm, 1 foot = 304.8 mm, 1 mil = 0.0254 mm, 1 mile per hour = 0.447 m/s, 1 pound per square foot = 0.0479 kPa, 1 Ksi = 1,000 psi = 6.895 MPa.

a. Deflection criterion: *L*/240.

b. Design load assumptions:
Top and middle floor dead load is 10 psf.
Top floor live load is 30 psf.
Middle floor live load is 40 psf.
Roof/ceiling dead load is 12 psf.
Attic live load is 10 psf.

c. Building width is in the direction of horizontal framing members supported by the wall studs.

TABLE R603.3.2(30)
40-FOOT-WIDE BUILDING SUPPORTING TWO FLOORS, ROOF AND CEILING[a, b, c]
33 KSI STEEL



WIND SPEED		MEMBER SIZE	STUD SPACING (inches)	MINIMUM STUD THICKNESS (mils)											
				8-foot Studs				9-foot Studs				10-foot Studs			
				Ground Snow Load (psf)											
Exp. B	Exp. C			20	30	50	70	20	30	50	70	20	30	50	70
85 mph	—	350S162	16	54	54	54	54	54	54	54	54	54	54	54	54
			24	97	97	97	97	68	68	68	97	97	97	97	97
		550S162	16	54	54	54	54	43	43	54	54	43	43	54	54
			24	68	68	68	68	68	68	68	68	68	68	68	68
90 mph	—	350S162	16	54	54	54	54	54	54	54	54	54	54	54	54
			24	97	97	97	97	68	68	68	97	97	97	97	97
		550S162	16	54	54	54	54	43	43	54	54	43	43	54	54
			24	68	68	68	68	68	68	68	68	68	68	68	68
100 mph	85 mph	350S162	16	54	54	54	54	54	54	54	54	54	54	54	54
			24	97	97	97	97	68	68	68	97	97	97	97	97
		550S162	16	54	54	54	54	43	43	54	54	43	43	54	54
			24	68	68	68	68	68	68	68	68	68	68	68	68
110 mph	90 mph	350S162	16	54	54	54	54	54	54	54	54	54	54	54	54
			24	97	97	97	97	68	68	68	97	97	97	97	97
		550S162	16	54	54	54	54	43	43	54	54	43	43	54	54
			24	68	68	68	68	68	68	68	68	68	68	68	68
—	100 mph	350S162	16	54	54	54	54	54	54	54	54	54	54	54	54
			24	97	97	97	97	68	68	68	97	97	97	97	97
		550S162	16	54	54	54	54	43	43	54	54	43	43	54	54
			24	68	68	68	68	68	68	68	68	68	68	68	68
—	110 mph	350S162	16	54	54	54	54	54	54	54	54	54	54	68	68
			24	97	97	97	97	68	68	97	97	97	97	97	97
		550S162	16	54	54	54	54	43	43	54	54	43	43	54	54
			24	68	68	68	68	68	68	68	68	68	68	68	68

For SI: 1 inch = 25.4 mm, 1 foot = 304.8 mm, 1 mil = 0.0254 mm, 1 mile per hour = 0.447 m/s, 1 pound per square foot = 0.0479 kPa, 1 Ksi = 1,000 psi = 6.895 MPa.

a. Deflection criterion: *L*/240.

b. Design load assumptions:
- Top and middle floor dead load is 10 psf.
- Top floor live load is 30 psf.
- Middle floor live load is 40 psf.
- Roof/ceiling dead load is 12 psf.
- Attic live load is 10 psf.

c. Building width is in the direction of horizontal framing members supported by the wall studs.

TABLE R603.3.2(31)
40-FOOT-WIDE BUILDING SUPPORTING TWO FLOORS, ROOF AND CEILING[a, b, c]
50 KSI STEEL



WIND SPEED		MEMBER SIZE	STUD SPACING (inches)	MINIMUM STUD THICKNESS (mils)											
				8-foot Studs				9-foot Studs				10-foot Studs			
				Ground Snow Load (psf)											
Exp. B	Exp. C			20	30	50	70	20	30	50	70	20	30	50	70
85 mph	—	350S162	16	54	54	54	54	43	43	43	43	43	54	54	54
			24	68	68	68	68	68	68	68	68	68	68	68	68
		550S162	16	43	43	43	43	43	43	43	43	43	43	43	43
			24	54	54	54	68	54	54	54	54	54	54	54	54
90 mph	—	350S162	16	54	54	54	54	43	43	43	43	43	54	54	54
			24	68	68	68	68	68	68	68	68	68	68	68	68
		550S162	16	43	43	43	43	43	43	43	43	43	43	43	43
			24	54	54	54	68	54	54	54	54	54	54	54	54
100 mph	85 mph	350S162	16	54	54	54	54	43	43	43	43	43	54	54	54
			24	68	68	68	68	68	68	68	68	68	68	68	68
		550S162	16	43	43	43	43	43	43	43	43	43	43	43	43
			24	54	54	54	68	54	54	54	54	54	54	54	54
110 mph	90 mph	350S162	16	54	54	54	54	43	43	43	43	43	54	54	54
			24	68	68	68	68	68	68	68	68	68	68	68	68
		550S162	16	43	43	43	43	43	43	43	43	43	43	43	43
			24	54	54	54	68	54	54	54	54	54	54	54	54
—	100 mph	350S162	16	54	54	54	54	43	43	43	43	43	54	54	54
			24	68	68	68	68	68	68	68	68	68	68	68	68
		550S162	16	43	43	43	43	43	43	43	43	43	43	43	43
			24	54	54	54	68	54	54	54	54	54	54	54	54
—	110 mph	350S162	16	54	54	54	54	43	43	43	43	54	54	54	54
			24	68	68	68	68	68	68	68	68	68	68	68	97
		550S162	16	43	43	43	43	43	43	43	43	43	43	43	43
			24	54	54	54	68	54	54	54	54	54	54	54	54

For SI: 1 inch = 25.4 mm, 1 foot = 304.8 mm, 1 mil = 0.0254 mm, 1 mile per hour = 0.447 m/s, 1 pound per square foot = 0.0479 kPa, 1 Ksi = 1,000 psi = 6.895 MPa.

a. Deflection criterion: *L*/240.

b. Design load assumptions:
Top and middle floor dead load is 10 psf.
Top floor live load is 30 psf.
Middle floor live load is 40 psf.
Roof/ceiling dead load is 12 psf.
Attic live load is 10 psf.

c. Building width is in the direction of horizontal framing members supported by the wall studs.

TABLE R603.3.2.1(1)
ALL BUILDING WIDTHS GABLE ENDWALLS 8, 9 OR 10 FEET IN HEIGHT[a, b, c]
33 KSI STEEL

WIND SPEED		MEMBER SIZE	STUD SPACING (inches)	MINIMUM STUD THICKNESS (Mils)		
Exp. B	Exp. C			8-foot Studs	9-foot Studs	10-foot Studs
85 mph	—	350S162	16	33	33	33
			24	33	33	33
		550S162	16	33	33	33
			24	33	33	33
90 mph	—	350S162	16	33	33	33
			24	33	33	33
		550S162	16	33	33	33
			24	33	33	33
100 mph	85 mph	350S162	16	33	33	33
			24	33	33	43
		550S162	16	33	33	33
			24	33	33	33
110 mph	90 mph	350S162	16	33	33	33
			24	33	33	43
		550S162	16	33	33	33
			24	33	33	33
—	100 mph	350S162	16	33	33	43
			24	43	43	54
		550S162	16	33	33	33
			24	33	33	33
—	110 mph	350S162	16	33	43	43
			24	43	54	54
		550S162	16	33	33	33
			24	33	33	43

For SI: 1 inch = 25.4 mm, 1 foot = 304.8 mm, 1 mil = 0.0254 mm, 1 mile per hour = 0.447 m/s, 1 pound per square foot = 0.0479 kPa, 1 Ksi = 1,000 psi = 6.895 MPa.

a. Deflection criterion *L*/240.

b. Design load assumptions:
Ground snow load is 70 psf.
Roof/ceiling dead load is 12 psf.
Floor dead load is 10 psf.
Floor live load is 40 psf.
Attic dead load is 10 psf.

c. Building width is in the direction of horizontal framing members supported by the wall studs.

TABLE R603.3.2.1(2)
ALL BUILDING WIDTHS GABLE ENDWALLS 8, 9 OR 10 FEET IN HEIGHT[a, b, c]
50 KSI STEEL

WIND SPEED		MEMBER SIZE	STUD SPACING (inches)	MINIMUM STUD THICKNESS (Mils)		
Exp. B	Exp. C			8-foot Studs	9-foot Studs	10-foot Studs
85 mph	—	350S162	16	33	33	33
			24	33	33	33
		550S162	16	33	33	33
			24	33	33	33
90 mph	—	350S162	16	33	33	33
			24	33	33	33
		550S162	16	33	33	33
			24	33	33	33
100 mph	85 mph	350S162	16	33	33	33
			24	33	33	33
		550S162	16	33	33	33
			24	33	33	33
110 mph	90 mph	350S162	16	33	33	33
			24	33	33	43
		550S162	16	33	33	33
			24	33	33	33
—	100 mph	350S162	16	33	33	33
			24	33	33	43
		550S162	16	33	33	33
			24	33	33	33
—	110 mph	350S162	16	33	33	33
			24	33	43	54
		550S162	16	33	33	33
			24	33	33	33

For SI: 1 inch = 25.4 mm, 1 foot = 304.8 mm, 1 mil = 0.0254 mm, 1 mile per hour = 0.447 m/s, 1 pound per square foot = 0.0479 kPa, 1 Ksi = 1,000 psi = 6.895 MPa.

a. Deflection criterion *L*/240.

b. Design load assumptions:
Ground snow load is 70 psf.
Roof/ceiling dead load is 12 psf.
Floor dead load is 10 psf.
Floor live load is 40 psf.
Attic dead load is 10 psf.

c. Building width is in the direction of horizontal framing members supported by the wall studs.

TABLE R603.3.2.1(3)
ALL BUILDING WIDTHS GABLE ENDWALLS OVER 10 FEET IN HEIGHT[a, b, c]
33 KSI STEEL

WIND SPEED		MEMBER SIZE	STUD SPACING (inches)	MINIMUM STUD THICKNESS (mils)					
				Stud Height, *h* (feet)					
Exp. B	Exp. C			$10 < h \leq 12$	$12 < h \leq 14$	$14 < h \leq 16$	$16 < h \leq 18$	$18 < h \leq 20$	$20 < h \leq 22$
85 mph	—	350S162	16	33	43	54	97	—	—
			24	43	54	97	—	—	—
		550S162	16	33	33	33	43	43	54
			24	33	33	43	54	68	97
90 mph	—	350S162	16	33	43	68	97	—	—
			24	43	68	97	—	—	—
		550S162	16	33	33	33	43	54	54
			24	33	33	43	54	68	97
100 mph	85 mph	350S162	16	43	54	97	—	—	—
			24	54	97	—	—	—	—
		550S162	16	33	33	43	54	54	68
			24	33	43	54	68	97	97
110 mph	90 mph	350S162	16	43	68	—	—	—	—
			24	68	—	—	—	—	—
		550S162	16	33	43	43	54	68	97
			24	43	54	68	97	97	—
—	100 mph	350S162	16	54	97	—	—	—	—
			24	97	—	—	—	—	—
		550S162	16	33	43	54	68	97	—
			24	43	68	97	97	—	—
—	110 mph	350S162	16	68	97	—	—	—	—
			24	97	—	—	—	—	—
		550S162	16	43	54	68	97	97	—
			24	54	68	97	—	—	—

For SI: 1 inch = 25.4 mm, 1 foot = 304.8 mm, 1 mil = 0.0254 mm, 1 mile per hour = 0.447 m/s, 1 pound per square foot = 0.0479 kPa, 1 Ksi = 1,000 psi = 6.895 MPa.

a. Deflection criterion *L*/240.

b. Design load assumptions:
Ground snow load is 70 psf.
Roof/ceiling dead load is 12 psf.
Floor dead load is 10 psf.
Floor live load is 40 psf.
Attic dead load is 10 psf.

c. Building width is in the direction of horizontal framing members supported by the wall studs.

TABLE R603.3.2.1(4)
ALL BUILDING WIDTHS GABLE ENDWALLS OVER 10 FEET IN HEIGHT[a, b, c]
50 KSI STEEL

WIND SPEED		MEMBER SIZE	STUD SPACING (inches)	MINIMUM STUD THICKNESS (mils)					
				Stud Height, *h* (feet)					
Exp. B	Exp. C			$10 < h \leq 12$	$12 < h \leq 14$	$14 < h \leq 16$	$16 < h \leq 18$	$18 < h \leq 20$	$20 < h \leq 22$
85 mph	—	350S162	16	33	43	54	97	—	—
			24	33	54	97	—	—	—
		550S162	16	33	33	33	33	43	54
			24	33	33	33	43	54	97
90 mph	—	350S162	16	33	43	68	97	—	—
			24	43	68	97	—	—	—
		550S162	16	33	33	33	33	43	54
			24	33	33	43	43	68	97
100 mph	85 mph	350S162	16	33	54	97	—	—	—
			24	54	97	—	—	—	—
		550S162	16	33	33	33	43	54	68
			24	33	33	43	54	97	97
110 mph	90 mph	350S162	16	43	68	—	—	—	—
			24	68	—	—	—	—	—
		550S162	16	33	33	43	43	68	97
			24	33	43	54	68	97	—
—	100 mph	350S162	16	54	97	—	—	—	—
			24	97	—	—	—	—	—
		550S162	16	33	33	43	54	97	—
			24	43	54	54	97	—	—
—	110 mph	350S162	16	54	97	—	—	—	—
			24	97	—	—	—	—	—
		550S162	16	33	43	54	68	97	—
			24	43	54	68	97	—	—

For SI: 1 inch = 25.4 mm, 1 foot = 304.8 mm, 1 mil = 0.0254 mm, 1 mile per hour = 0.447 m/s, 1 pound per square foot = 0.0479 kPa, 1 Ksi = 1,000 psi = 6.895 MPa.

a. Deflection criterion *L*/240.

b. Design load assumptions:
Ground snow load is 70 psf.
Roof/ceiling dead load is 12 psf.
Floor dead load is 10 psf.
Floor live load is 40 psf.
Attic dead load is 10 psf.

c. Building width is in the direction of horizontal framing members supported by the wall studs.

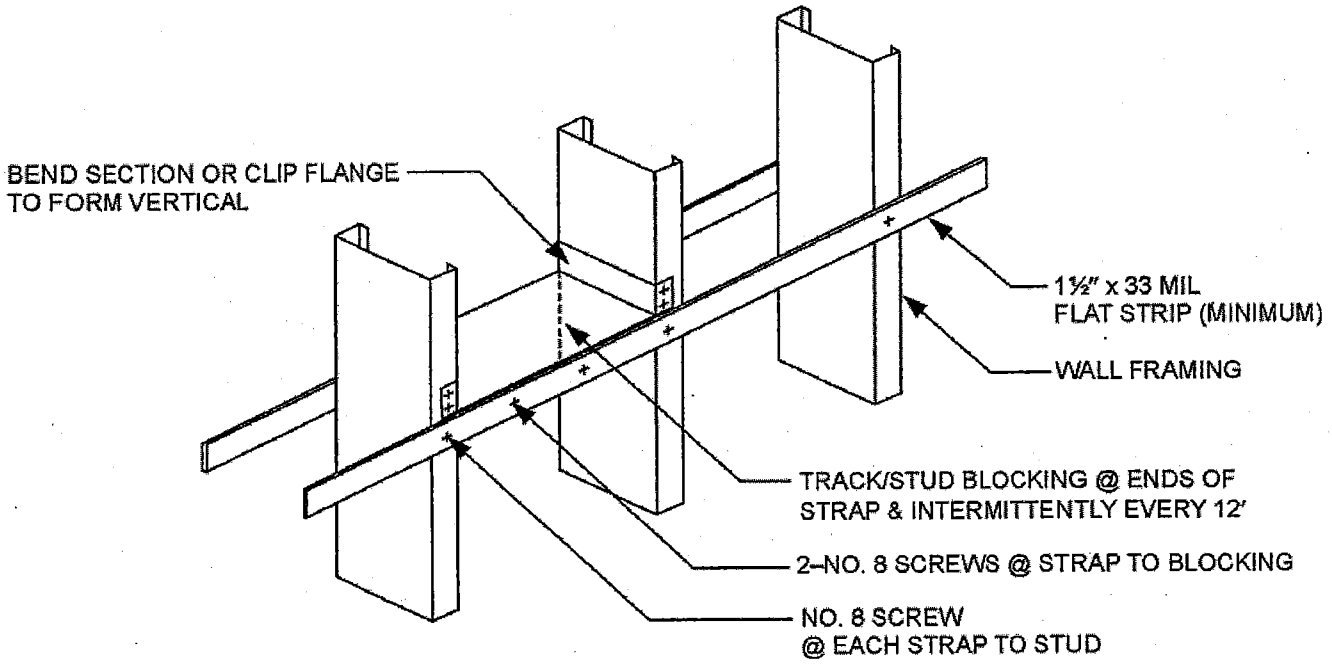

For SI: 1 mil = 0.0254 mm, 1 inch = 25.4 mm, 1 foot = 304.8 mm.

FIGURE R603.3.3(1)
STUD BRACING WITH STRAPPING ONLY

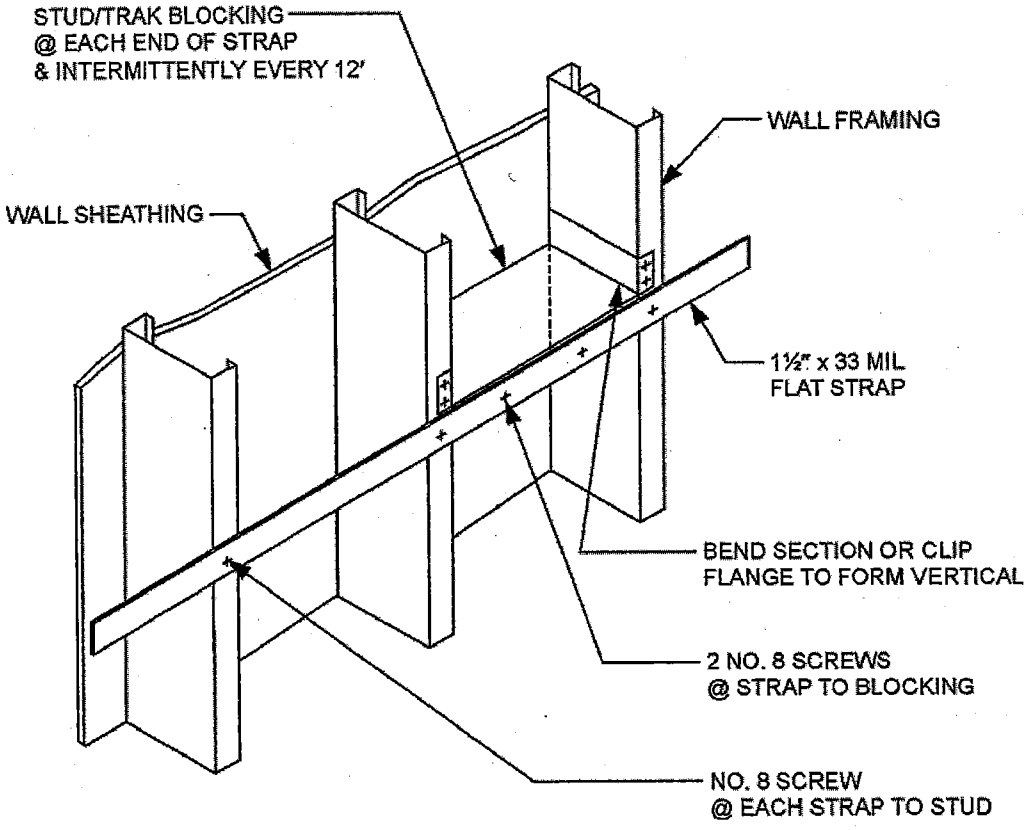

For SI: 1 mil = 0.0254 mm, 1 inch = 25.4 mm, 1 foot = 304.8 mm.

FIGURE R603.3.3(2)
STUD BRACING WITH STRAPPING AND SHEATHING MATERIAL

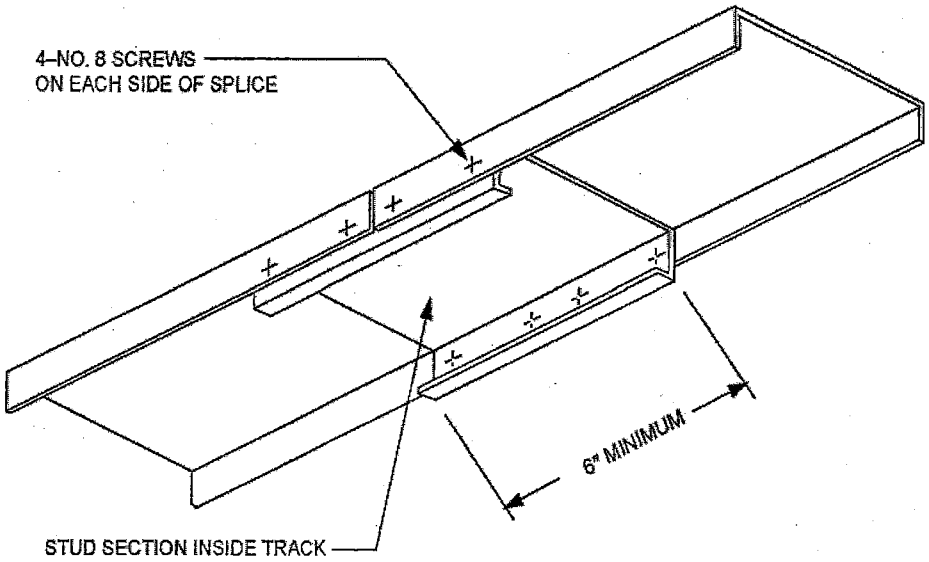

For SI: 1 inch = 25.4 mm.

FIGURE R603.3.5
TRACK SPLICE

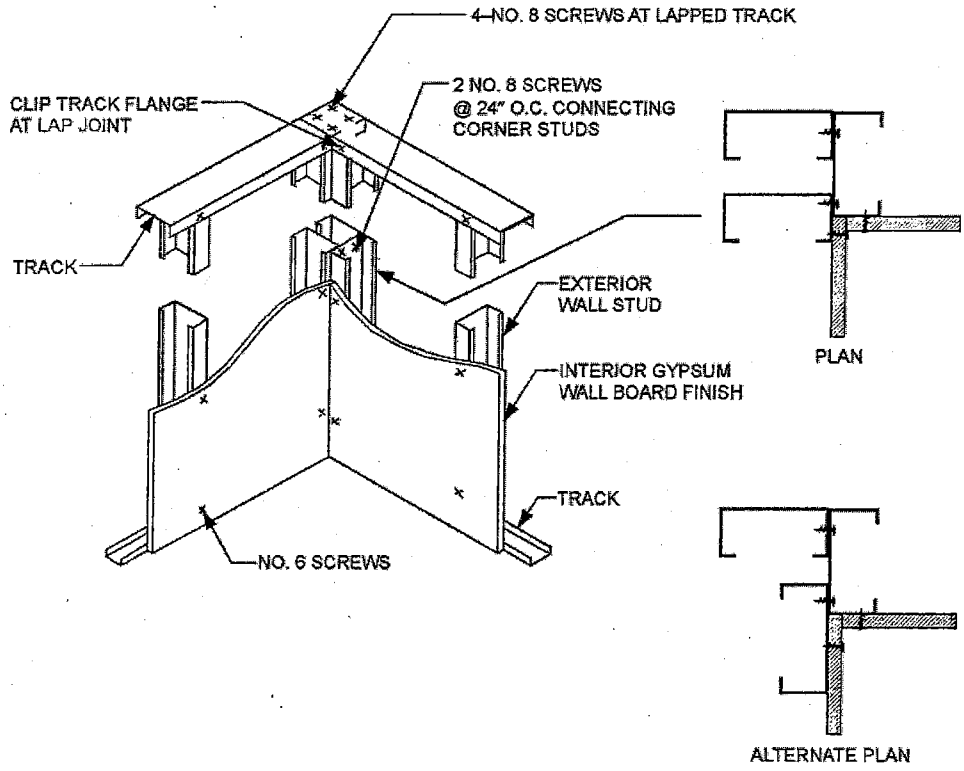

For SI: 1 inch = 25.4 mm.

FIGURE R603.4
CORNER FRAMING

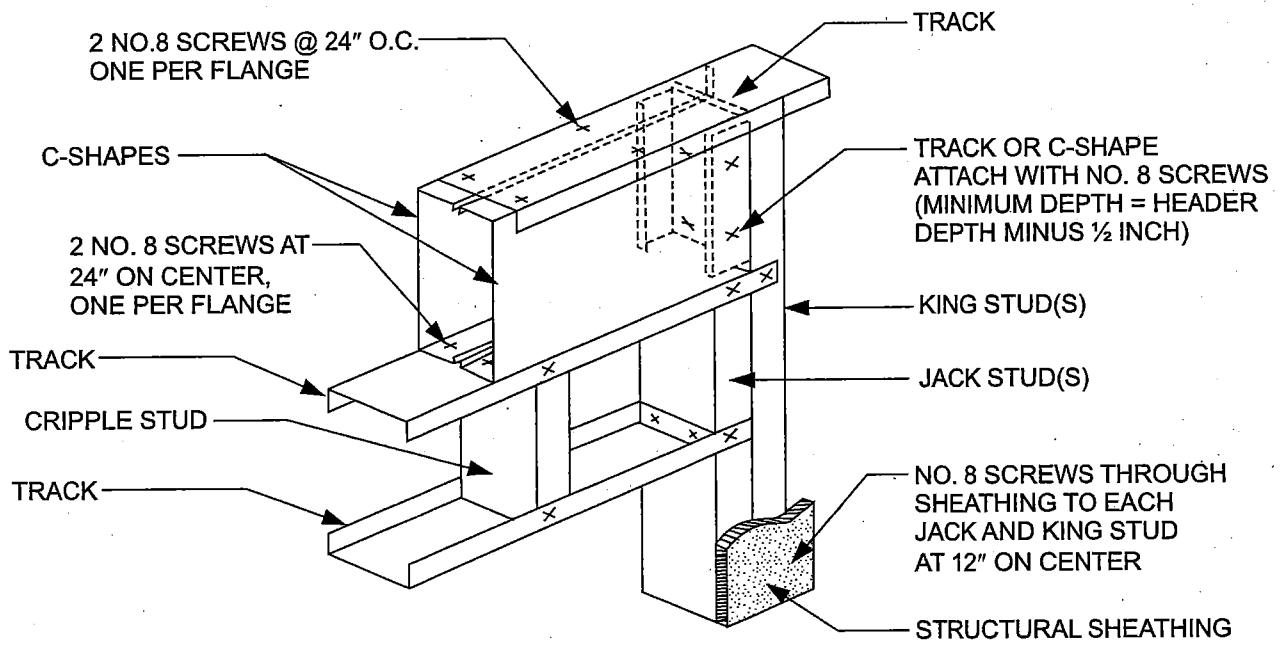

For SI: 1 inch = 25.4 mm.

FIGURE R603.6(1)
BOX BEAM HEADER

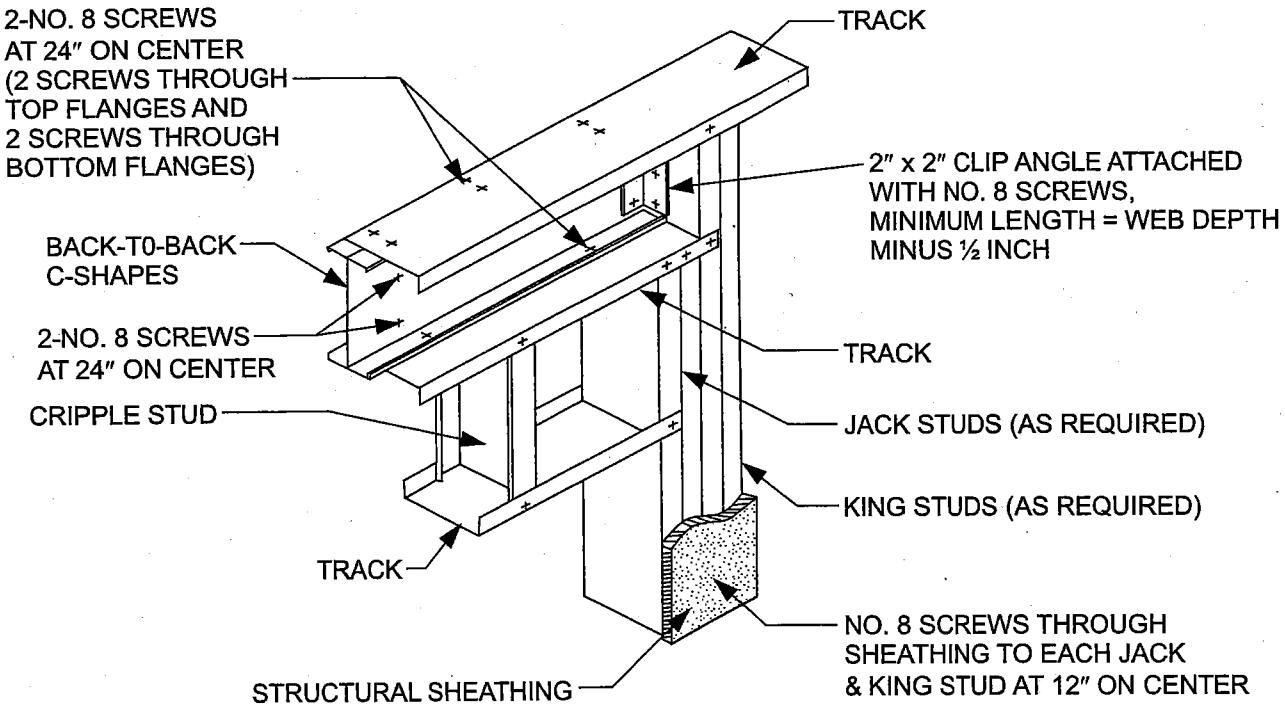

For SI: 1 inch = 25.4 mm.

FIGURE R603.6(2)
BACK-TO-BACK HEADER

3961

TABLE R603.6(1)
BOX-BEAM HEADER SPANS
Headers Supporting Roof and Ceiling Only
(33 Ksi steel)[a, b]

MEMBER DESIGNATION	GROUND SNOW LOAD (20 psf)					GROUND SNOW LOAD (30 psf)				
	Building width[c] (feet)					Building width[c] (feet)				
	24	28	32	36	40	24	28	32	36	40
2-350S162-33	3′-3″	2′-8″	2′-2″	—	—	2′-8″	2′-2″	—	—	—
2-350S162-43	4′-2″	3′-9″	3′-4″	2′-11″	2′-7″	3′-9″	3′-4″	2′-11″	2′-7″	2′-2″
2-350S162-54	5′-0″	4′-6″	4′-1″	3′-8″	3′-4″	4′-6″	4′-1″	3′-8″	3′-3″	3′-0″
2-350S162-68	5′-7″	5′-1″	4′-7″	4′-3″	3′-10″	5′-1″	4′-7″	4′-2″	3′-10″	3′-5″
2-350S162-97	7′-1″	6′-6″	6′-1″	5′-8″	5′-3″	6′-7″	6′-1″	5′-7″	5′-3″	4′-11″
2-550S162-33	4′-8″	4′-0″	3′-6″	3′-0″	2′-6″	4′-1″	3′-6″	3′-0″	2′-6″	—
2-550S162-43	6′-0″	5′-4″	4′-10″	4′-4″	3′-11″	5′-5″	4′-10″	4′-4″	3′-10″	3′-5″
2-550S162-54	7′-0″	6′-4″	5′-9″	5′-4″	4′-10″	6′-5″	5′-9″	5′-3″	4′-10″	4′-5″
2-550S162-68	8′-0″	7′-4″	6′-9″	6′-3″	5′-10″	7′-5″	6′-9″	6′-3″	5′-9″	5′-4″
2-550S162-97	9′-11″	9′-2″	8′-6″	8′-0″	7′-6″	9′-3″	8′-6″	8′-0″	7′-5″	7′-0″
2-800S162-33	4′-5″	3′-11″	3′-5″	3′-1″	2′-10″	3′-11″	3′-6″	3′-1″	2′-9″	2′-3″
2-800S162-43	7′-3″	6′-7″	5′-11″	5′-4″	4′-10″	6′-7″	5′-11″	5′-4″	4′-9″	4′-3″
2-800S162-54	8′-10″	8′-0″	7′-4″	6′-9″	6′-2″	8′-1″	7′-4″	6′-8″	6′-1″	5′-7″
2-800S162-68	10′-5″	9′-7″	8′-10″	8′-2″	7′-7″	9′-8″	8′-10″	8′-1″	7′-6″	7′-0″
2-800S162-97	13′-1″	12′-1″	11′-3″	10′-7″	10′-0″	12′-2″	11′-4″	10′-6″	10′-0″	9′-4″
2-1000S162-43	7′-10″	6′-10″	6′-1″	5′-6″	5′-0″	6′-11″	6′-1″	5′-5″	4′-11″	4′-6″
2-1000S162-54	10′-0″	9′-1″	8′-3″	7′-7″	7′-0″	9′-2″	8′-4″	7′-7″	6′-11″	6′-4″
2-1000S162-68	11′-11″	10′-11″	10′-1″	9′-4″	8′-8″	11′-0″	10′-1″	9′-3″	8′-7″	8′-0″
2-1000S162-97	15′-3″	14′-3″	13′-5″	12′-6″	11′-10″	14′-4″	13′-5″	12′-6″	11′-9″	11′-0″
2-1200S162-54	11′-1″	10′-0″	9′-2″	8′-5″	7′-9″	10′-1″	9′-2″	8′-4″	7′-7″	7′-0″
2-1200S162-68	13′-3″	12′-1″	11′-2″	10′-4″	9′-7″	12′-3″	11′-2″	10′-3″	9′-6″	8′-10″
2-1200S162-97	16′-8″	15′-7″	14′-8″	13′-11″	13′-3″	15′-8″	14′-8″	13′-11″	13′-2″	12′-6″

For SI: 1 inch = 25.4 mm, 1 foot = 304.8 mm, 1 pound per square foot = 0.0479 kPa, 1 pound per square inch = 6.895 kPa, 1 Ksi = 1,000 psi = 6.895 MPa.

a. Deflection criterion: *L*/360 for live loads, *L*/240 for total loads.

b. Design load assumptions:
Roof/ceiling dead load is 12 psf.
Attic dead load is 10 psf.

c. Building width is in the direction of horizontal framing members supported by the header.

TABLE R603.6(2)
BOX-BEAM HEADER SPANS
Headers Supporting Roof and Ceiling Only
(50 Ksi steel)[a, b]

MEMBER DESIGNATION	GROUND SNOW LOAD (20 psf)					GROUND SNOW LOAD (30 psf)				
	Building width[c] (feet)					Building width[c] (feet)				
	24	28	32	36	40	24	28	32	36	40
2-350S162-33	4′-4″	3′-11″	3′-6″	3′-2″	2′-10″	3′-11″	3′-6″	3′-1″	2′-9″	2′-5″
2-350S162-43	5′-6″	5′-0″	4′-7″	4′-2″	3′-10″	5′-0″	4′-7″	4′-2″	3′-10″	3′-6″
2-350S162-54	6′-2″	5′-10″	5′-8″	5′-3″	4′-10″	5′-11″	5′-8″	5′-2″	4′-10″	4′-6″
2-350S162-68	6′-7″	6′-3″	6′-0″	5′-10″	5′-8″	6′-4″	6′-1″	5′-10″	5′-8″	5′-6″
2-350S162-97	7′-3″	6′-11″	6′-8″	6′-5″	6′-3″	7′-0″	6′-8″	6′-5″	6′-3″	6′-0″
2-550S162-33	6′-2″	5′-6″	5′-0″	4′-7″	4′-2″	5′-7″	5′-0″	4′-6″	4′-1″	3′-8″
2-550S162-43	7′-9″	7′-2″	6′-7″	6′-1″	5′-8″	7′-3″	6′-7″	6′-1″	5′-7″	5′-2″
2-550S162-54	8′-9″	8′-5″	8′-1″	7′-9″	7′-3″	8′-6″	8′-1″	7′-8″	7′-2″	6′-8″
2-550S162-68	9′-5″	9′-0″	8′-8″	8′-4″	8′-1″	9′-1″	8′-8″	8′-4″	8′-1″	7′-10″
2-550S162-97	10′-5″	10′-0″	9′-7″	9′-3″	9′-0″	10′-0″	9′-7″	9′-3″	8′-11″	8′-8″
2-800S162-33	4′-5″	3′-11″	3′-5″	3′-1″	2′-10″	3′-11″	3′-6″	3′-1″	2′-9″	2′-6″
2-800S162-43	9′-1″	8′-5″	7′-8″	6′-11″	6′-3″	8′-6″	7′-8″	6′-10″	6′-2″	5′-8″
2-800S162-54	10′-10″	10′-2″	9′-7″	9′-0″	8′-5″	10′-2″	9′-7″	8′-11″	8′-4″	7′-9″
2-800S162-68	12′-8″	11′-10″	11′-2″	10′-7″	10′-1″	11′-11″	11′-2″	10′-7″	10′-0″	9′-6″
2-800S162-97	14′-2″	13′-6″	13′-0″	12′-7″	12′-2″	13′-8″	13′-1″	12′-7″	12′-2″	11′-9″
2-1000S162-43	7′-10″	6′-10″	6′-1″	5′-6″	5′-0″	6′-11″	6′-1″	5′-5″	4′-11″	4′-6″
2-1000S162-54	12′-3″	11′-5″	10′-9″	10′-2″	9′-6″	11′-6″	10′-9″	10′-1″	9′-5″	8′-9″
2-1000S162-68	14′-5″	13′-5″	12′-8″	12′-0″	11′-6″	13′-6″	12′-8″	12′-0″	11′-5″	10′-10″
2-1000S162-97	17′-1″	16′-4″	15′-8″	14′-11″	14′-3″	16′-5″	15′-9″	14′-10″	14′-1″	13′-6″
2-1200S162-54	12′-11″	11′-3″	10′-0″	9′-0″	8′-2″	11′-5″	10′-0″	9′-0″	8′-1″	7′-4″
2-1200S162-68	15′-11″	14′-10″	14′-0″	13′-4″	12′-8″	15′-0″	14′-0″	13′-3″	12′-7″	11′-11″
2-1200S162-97	19′-11″	18′-7″	17′-6″	16′-8″	15′-10″	18′-9″	17′-7″	16′-7″	15′-9″	15′-0″

For SI: 1 inch = 25.4 mm, 1 foot = 304.8 mm, 1 pound per square foot = 0.0479 kPa, 1 pound per square inch = 6.895 kPa, 1 Ksi = 1,000 psi = 6.895 MPa.

a. Deflection criterion: *L*/360 for live loads, *L*/240 for total loads.

b. Design load assumptions:
Roof/ceiling dead load is 12 psf.
Attic dead load is 10 psf.

c. Building width is in the direction of horizontal framing members supported by the header.

TABLE R603.6(3)
BOX-BEAM HEADER SPANS
Headers Supporting Roof and Ceiling Only
(33 Ksi steel)[a, b]

MEMBER DESIGNATION	GROUND SNOW LOAD (50 psf)					GROUND SNOW LOAD (70 psf)				
	Building width[c] (feet)					Building width[c] (feet)				
	24	28	32	36	40	24	28	32	36	40
2-350S162-33	—	—	—	—	—	—	—	—	—	—
2-350S162-43	2′-4″	—	—	—	—	—	—	—	—	—
2-350S162-54	3′-1″	2′-8″	2′-3″	—	—	2′-1″	—	—	—	—
2-350S162-68	3′-7″	3′-2″	2′-8″	2′-3″	—	2′-6″	—	—	—	—
2-350S162-97	5′-1″	4′-7″	4′-3″	3′-11″	3′-7″	4′-1″	3′-8″	3′-4″	3′-0″	2′-8″
2-550S162-33	2′-2″	—	—	—	—	—	—	—	—	—
2-550S162-43	3′-8″	3′-1″	2′-6″	—	—	2′-3″	—	—	—	—
2-550S162-54	4′-7″	4′-0″	3′-6″	3′-0″	2′-6″	3′-3″	2′-8″	2′-1″	—	—
2-550S162-68	5′-6″	4′-11″	4′-5″	3′-11″	3′-6″	4′-3″	3′-8″	3′-1″	2′-7″	2′-1″
2-550S162-97	7′-3″	6′-7″	6′-1″	5′-8″	5′-3″	5′-11″	5′-4″	4′-11″	4′-6″	4′-1″
2-800S162-33	2′-7″	—	—	—	—	—	—	—	—	—
2-800S162-43	4′-6″	3′-9″	3′-1″	2′-5″	—	2′-10″	—	—	—	—
2-800S162-54	5′-10″	5′-1″	4′-6″	3′-11″	3′-4″	4′-3″	3′-6″	2′-9″	—	—
2-800S162-68	7′-2″	6′-6″	5′-10″	5′-3″	4′-8″	5′-7″	4′-10″	4′-2″	3′-7″	2′-11″
2-800S162-97	9′-7″	8′-9″	8′-2″	7′-7″	7′-0″	7′-11″	7′-2″	6′-7″	6′-0″	5′-7″
2-1000S162-43	4′-8″	4′-1″	3′-6″	2′-9″	—	3′-3″	2′-2″	—	—	—
2-1000S162-54	6′-7″	5′-10″	5′-1″	4′-5″	3′-9″	4′-10″	4′-0″	3′-2″	2′-3″	—
2-1000S162-68	8′-3″	7′-5″	6′-8″	6′-0″	5′-5″	6′-5″	5′-7″	4′-9″	4′-1″	3′-5″
2-1000S162-97	11′-4″	10′-5″	9′-8″	9′-0″	8′-5″	9′-5″	8′-6″	7′-10″	7′-2″	6′-7″
2-1200S162-54	7′-3″	6′-5″	5′-7″	4′-10″	4′-2″	5′-4″	4′-4″	3′-5″	2′-5″	—
2-1200S162-68	9′-2″	8′-2″	7′-5″	6′-8″	6′-0″	7′-1″	6′-2″	5′-4″	4′-6″	3′-9″
2-1200S162-97	12′-10″	11′-9″	10′-11″	10′-2″	9′-6″	10′-7″	9′-8″	8′-10″	8′-2″	7′-6″

For SI: 1 inch = 25.4 mm, 1 foot = 304.8 mm, 1 pound per square foot = 0.0479 kPa, 1 pound per square inch = 6.895 kPa, 1 Ksi = 1,000 psi = 6.895 MPa.

a. Deflection criterion: *L*/360 for live loads, *L*/240 for total loads.

b. Design load assumptions:
Roof/ceiling dead load is 12 psf.
Attic dead load is 10 psf.

c. Building width is in the direction of horizontal framing members supported by the header.

TABLE R603.6(4)
BOX-BEAM HEADER SPANS
Headers Supporting Roof and Ceiling Only
(50 Ksi steel)[a, b]

MEMBER DESIGNATION	GROUND SNOW LOAD (50 psf)					GROUND SNOW LOAD (70 psf)				
	Building width[c] (feet)					Building width[c] (feet)				
	24	28	32	36	40	24	28	32	36	40
2-350S162-33	2′-7″	2′-2″	—	—	—	—	—	—	—	—
2-350S162-43	3′-8″	3′-3″	2′-10″	2′-6″	2′-1″	2′-8″	2′-3″	—	—	—
2-350S162-54	4′-8″	4′-2″	3′-9″	3′-5″	3′-1″	3′-7″	3′-2″	2′-9″	2′-5″	2′-0″
2-350S162-68	5′-7″	5′-2″	4′-9″	4′-4″	3′-11″	4′-7″	4′-1″	3′-7″	3′-2″	2′-10″
2-350S162-97	6′-2″	5′-11″	5′-8″	5′-6″	5′-4″	5′-8″	5′-5″	5′-3″	4′-11″	4′-7″
2-550S162-33	3′-11″	3′-4″	2′-10″	2′-4″	—	2′-7″	—	—	—	—
2-550S162-43	5′-4″	4′-10″	4′-4″	3′-10″	3′-5″	4′-2″	3′-7″	3′-1″	2′-7″	2′-1″
2-550S162-54	6′-11″	6′-3″	5′-9″	5′-3″	4′-9″	5′-6″	4′-11″	4′-5″	3′-11″	3′-5″
2-550S162-68	8′-0″	7′-6″	6′-11″	6′-5″	5′-11″	6′-9″	6′-1″	5′-6″	5′-0″	4′-7″
2-550S162-97	8′-11″	8′-6″	8′-2″	7′-11″	7′-8″	8′-1″	7′-9″	7′-6″	7′-1″	6′-7″
2-800S162-33	2′-8″	2′-4″	2′-1″	1′-11″	1′-9″	2′-0″	1′-9″	—	—	—
2-800S162-43	5′-10″	5′-2″	4′-7″	4′-2″	3′-10″	4′-5″	3′-11″	3′-6″	3′-0″	2′-6″
2-800S162-54	8′-0″	7′-3″	6′-8″	6′-1″	5′-7″	6′-5″	5′-9″	5′-1″	4′-7″	4′-0″
2-800S162-68	9′-9″	9′-0″	8′-3″	7′-8″	7′-1″	8′-0″	7′-3″	6′-7″	6′-0″	5′-6″
2-800S162-97	12′-1″	11′-7″	11′-2″	10′-8″	10′-2″	11′-0″	10′-4″	9′-9″	9′-2″	8′-7″
2-1000S162-43	4′-8″	4′-1″	3′-8″	3′-4″	3′-0″	3′-6″	3′-1″	2′-9″	2′-6″	2′-3″
2-1000S162-54	9′-1″	8′-2″	7′-3″	6′-7″	6′-0″	7′-0″	6′-2″	5′-6″	5′-0″	4′-6″
2-1000S162-68	11′-1″	10′-2″	9′-5″	8′-8″	8′-1″	9′-1″	8′-3″	7′-6″	6′-10″	6′-3″
2-1000S162-97	13′-9″	12′-11″	12′-2″	11′-7″	11′-1″	11′-11″	11′-3″	10′-7″	9′-11″	9′-4″
2-1200S162-54	7′-8″	6′-9″	6′-1″	5′-6″	5′-0″	5′-10″	5′-1″	4′-7″	4′-1″	3′-9″
2-1200S162-68	12′-3″	11′-3″	10′-4″	9′-7″	8′-11″	10′-1″	9′-1″	8′-3″	7′-6″	6′-10″
2-1200S162-97	15′-4″	14′-5″	13′-7″	12′-11″	12′-4″	13′-4″	12′-6″	11′-10″	11′-1″	10′-5″

For SI: 1 inch = 25.4 mm, 1 foot = 304.8 mm, 1 pound per square foot = 0.0479 kPa, 1 pound per square inch = 6.895 kPa, 1 Ksi = 1,000 psi = 6.895 MPa.

a. Deflection criterion: *L*/360 for live loads, *L*/240 for total loads.

b. Design load assumptions:
Roof/ceiling dead load is 12 psf.
Attic dead load is 10 psf.

c. Building width is in the direction of horizontal framing members supported by the header.

TABLE R603.6(5)
BOX-BEAM HEADER SPANS
Headers Supporting One Floor, Roof and Ceiling
(33 Ksi steel)[a, b]

MEMBER DESIGNATION	GROUND SNOW LOAD (20 psf)					GROUND SNOW LOAD (30 psf)				
	Building width[c] (feet)					Building width[c] (feet)				
	24	28	32	36	40	24	28	32	36	40
2-350S162-33	—	—	—	—	—	—	—	—	—	—
2-350S162-43	2′-2″	—	—	—	—	2′-1″	—	—	—	—
2-350S162-54	2′-11″	2′-5″	—	—	—	2′-10″	2′-4″	—	—	—
2-350S162-68	3′-8″	3′-2″	2′-9″	2′-4″	-	3′-7″	3′-1″	2′-8″	2′-3″	—
2-350S162-97	4′-11″	4′-5″	4′-2″	3′-8″	3′-5″	4′-10″	4′-5″	4′-0″	3′-8″	3′-4″
2-550S162-33	—	—	—	—	—	—	—	—	—	—
2-550S162-43	3′-5″	2′-9″	2′-1″	—	—	3′-3″	2′-7″	—	—	—
2-550S162-54	4′-4″	3′-9″	3′-2″	2′-7″	2′-1″	4′-3″	3′-7″	3′-1″	2′-6″	—
2-550S162-68	5′-3″	4′-8″	4′-1″	3′-7″	3′-2″	5′-2″	4′-7″	4′-0″	3′-6″	3′-1″
2-550S162-97	7′-0″	6′-5″	5′-10″	5′-5″	5′-0″	6′-11″	6′-4″	5′-9″	5′-4″	4′-11″
2-800S162-33	2′-1″	—	—	—	—	—	—	—	—	—
2-800S162-43	4′-2″	3′-4″	2′-7″	—	—	4′-0″	3′-3″	2′-5″	—	—
2-800S162-54	5′-6″	4′-9″	4′-1″	3′-5″	2′-9″	5′-5″	4′-8″	3′-11″	3′-3″	2′-8″
2-800S162-68	6′-11″	6′-2″	5′-5″	4′-10″	4′-3″	6′-9″	6′-0″	5′-4″	4′-8″	4′-1″
2-800S162-97	9′-4″	8′-6″	7′-10″	7′-3″	6′-8″	9′-2″	8′-4″	7′-8″	7′-1″	6′-7″
2-1000S162-43	4′-4″	3′-9″	2′-11″	—	—	4′-3″	3′-8″	2′-9″	—	—
2-1000S162-54	6′-3″	5′-5″	4′-7″	3′-11″	3′-2″	6′-1″	5′-3″	4′-6″	3′-9″	3′-0″
2-1000S162-68	7′-11″	7′-0″	6′-3″	5′-6″	4′-10″	7′-9″	6′-10″	6′-1″	5′-4″	4′-9″
2-1000S162-97	11′-0″	10′-1″	9′-3″	8′-7″	8′-0″	10′-11″	9′-11″	9′-2″	8′-5″	7′-10″
2-1200S162-54	6′-11″	5′-11″	5′-1″	4′-3″	3′-5″	6′-9″	5′-9″	4′-11″	4′-1″	3′-3″
2-1200S162-68	8′-9″	7′-9″	6′-11″	6′-1″	5′-4″	8′-7″	7′-7″	6′-9″	5′-11″	5′-3″
2-1200S162-97	12′-4″	11′-5″	10′-6″	9′-8″	9′-0″	12′-3″	11′-3″	10′-4″	9′-6″	8′-10″

For SI: 1 inch = 25.4 mm, 1 foot = 304.8 mm, 1 pound per square foot = 0.0479 kPa, 1 pound per square inch = 6.895 kPa, 1 Ksi = 1,000 psi = 6.895 MPa.

a. Deflection criterion: *L*/360 for live loads, *L*/240 for total loads.

b. Design load assumptions:
Second floor dead load is 10 psf.
Roof/ceiling dead load is 12 psf.
Second floor live load is 30 psf.
Attic dead load is 10 psf.

c. Building width is in the direction of horizontal framing members supported by the header.

TABLE R603.6(6)
BOX-BEAM HEADER SPANS
Headers Supporting One Floor, Roof and Ceiling
(50 Ksi steel)[a, b]

MEMBER DESIGNATION	GROUND SNOW LOAD (20 psf)					GROUND SNOW LOAD (30 psf)				
	Building width[c] (feet)					Building width[c] (feet)				
	24	28	32	36	40	24	28	32	36	40
2-350S162-33	2′-4″	—	—	—	—	2′-3″	—	—	—	—
2-350S162-43	3′-4″	2′-11″	2′-6″	2′-1″	—	3′-3″	2′-10″	2′-5″	2′-0″	—
2-350S162-54	4′-4″	3′-10″	3′-5″	3′-1″	2′-9″	4′-3″	2′-9″	3′-4″	3′-0″	2′-8″
2-350S162-68	5′-0″	4′-9″	4′-7″	4′-2″	3′-9″	4′-11″	4′-8″	4′-6″	4′-1″	3′-9″
2-350S162-97	5′-6″	5′-3″	5′-1″	4′-11″	2′-9″	5′-5″	5′-2″	5′-0″	4′-10″	4′-8″
2-550S162-33	3′-6″	2′-11″	2′-4″	—	—	3′-5″	2′-10″	2′-3″	—	—
2-550S162-43	5′-0″	4′-5″	3′-11″	3′-5″	3′-0″	4′-11″	4′-4″	3′-10″	3′-4″	2′-11″
2-550S162-54	6′-6″	5′-10″	5′-3″	4′-9″	4′-4″	6′-4″	5′-9″	5′-2″	4′-8″	4′-3″
2-550S162-68	7′-2″	6′-10″	6′-5″	5′-11″	5′-6″	7′-0″	6′-9″	6′-4″	5′-10″	5′-4″
2-550S162-97	7′-11″	7′-7″	7′-3″	7′-0″	6′-10″	7′-9″	7′-5″	7′-2″	6′-11″	6′-9″
2-800S162-33	2′-5″	2′-2″	1′-11″	1′-9″	—	2′-5″	2′-1″	1′-10″	1′-8″	—
2-800S162-43	5′-5″	4′-9″	4′-3″	3′-9″	3′-5″	5′-3″	4′-8″	4′-1″	3′-9″	3′-5″
2-800S162-54	7′-6″	6′-9″	6′-2″	5′-7″	5′-0″	7′-5″	6′-8″	6′-0″	5′-5″	4′-11″
2-800S162-68	9′-3″	8′-5″	7′-8″	7′-1″	6′-6″	9′-1″	8′-3″	7′-7″	7′-0″	6′-5″
2-800S162-97	10′-9″	10′-3″	9′-11″	9′-7″	9′-3″	10′-7″	10′-1″	9′-9″	9′-5″	9′-1″
2-1000S162-43	4′-4″	3′-9″	3′-4″	3′-0″	2′-9″	4′-3″	3′-8″	3′-3″	2′-11″	2′-8″
2-1000S162-54	8′-6″	7′-6″	6′-8″	6′-0″	5′-5″	8′-4″	7′-4″	6′-6″	5′-10″	5′-4″
2-1000S162-68	10′-6″	9′-7″	8′-9″	8′-0″	7′-5″	10′-4″	9′-5″	8′-7″	7′-11″	7′-3″
2-1000S162-97	12′-11″	12′-4″	11′-8″	11′-1″	10′-6″	12′-9″	12′-2″	11′-6″	10′-11″	10′-5″
2-1200S162-54	7′-1″	6′-2″	5′-6″	5′-0″	4′-6″	6′-11″	6′-1″	5′-5″	4′-10″	4′-5″
2-1200S162-68	11′-7″	10′-7″	9′-8″	8′-11″	8′-2″	11′-5″	10′-5″	9′-6″	8′-9″	8′-0″
2-1200S162-97	14′-9″	13′-9″	13′-0″	12′-4″	11′-9″	14′-7″	13′-8″	12′-10″	12′-3″	11′-8″

For SI: 1 inch = 25.4 mm, 1 foot = 304.8 mm, 1 pound per square foot = 0.0479 kPa, 1 pound per square inch = 6.895 kPa, 1 Ksi = 1,000 psi = 6.895 MPa.

a. Deflection criterion: *L*/360 for live loads, *L*/240 for total loads.

b. Design load assumptions:
Second floor dead load is 10 psf.
Roof/ceiling dead load is 12 psf.
Second floor live load is 30 psf.
Attic live load is 10 psf.

c. Building width is in the direction of horizontal framing members supported by the header.

TABLE R603.6(7)
BOX-BEAM HEADER SPANS
Headers Supporting One Floor, Roof and Ceiling
(33 Ksi steel)[a, b]

MEMBER DESIGNATION	GROUND SNOW LOAD (50 psf)					GROUND SNOW LOAD (70 psf)				
	Building width[c] (feet)					Building width[c] (feet)				
	24	28	32	36	40	24	28	32	36	40
2-350S162-33	—	—	—	—	—	—	—	—	—	—
2-350S162-43	—	—	—	—	—	—	—	—	—	—
2-350S162-54	—	—	—	—	—	—	—	—	—	—
2-350S162-68	2′-8″	2′-3″	—	—	—	—	—	—	—	—
2-350S162-97	4′-0″	3′-7″	3′-3″	2′-11″	2′-7″	3′-4″	2′-11″	2′-6″	2′-2″	—
2-550S162-33	—	—	—	—	—	—	—	—	—	—
2-550S162-43	2′-0″	—	—	—	—	—	—	—	—	—
2-550S162-54	3′-1″	2′-6″	—	—	—	—	—	—	—	—
2-550S162-68	4′-1″	3′-6″	2′-11″	2′-5″	—	3′-1″	2′-5″	—	—	—
2-550S162-97	5′-10″	5′-3″	4′-10″	4′-5″	4′-0″	4′-11″	4′-5″	3′-11″	3′-6″	3′-2″
2-800S162-33	—	—	—	—	—	—	—	—	—	—
2-800S162-43	2′-6″	—	—	—	—	—	—	—	—	—
2-800S162-54	4′-0″	3′-3″	2′-6″	—	—	2′-8″	—	—	—	—
2-800S162-68	5′-5″	4′-8″	4′-0″	3′-4″	2′-8″	4′-2″	3′-4″	2′-6″	—	—
2-800S162-97	7′-9″	7′-1″	6′-6″	5′-11″	5′-5″	6′-7″	5′-11″	5′-4″	4′-10″	4′-4″
2-1000S162-43	2′-10″	—	—	—	—	—	—	—	—	—
2-1000S162-54	4′-7″	3′-8″	2′-9″	—	—	3′-0″	—	—	—	—
2-1000S162-68	6′-2″	5′-4″	4′-7″	3′-10″	3′-1″	4′-9″	3′-10″	2′-11″	—	—
2-1000S162-97	9′-3″	8′-5″	7′-8″	7′-1″	6′-6″	7′-10″	7′-1″	6′-5″	5′-9″	5′-2″
2-1200S162-54	5′-0″	4′-0″	3′-1″	—	—	3′-4″	—	—	—	—
2-1200S162-68	6′-10″	5′-11″	5′-0″	4′-3″	3′-5″	5′-3″	4′-3″	3′-2″	—	—
2-1200S162-97	10′-5″	9′-6″	8′-8″	8′-0″	7′-4″	8′-10″	8′-0″	7′-3″	6′-6″	5′-10″

For SI: 1 inch = 25.4 mm, 1 foot = 304.8 mm, 1 pound per square foot = 0.0479 kPa, 1 pound per square inch = 6.895 kPa, 1 Ksi = 1,000 psi = 6.895 MPa.

a. Deflection criterion: *L*/360 for live loads, *L*/240 for total loads.

b. Design load assumptions:
Second floor dead load is 10 psf.
Roof/ceiling dead load is 12 psf.
Second floor live load is 30 psf.
Attic live load is 10 psf.

c. Building width is in the direction of horizontal framing members supported by the header.

TABLE R603.6(8)
BOX-BEAM HEADER SPANS
Headers Supporting One Floor, Roof and Ceiling
(50 Ksi steel)[a, b]

MEMBER DESIGNATION	GROUND SNOW LOAD (50 psf)					GROUND SNOW LOAD (70 psf)				
	Building width[c] (feet)					Building width[c] (feet)				
	24	28	32	36	40	24	28	32	36	40
2-350S162-33	—	—	—	—	—	—	—	—	—	—
2-350S162-43	2′-8″	—	—	—	—	—	—	—	—	—
2-350S162-54	3′-5″	3′-0″	2′-7″	2′-2″	-	2′-8″	2′-2″	—	—	—
2-350S162-68	4′-6″	4′-1″	3′-8″	3′-3″	2′-11″	3′-9″	3′-3″	2′-10″	2′-5″	2′-1″
2-350S162-97	5′-1″	4′-10″	4′-8″	4′-6″	4′-5″	4′-10″	4′-7″	4′-4″	4′-0″	3′-8″
2-550S162-33	2′-4″	—	—	—	—	—	—	—	—	—
2-550S162-43	3′-10″	3′-4″	2′-9″	2′-3″	—	2′-11″	2′-3″	—	—	—
2-550S162-54	5′-3″	3′-8″	4′-1″	3′-8″	3′-2″	4′-3″	3′-8″	3′-1″	2′-7″	2′-0″
2-550S162-68	6′-5″	5′-10″	5′-3″	4′-9″	4′-4″	5′-5″	4′-9″	4′-3″	3′-9″	3′-4″
2-550S162-97	7′-4″	7′-0″	6′-9″	6′-6″	6′-4″	6′-11″	6′-8″	6′-3″	5′-10″	5′-5″
2-800S162-33	1′-11″	1′-8″	—	—	—	—	—	—	—	—
2-800S162-43	4′-2″	3′-8″	3′-4″	2′-9″	2′-2″	3′-5″	2′-9″	—	—	—
2-800S162-54	6′-1″	5′-5″	4′-10″	4′-3″	3′-9″	4′-11″	4′-3″	3′-8″	3′-0″	2′-5″
2-800S162-68	7′-8″	6′-11″	6′-3″	5′-9″	5′-2″	6′-5″	5′-9″	5′-1″	4′-6″	4′-0″
2-800S162-97	9′-11″	9′-6″	9′-2″	8′-10″	8′-3″	9′-5″	8′-10″	8′-2″	7′-7″	7′-0″
2-1000S162-43	3′-4″	2′-11″	2′-7″	2′-5″	2′-2″	2′-8″	2′-5″	2′-2″	—	—
2-1000S162-54	6′-7″	5′-10″	5′-3″	4′-9″	4′-3″	5′-4″	4′-9″	4′-1″	3′-5″	2′-9″
2-1000S162-68	8′-8″	7′-10″	7′-2″	6′-6″	5′-11″	7′-4″	6′-6″	5′-9″	5′-1″	4′-6″
2-1000S162-97	11′-7″	10′-11″	10′-3″	9′-7″	9′-0″	10′-5″	9′-7″	8′-10″	8′-2″	7′-8″
2-1200S162-54	5′-6″	4′-10″	4′-4″	3′-11″	3′-7″	4′-5″	3′-11″	3′-6″	3′-2″	2′-11″
2-1200S162-68	9′-7″	8′-8″	7′-11″	7′-2″	6′-6″	8′-1″	7′-2″	6′-4″	5′-8″	5′-0″
2-1200S162-97	12′-11″	12′-2″	11′-6″	10′-8″	10′-0″	11′-8″	10′-9″	9′-11″	9′-2″	8′-6″

For SI: 1 inch = 25.4 mm, 1 foot = 304.8 mm, 1 pound per square foot = 0.0479 kPa, 1 pound per square inch = 6.895 kPa, 1 Ksi = 1,000 psi = 6.895 MPa.

a. Deflection criterion: *L*/360 for live loads, *L*/240 for total loads.

b. Design load assumptions:
Second floor dead load is 10 psf.
Roof/ceiling dead load is 12 psf.
Second floor live load is 30 psf.
Attic live load is 10 psf.

c. Building width is in the direction of horizontal framing members supported by the header.

TABLE R603.6(9)
BOX-BEAM HEADER SPANS
Headers Supporting Two Floors, Roof and Ceiling
(33 Ksi steel)[a, b]

MEMBER DESIGNATION	GROUND SNOW LOAD (20 psf)					GROUND SNOW LOAD (30 psf)				
	Building width[c] (feet)					Building width[c] (feet)				
	24	28	32	36	40	24	28	32	36	40
2-350S162-33	—	—	—	—	—	—	—	—	—	—
2-350S162-43	—	—	—	—	—	—	—	—	—	—
2-350S162-54	—	—	—	—	—	—	—	—	—	—
2-350S162-68	—	—	—	—	—	—	—	—	—	—
2-350S162-97	3′-1″	2′-8″	2′-3″	—	—	3′-1″	2′-7″	2′-2″	—	—
2-550S162-33	—	—	—	—	—	—	—	—	—	—
2-550S162-43	—	—	—	—	—	—	—	—	—	—
2-550S162-54	—	—	—	—	—	—	—	—	—	—
2-550S162-68	2′-9″	—	—	—	—	2′-8″	—	—	—	—
2-550S162-97	4′-8″	4′-1″	3′-7″	3′-2″	2′-9″	4′-7″	4′-0″	3′-6″	3′-1″	2′-8″
2-800S162-33	—	—	—	—	—	—	—	—	—	—
2-800S162-43	—	—	—	—	—	—	—	—	—	—
2-800S162-54	2′-1″	—	—	—	—	—	—	—	—	—
2-800S162-68	3′-8″	2′-9″	—	—	—	3′-7″	2′-8″	—	—	—
2-800S162-97	6′-3″	5′-6″	4′-11″	4′-4″	3′-9″	6′-2″	5′-5″	4′-10″	4′-3″	3′-9″
2-1000S162-43	—	—	—	—	—	—	—	—	—	—
2-1000S162-54	2′-5″	—	—	—	—	2′-3″	—	—	—	—
2-1000S162-68	4′-3″	3′-2″	2′-0″	—	—	4′-2″	3′-1″	—	—	—
2-1000S162-97	7′-5″	6′-7″	5′-10″	5′-2″	4′-7″	7′-4″	6′-6″	5′-9″	5′-1″	4′-6″
2-1200S162-54	2′-7″	—	—	—	—	2′-6″	—	—	—	—
2-1200S162-68	4′-8″	3′-6″	2′-2″	—	—	4′-7″	3′-5″	2′-0″	—	—
2-1200S162-97	8′-5″	7′-5″	6′-7″	5′-10″	5′-2″	8′-3″	7′-4″	6′-6″	5′-9″	5′-1″

For SI: 1 inch = 25.4 mm, 1 foot = 304.8 mm, 1 pound per square foot = 0.0479 kPa, 1 pound per square inch = 6.895 kPa, 1 Ksi = 1,000 psi = 6.895 MPa.

a. Deflection criterion: *L*/360 for live loads, *L*/240 for total loads.

b. Design load assumptions:
Second floor dead load is 10 psf.
Roof/ceiling dead load is 12 psf.
Second floor live load is 40 psf.
Third floor live load is 30 psf.
Attic live load is 10 psf.

c. Building width is in the direction of horizontal framing members supported by the header.

TABLE R603.6(10)
BOX-BEAM HEADER SPANS
Headers Supporting Two Floors, Roof and Ceiling
(50 Ksi steel)[a, b]

MEMBER DESIGNATION	GROUND SNOW LOAD (20 psf)					GROUND SNOW LOAD (30 psf)				
	Building width[c] (feet)					Building width[c] (feet)				
	24	28	32	36	40	24	28	32	36	40
2-350S162-33	—	—	—	—	—	—	—	—	—	—
2-350S162-43	—	—	—	—	—	—	—	—	—	—
2-350S162-54	2′-5″	—	—	—	—	2′-4″	—	—	—	—
2-350S162-68	3′-6″	3′-0″	2′-6″	2′-1″	—	3′-5″	2′-11″	2′-6″	2′-0″	—
2-350S162-97	4′-9″	4′-6″	4′-1″	3′-8″	3′-4″	4′-8″	4′-5″	4′-0″	3′-8″	3′-4″
2-550S162-33	—	—	—	—	—	—	—	—	—	—
2-550S162-43	2′-7″	—	—	—	—	2′-6″	—	—	—	—
2-550S162-54	3′-11″	3′-3″	2′-8″	2′-0″	—	3′-10″	3′-3″	2′-7″	—	—
2-550S162-68	5′-1″	4′-5″	3′-10″	3′-3″	2′-9″	5′-0″	4′-4″	3′-9″	3′-3″	2′-9″
2-550S162-97	6′-10″	6′-5″	5′-10″	5′-5″	4′-11″	6′-9″	6′-4″	5′-10″	5′-4″	4′-11″
2-800S162-33	—	—	—	—	—	—	—	—	—	—
2-800S162-43	3′-1″	2′-3″	—	—	—	3′-0″	2′-2″	—	—	—
2-800S162-54	4′-7″	3′-10″	3′-1″	2′-5″	—	4′-6″	3′-9″	3′-0″	2′-4″	—
2-800S162-68	6′-0″	5′-3″	4′-7″	3′-11″	3′-4″	6′-0″	5′-2″	4′-6″	3′-11″	3′-3″
2-800S162-97	9′-2″	8′-4″	7′-8″	7′-0″	6′-6″	9′-1″	8′-3″	7′-7″	7′-0″	6′-5″
2-1000S162-43	2′-6″	2′-2″	—	—	—	2′-6″	2′-2″	—	—	—
2-1000S162-54	5′-0″	4′-4″	3′-6″	2′-9″	—	4′-11″	4′-3″	3′-5″	2′-7″	—
2-1000S162-68	6′-10″	6′-0″	5′-3″	4′-6″	3′-10″	6′-9″	5′-11″	5′-2″	4′-5″	3′-9″
2-1000S162-97	10′-0″	9′-1″	8′-3″	7′-8″	7′-0″	9′-10″	9′-0″	8′-3″	7′-7″	7′-0″
2-1200S162-54	4′-2″	3′-7″	3′-3″	2′-11″	—	4′-1″	3′-7″	3′-2″	2′-10″	—
2-1200S162-68	7′-7″	6′-7″	5′-9″	5′-0″	4′-2″	7′-6″	6′-6″	5′-8″	4′-10″	4′-1″
2-1200S162-97	11′-2″	10′-1″	9′-3″	8′-6″	7′-10″	11′-0″	10′-0″	9′-2″	9′-2″	7′-9″

For SI: 1 inch = 25.4 mm, 1 foot = 304.8 mm, 1 pound per square foot = 0.0479 kPa, 1 pound per square inch = 6.895 kPa, 1 Ksi = 1,000 psi = 6.895 MPa.

a. Deflection criterion: *L*/360 for live loads, *L*/240 for total loads.

b. Design load assumptions:
Second floor dead load is 10 psf.
Roof/ceiling dead load is 12 psf.
Second floor live load is 40 psf.
Third floor live load is 30 psf.
Attic live load is 10 psf.

c. Building width is in the direction of horizontal framing members supported by the header.

TABLE R603.6(11)
BOX-BEAM HEADER SPANS
Headers Supporting Two Floors, Roof and Ceiling
(33 Ksi steel)[a, b]

MEMBER DESIGNATION	GROUND SNOW LOAD (50 psf)					GROUND SNOW LOAD (70 psf)				
	Building width[c] (feet)					Building width[c] (feet)				
	24	28	32	36	40	24	28	32	36	40
2-350S162-33	—	—	—	—	—	—	—	—	—	—
2-350S162-43	—	—	—	—	—	—	—	—	—	—
2-350S162-54	—	—	—	—	—	—	—	—	—	—
2-350S162-68	—	—	—	—	—	—	—	—	—	—
2-350S162-97	2′-11″	2′-5″	2′-0″	—	—	2′-7″	2′-2″	—	—	—
2-550S162-33	—	—	—	—	—	—	—	—	—	—
2-550S162-43	—	—	—	—	—	—	—	—	—	—
2-550S162-54	—	—	—	—	—	—	—	—	—	—
2-550S162-68	2′-5″	—	—	—	—	—	—	—	—	—
2-550S162-97	4′-4″	3′-10″	3′-4″	2′-10″	2′-5″	4′-0″	3′-6″	3′-1″	2′-7″	2′-2″
2-800S162-33	—	—	—	—	—	—	—	—	—	—
2-800S162-43	—	—	—	—	—	—	—	—	—	—
2-800S162-54	—	—	—	—	—	—	—	—	—	—
2-800S162-68	3′-3″	2′-3″	—	—	—	2′-8″	—	—	—	—
2-800S162-97	5′-11″	5′-2″	4′-6″	4′-0″	3′-5″	5′-6″	4′-10″	4′-3″	3′-8″	3′-2″
2-1000S162-43	—	—	—	—	—	—	—	—	—	—
2-1000S162-54	—	—	—	—	—	—	—	—	—	—
2-1000S162-68	3′-9″	2′-7″	—	—	—	3′-1″	—	—	—	—
2-1000S162-97	7′-0″	6′-2″	5′-5″	4′-9″	4′-2″	6′-6″	5′-9″	5′-1″	4′-5″	3′-10″
2-1200S162-54	—	—	—	—	—	—	—	—	—	—
2-1200S162-68	4′-2″	2′-10″	—	—	—	3′-5″	2′-0″	—	—	—
2-1200S162-97	7′-11″	7′-0″	6′-2″	5′-5″	4′-8″	7′-4″	6′-6″	5′-9″	5′-0″	4′-4″

For SI: 1 inch = 25.4 mm, 1 foot = 304.8 mm, 1 pound per square foot = 0.0479 kPa, 1 pound per square inch = 6.895 kPa, 1 Ksi = 1,000 psi = 6.895 MPa.

a. Deflection criterion: *L*/360 for live loads, *L*/240 for total loads.

b. Design load assumptions:
Second floor dead load is 10 psf.
Roof/ceiling dead load is 12 psf.
Second floor live load is 40 psf.
Third floor live load is 30 psf.
Attic live load is 10 psf.

c. Building width is in the direction of horizontal framing members supported by the header.

TABLE R603.6(12)
BOX-BEAM HEADER SPANS
Headers Supporting Two Floors, Roof and Ceiling
(50 Ksi steel)[a,b]

MEMBER DESIGNATION	GROUND SNOW LOAD (50 psf)					GROUND SNOW LOAD (70 psf)				
	Building width[c] (feet)					Building width[c] (feet)				
	24	28	32	36	40	24	28	32	36	40
2-350S162-33	—	—	—	—	—	—	—	—	—	—
2-350S162-43	—	—	—	—	—	—	—	—	—	—
2-350S162-54	2′-2″	—	—	—	—	—	—	—	—	—
2-350S162-68	3′-3″	2′-9″	2′-3″	—	—	2′-11″	2′-5″	—	—	—
2-350S162-97	4′-6″	4′-3″	3′-10″	3′-6″	3′-2″	4′-3″	4′-0″	3′-7″	3′-3″	3′-0″
2-550S162-33	—	—	—	—	—	—	—	—	—	—
2-550S162-43	2′-3″	—	—	—	—	—	—	—	—	—
2-550S162-54	3′-7″	2′-11″	2′-3″	—	—	3′-3″	2′-7″	—	—	—
2-550S162-68	4′-9″	2′-1″	3′-6″	3′-0″	2′-5″	4′-4″	3′-9″	3′-2″	2′-8″	2′-1″
2-550S162-97	6′-5″	6′-1″	5′-7″	5′-1″	4′-8″	6′-3″	5′-10″	5′-4″	4′-10″	4′-5″
2-800S162-33	—	—	—	—	—	—	—	—	—	—
2-800S162-43	2′-8″	—	—	—	—	2′-2″	—	—	—	—
2-800S162-54	4′-3″	3′-5″	2′-8″	—	—	3′-9″	3′-0″	2′-3″	—	—
2-800S162-68	5′-8″	4′-11″	4′-2″	3′-7″	2′-11″	5′-3″	4′-6″	3′-10″	3′-3″	2′-7″
2-800S162-97	8′-9″	8′-0″	7′-3″	6′-8″	6′-2″	8′-4″	7′-7″	6′-11″	6′-4″	5′-10″
2-1000S162-43	2′-4″	2′-0″	—	—	—	2′-2″	—	—	—	—
2-1000S162-54	4′-8″	3′-11″	3′-1″	2′-2″	—	4′-3″	3′-5″	2′-7″	—	—
2-1000S162-68	6′-5″	5′-7″	4′-9″	4′-1″	3′-4″	5′-11″	5′-1″	4′-5″	3′-8″	2′-11″
2-1000S162-97	9′-6″	8′-8″	7′-11″	7′-3″	6′-8″	9′-0″	8′-3″	7′-6″	6′-11″	6′-4″
2-1200S162-54	3′-11″	3′-5″	3′-0″	2′-4″	—	3′-7″	3′-2″	2′-10″	—	—
2-1200S162-68	7′-1″	6′-2″	5′-3″	4′-6″	3′-8″	6′-6″	5′-8″	4′-10″	4′-0″	3′-3″
2-1200S162-97	10′-8″	9′-8″	8′-10″	8′-1″	7′-5″	10′-1″	9′-2″	8′-5″	7′-9″	7′-1″

For SI: 1 inch = 25.4 mm, 1 foot = 304.8 mm, 1 pound per square foot = 0.0479 kPa, 1 pound per square inch = 6.895 kPa, 1 Ksi = 1,000 psi = 6.895 MPa.

a. Deflection criterion: *L*/360 for live loads, *L*/240 for total loads.

b. Design load assumptions:
Second floor dead load is 10 psf.
Roof/ceiling dead load is 12 psf.
Second floor live load is 40 psf.
Third floor live load is 30 psf.
Attic live load is 10 psf.

c. Building width is in the direction of horizontal framing members supported by the header.

TABLE R603.6(13)
BACK-TO-BACK HEADER SPANS
Headers Supporting Roof and Ceiling Only
(33 Ksi steel)[a,b]

MEMBER DESIGNATION	GROUND SNOW LOAD (20 psf)					GROUND SNOW LOAD (30 psf)				
	Building width[c] (feet)					Building width[c] (feet)				
	24	28	32	36	40	24	28	32	36	40
2-350S162-33	2′-11″	2′-4″	—	—	—	2′-5″	—	—	—	—
2-350S162-43	4′-8″	3′-10″	3′-5″	3′-1″	2′-9″	3′-11″	3′-5″	3′-0″	2′-8″	2′-4″
2-350S162-54	5′-3″	4′-9″	4′-4″	4′-1″	3′-8″	4′-10″	4′-4″	4′-0″	3′-8″	3′-4″
2-350S162-68	6′-1″	5′-7″	5′-2″	4′-10″	4′-6″	5′-8″	5′-3″	4′-10″	4′-6″	4′-2″
2-350S162-97	7′-3″	6′-10″	6′-5″	6′-0″	5′-8″	6′-11″	6′-5″	6′-0″	5′-8″	5′-4″
2-550S162-33	4′-5″	3′-9″	3′-1″	2′-6″	—	3′-9″	3′-2″	2′-6″	—	—
2-550S162-43	6′-2″	5′-7″	5′-0″	4′-7″	4′-2″	5′-7″	5′-0″	4′-6″	4′-1″	3′-8″
2-550S162-54	7′-5″	6′-9″	6′-3″	5′-9″	5′-4″	6′-10″	6′-3″	5′-9″	5′-4″	4′-11″
2-550S162-68	6′-7″	7′-11″	7′-4″	6′-10″	6′-5″	8′-0″	7′-4″	6′-10″	6′-5″	6′-0″
2-550S162-97	10′-5″	9′-8″	9′-0″	8′-6″	8′-0″	9′-9″	9′-0″	8′-6″	8′-0″	7′-7″
2-800S162-33	4′-5″	3′-11″	3′-5″	3′-1″	2′-4″	3′-11″	3′-6″	3′-0″	2′-3″	—
2-800S162-43	7′-7″	6′-10″	6′-2″	5′-8″	5′-2″	6′-11″	6′-2″	5′-7″	5′-1″	4′-7″
2-800S162-54	9′-3″	8′-7″	7′-11″	7′-4″	6′-10″	8′-8″	7′-11″	7′-4″	6′-9″	6′-3″
2-800S162-68	10′-7″	9′-10″	9′-4″	8′-10″	8′-5″	9′-11″	9′-4″	8′-10″	8′-4″	7′-11″
2-800S162-97	13′-9″	12′-9″	12′-0″	11′-3″	10′-8″	12′-10″	12′-0″	11′-3″	10′-7″	10′-0″
2-1000S162-43	7′-10″	6′-10″	6′-1″	5′-6″	5′-0″	6′-11″	6′-1″	5′-5″	4′-11″	4′-6″
2-1000S162-54	10′-5″	9′-9″	9′-0″	8′-4″	7′-9″	9′-10″	9′-0″	8′-4″	7′-9″	7′-2″
2-1000S162-68	12′-1″	11′-3″	10′-8″	10′-1″	9′-7″	11′-4″	10′-8″	10′-1″	9′-7″	9′-1″
2-1000S162-97	15′-3″	14′-3″	13′-5″	12′-9″	12′-2″	14′-4″	13′-5″	12′-8″	12′-1″	11′-6″
2-1200S162-54	11′-6″	10′-9″	10′-0″	9′-0″	8′-2″	10′-10″	10′-0″	9′-0″	8′-1″	7′-4″
2-1200S162-68	13′-4″	12′-6″	11′-9″	11′-2″	10′-8″	12′-7″	11′-10″	11′-2″	10′-7″	10′-1″
2-1200S162-97	16′-8″	15′-7″	14′-8″	13′-11″	13′-3″	15′-8″	14′-8″	13′-11″	13′-2″	12′-7″

For SI: 1 inch = 25.4 mm, 1 foot = 304.8 mm, 1 pound per square foot = 0.0479 kPa, 1 pound per square inch = 6.895 kPa, 1 Ksi = 1,000 psi = 6.895 MPa.

a. Deflection criterion: *L*/360 for live loads, *L*/240 for total loads.

b. Design load assumptions:
Second floor dead load is 12 psf.
Attic live load is 10 psf.

c. Building width is in the direction of horizontal framing members supported by header.

TABLE R603.6(14)
BACK-TO-BACK HEADER SPANS
Headers Supporting Roof and Ceiling Only
(50 Ksi steel)[a,b]

MEMBER DESIGNATION	GROUND SNOW LOAD (20 psf)					GROUND SNOW LOAD (30 psf)				
	Building width[c] (feet)					Building width[c] (feet)				
	24	28	32	36	40	24	28	32	36	40
2-350S162-33	4′-2″	3′-8″	3′-3″	2′-10″	2′-6″	3′-8″	3′-3″	2′-10″	2′-5″	2′-1″
2-350S162-43	5′-5″	5′-0″	4′-6″	4′-2″	3′-10″	5′-0″	4′-7″	4′-2″	3′-10″	3′-6″
2-350S162-54	6′-2″	5′-10″	5′-8″	5′-4″	5′-0″	5′-11″	5′-8″	5′-4″	5′-0″	4′-8″
2-350S162-68	6′-7″	6′-3″	6′-0″	5′-10″	5′-8″	6′-4″	6′-1″	5′-10″	5′-8″	5′-6″
2-350S162-97	7′-3″	6′-11″	6′-8″	6′-5″	6′-3″	7′-0″	6′-8″	6′-5″	6′-3″	6′-0″
2-550S162-33	5′-10″	5′-3″	4′-8″	4′-3″	3′-9″	5′-3″	4′-9″	4′-2″	3′-9″	3′-3″
2-550S162-43	7′-9″	7′-2″	6′-7″	6′-1″	5′-8″	7′-3″	6′-7″	6′-1″	5′-8″	5′-3″
2-550S162-54	8′-9″	8′-5″	8′-1″	7′-9″	7′-5″	8′-6″	8′-1″	7′-9″	7′-5″	6′-11″
2-550S162-68	9′-5″	9′-0″	8′-8″	8′-4″	8′-1″	9′-1″	8′-8″	8′-4″	8′-1″	7′-10″
2-550S162-97	10′-5″	10′-0″	9′-7″	9′-3″	9′-0″	10′-0″	9′-7″	9′-3″	8′-11″	8′-8″
2-800S162-33	4′-5″	3′-11″	3′-5″	3′-1″	2′-10″	3′-11″	3′-6″	3′-1″	2′-9″	2′-6″
2-800S162-43	9′-1″	8′-5″	7′-8″	6′-11″	6′-3″	8′-6″	7′-8″	6′-10″	6′-2″	5′-8″
2-800S162-54	10′-10″	10′-2″	9′-7″	9′-1″	8′-8″	10′-2″	9′-7″	9′-0″	8′-7″	8′-1″
2-800S162-68	12′-8″	11′-10″	11′-2″	10′-7″	10′-1″	11′-11″	11′-2″	10′-7″	10′-0″	9′-7″
2-800S162-97	14′-2″	13′-6″	13′-0″	12′-7″	12′-2″	13′-8″	13′-1″	12′-7″	12′-2″	11′-9″
2-1000S162-43	7′-10″	6′-10″	6′-1″	5′-6″	5′-0″	6′-11″	6′-1″	5′-5″	4′-11″	4′-6″
2-1000S162-54	12′-3″	11′-5″	10′-9″	10′-3″	9′-9″	11′-6″	10′-9″	10′-2″	9′-8″	8′-11″
2-1000S162-68	14′-5″	13′-5″	12′-8″	12′-0″	11′-6″	13′-6″	12′-8″	12′-0″	11′-5″	10′-11″
2-1000S162-97	17′-1″	16′-4″	15′-8″	14′-11″	14′-3″	16′-5″	15′-9″	14′-10″	14′-1″	13′-6″
2-1200S162-54	12′-11″	11′-3″	10′-0″	9′-0″	8′-2″	11′-5″	10′-0″	9′-0″	8′-1″	7′-4″
2-1200S162-68	15′-11″	14′-10″	14′-0″	13′-4″	12′-8″	15′-0″	14′-0″	13′-3″	12′-7″	12′-0″
2-1200S162-97	19′-11″	18′-7″	17′-6″	16′-8″	15′-10″	18′-9″	17′-7″	16′-7″	15′-9″	15′-0″

For SI: 1 inch = 25.4 mm, 1 foot = 304.8 mm, 1 pound per square foot = 0.0479 kPa, 1 pound per square inch = 6.895 kPa, 1 Ksi = 1,000 psi = 6.895 MPa.

a. Deflection criterion: *L*/360 for live loads, *L*/240 for total loads.

b. Design load assumptions:
Roof/ceiling dead load is 12 psf.
Attic live load is 10 psf.

c. Building width is in the direction of horizontal framing members supported by the header.

TABLE R603.6(15)
BACK-TO-BACK HEADER SPANS
Headers Supporting Roof and Ceiling Only
(33 Ksi steel)[a, b]

MEMBER DESIGNATION	GROUND SNOW LOAD (50 psf)					GROUND SNOW LOAD (70 psf)				
	Building width[c] (feet)					Building width[c] (feet)				
	24	28	32	36	40	24	28	32	36	40
2-350S162-33	—	—	—	—	—	—	—	—	—	—
2-350S162-43	2′-6″	—	—	—	—	—	—	—	—	—
2-350S162-54	3′-6″	3′-1″	2′-8″	2′-4″	2′-0″	2′-7″	2′-1″	—	—	—
2-350S162-68	4′-4″	3′-11″	3′-7″	3′-3″	2′-11″	3′-5″	3′-0″	2′-8″	2′-4″	2′-1″
2-350S162-97	5′-5″	5′-0″	4′-8″	4′-6″	4′-1″	4′-6″	4′-2″	3′-10″	3′-6″	3′-3″
2-550S162-33	—	—	—	—	—	—	—	—	—	—
2-550S162-43	3′-10″	3′-3″	2′-9″	2′-2″	—	2′-6″	—	—	—	—
2-550S162-54	5′-1″	4′-7″	4′-1″	3′-8″	3′-4″	3′-11″	3′-5″	2′-11″	2′-6″	2′-0″
2-550S162-68	6′-2″	5′-8″	5′-2″	4′-9″	4′-5″	5′-0″	4′-6″	4′-1″	3′-9″	3′-4″
2-550S162-97	7′-9″	7′-2″	6′-8″	6′-3″	5′-11″	6′-6″	6′-0″	5′-7″	5′-2″	4′-10″
2-800S162-33	—	—	—	—	—	—	—	—	—	—
2-800S162-43	4′-10″	4′-1″	3′-6″	2′-11″	2′-3″	3′-3″	2′-5″	—	—	—
2-800S162-54	6′-6″	5′-10″	5′-3″	4′-9″	4′-4″	5′-1″	4′-6″	3′-11″	3′-4″	2′-10″
2-800S162-68	8′-1″	7′-5″	6′-10″	6′-4″	5′-11″	6′-8″	6′-1″	5′-6″	5′-0″	4′-7″
2-800S162-97	10′-3″	9′-7″	8′-11″	8′-5″	7′-11″	8′-8″	8′-0″	7′-6″	7′-0″	6′-7″
2-1000S162-43	4′-8″	4′-1″	3′-8″	3′-4″	2′-8″	3′-6″	2′-10″	—	—	—
2-1000S162-54	7′-5″	6′-8″	6′-1″	5′-6″	5′-0″	5′-10″	5′-1″	4′-6″	3′-11″	3′-4″
2-1000S162-68	9′-4″	8′-7″	7′-11″	7′-4″	6′-10″	7′-8″	7′-0″	6′-4″	5′-10″	5′-4″
2-1000S162-97	11′-9″	11′-0″	10′-5″	9′-11″	9′-5″	10′-3″	9′-7″	8′-11″	8′-4″	7′-10″
2-1200S162-54	7′-8″	6′-9″	6′-1″	5′-6″	5′-0″	5′-10″	5′-1″	4′-7″	4′-1″	3′-9″
2-1200S162-68	10′-4″	9′-6″	8′-10″	8′-2″	7′-7″	8′-7″	7′-9″	7′-1″	6′-6″	6′-0″
2-1200S162-97	12′-10″	12′-1″	11′-5″	10′-10″	10′-4″	11′-2″	10′-6″	9′-11″	9′-5″	9′-0″

For SI: 1 inch = 25.4 mm, 1 foot = 304.8 mm, 1 pound per square foot = 0.0479 kPa, 1 pound per square inch = 6.895 kPa, 1 Ksi = 1,000 psi = 6.895 MPa.

a. Deflection criterion: *L*/360 for live loads, *L*/240 for total loads.

b. Design load assumptions:
Roof/ceiling dead load is 12 psf.
Attic live load is 10 psf.

c. Building width is in the direction of horizontal framing members supported by the header.

TABLE R603.6(16)
BACK-TO-BACK HEADER SPANS
Headers Supporting Roof and Ceiling Only
(50 Ksi steel)[a, b]

MEMBER DESIGNATION	GROUND SNOW LOAD (50 psf)					GROUND SNOW LOAD (70 psf)				
	Building width[c] (feet)					Building width[c] (feet)				
	24	28	32	36	40	24	28	32	36	40
2-350S162-33	2′-3″	—	—	—	—	—	—	—	—	—
2-350S162-43	3′-8″	3′-3″	2′-10″	2′-6″	2′-2″	2′-8″	2′-3″	—	—	—
2-350S162-54	4′-9″	4′-4″	4′-0″	3′-8″	3′-8″	3′-10″	3′-5″	3′-1″	2′-9″	2′-5″
2-350S162-68	5′-7″	5′-4″	5′-2″	4′-11″	4′-7″	5′-1″	4′-8″	4′-3″	3′-11″	3′-8″
2-350S162-97	6′-2″	5′-11″	5′-8″	5′-6″	5′-4″	5′-8″	5′-5″	5′-3″	5′-0″	4′-11″
2-550S162-33	3′-6″	2′-10″	2′-3″	—	—	2′-0″	—	—	—	—
2-550S162-43	5′-5″	4′-10″	4′-4″	3′-11″	3′-6″	4′-2″	3′-8″	3′-2″	2′-8″	2′-3″
2-550S162-54	7′-2″	6′-6″	6′-0″	5′-7″	5′-2″	5′-10″	5′-3″	4′-10″	4′-5″	4′-0″
2-550S162-68	8′-0″	7′-8″	7′-3″	6′-11″	6′-6″	7′-2″	6′-7″	6′-1″	5′-8″	5′-4″
2-550S162-97	8′-11″	8′-6″	8′-2″	7′-11″	7′-8″	8′-1″	7′-9″	7′-6″	7′-2″	6′-11″
2-800S162-33	2′-8″	2′-4″	2′-1″	1′-11″	—	2′-0″	—	—	—	—
2-800S162-43	5′-10″	5′-2″	4′-7″	4′-2″	3′-10″	4′-5″	3′-11″	3′-6″	3′-2″	2′-9″
2-800S162-54	8′-4″	7′-8″	7′-1″	6′-7″	6′-1″	6′-10″	6′-3″	5′-8″	5′-2″	4′-9″
2-800S162-68	9′-9″	9′-2″	8′-8″	8′-3″	7′-10″	8′-6″	7′-11″	7′-4″	6′-10″	6′-5″
2-800S162-97	12′-1″	11′-7″	11′-2″	10′-8″	10′-2″	11′-0″	10′-4″	9′-9″	9′-3″	8′-10″
2-1000S162-43	4′-8″	4′-1″	2′-8″	3′-4″	3′-0″	3′-6″	10′-1″	2′-9″	2′-6″	2′-3″
2-1000S162-54	9′-3″	8′-2″	7′-3″	6′-7″	6′-0″	7′-0″	6′-2″	5′-6″	5′-0″	4′-6″
2-1000S162-68	11′-1″	10′-5″	9′-10″	9′-4″	8′-11″	9′-8″	9′-1″	8′-5″	7′-10″	7′-4″
2-1000S162-97	13′-9″	12′-11″	12′-2″	11′-7″	11′-1″	11′-11″	11′-3″	10′-7″	10′-1″	9′-7″
2-1200S162-54	7′-8″	6′-9″	6′-1″	5′-6″	5′-0″	5′-10″	5′-1″	4′-7″	4′-1″	3′-9″
2-1200S162-68	12′-3″	11′-6″	10′-11″	10′-4″	9′-11″	10′-8″	10′-0″	9′-2″	8′-4″	7′-7″
2-1200S162-97	15′-4″	14′-5″	13′-7″	12′-11″	12′-4″	13′-4″	12′-6″	11′-10″	11′-3″	10′-9″

For SI: 1 inch = 25.4 mm, 1 foot = 304.8 mm, 1 pound per square foot = 0.0479 kPa, 1 pound per square inch = 6.895 kPa, 1 Ksi = 1,000 psi = 6.895 MPa.

a. Deflection criterion: *L*/360 for live loads, *L*/240 for total loads.

b. Design load assumptions:
Roof/ceiling dead load is 12 psf.
Attic live load is 10 psf.

c. Building width is in the direction of horizontal framing members supported by the header.

TABLE R603.6(17)
BACK-TO-BACK HEADER SPANS
Headers Supporting One Floor, Roof and Ceiling
(33 Ksi steel)[a, b]

MEMBER DESIGNATION	GROUND SNOW LOAD (20 psf)					GROUND SNOW LOAD (30 psf)				
	Building width[c] (feet)					Building width[c] (feet)				
	24	28	32	36	40	24	28	32	36	40
2-350S162-33	—	—	—	—	—	—	—	—	—	—
2-350S162-43	2′-2″	—	—	—	—	2′-1″	—	—	—	—
2-350S162-54	3′-3″	2′-9″	2′-5″	2′-0″	—	3′-2″	2′-9″	2′-4″	—	—
2-350S162-68	4′-4″	3′-8″	3′-3″	2′-11″	2′-8″	4′-0″	3′-7″	3′-2″	2′-11″	2′-7″
2-350S162-97	5′-2″	4′-9″	4′-4″	4′-1″	3′-9″	5′-1″	4′-8″	4′-4″	4′-0″	3′-9″
2-550S162-33	—	—	—	—	—	—	—	—	—	—
2-550S162-43	3′-6″	2′-10″	2′-3″	—	—	3′-5″	2′-9″	2′-2″	—	—
2-550S162-54	4′-9″	4′-2″	3′-9″	3′-3″	2′-10″	4′-8″	4′-1″	3′-8″	3′-2″	2′-9″
2-550S162-68	5′-10″	5′-3″	4′-10″	4′-5″	4′-1″	5′-9″	5′-3″	4′-9″	4′-4″	4′-0″
2-550S162-97	7′-4″	6′-9″	6′-4″	5′-11″	5′-6″	7′-3″	6′-9″	6′-3″	5′-10″	5′-5″
2-800S162-33	—	—	—	—	—	—	—	—	—	—
2-800S162-43	4′-4″	3′-8″	2′-11″	2′-3″	—	4′-3″	3′-6″	2′-10″	2′-1″	—
2-800S162-54	6′-1″	5′-5″	4′-10″	4′-4″	3′-10″	6′-0″	5′-4″	4′-9″	4′-3″	3′-9″
2-800S162-68	7′-8″	7′-0″	6′-5″	5′-11″	5′-5″	7′-7″	6′-11″	6′-4″	5′-10″	5′-4″
2-800S162-97	9′-10″	9′-1″	8′-5″	7′-11″	7′-5″	9′-8″	8′-11″	8′-4″	7′-10″	7′-4″
2-1000S162-43	4′-4″	3′-9″	3′-4″	2′-8″	—	4′-3″	3′-8″	3′-3″	2′-6″	—
2-1000S162-54	6′-11″	6′-2″	5′-6″	5′-0″	4′-5″	6′-10″	6′-1″	5′-5″	4′-10″	4′-4″
2-1000S162-68	8′-10″	8′-1″	7′-5″	6′-10″	6′-4″	8′-8″	7′-11″	7′-3″	6′-8″	6′-2″
2-1000S162-97	11′-3″	10′-7″	9′-11″	9′-5″	8′-10″	11′-2″	10′-5″	9′-10″	9′-3″	8′-9″
2-1200S162-54	7′-1″	6′-2″	5′-6″	5′-0″	4′-6″	6′-11″	6′-1″	5′-5″	4′-10″	4′-5″
2-1200S162-68	9′-10″	9′-0″	8′-3″	7′-7″	7′-0″	9′-8″	8′-10″	8′-1″	7′-6″	6′-11″
2-1200S162-97	12′-4″	11′-7″	10′-11″	10′-4″	9′-10″	12′-3″	11′-5″	10′-9″	10′-3″	9′-9″

For SI: 1 inch = 25.4 mm, 1 foot = 304.8 mm, 1 pound per square foot = 0.0479 kPa, 1 pound per square inch = 6.895 kPa, 1 Ksi = 1,000 psi = 6.895 MPa.

a. Deflection criterion: *L*/360 for live loads, *L*/240 for total loads.

b. Design load assumptions:
Second floor dead load is 10 psf.
Roof/ceiling dead load is 12 psf.
Second floor live load is 30 psf.
Attic live load is 10 psf.

c. Building width is in the direction of horizontal framing members supported by the header.

TABLE R603.6(18)
BACK-TO-BACK HEADER SPANS
Headers Supporting One Floor, Roof and Ceiling
(50 Ksi steel)[a, b]

MEMBER DESIGNATION	GROUND SNOW LOAD (20 psf)					GROUND SNOW LOAD (30 psf)				
	Building width[c] (feet)					Building width[c] (feet)				
	24	28	32	36	40	24	28	32	36	40
2-350S162-33	—	—	—	—	—	—	—	—	—	—
2-350S162-43	3′-4″	2′-11″	2′-6″	2′-2″	—	3′-3″	2′-10″	2′-5″	2′-1″	—
2-350S162-54	4′-6″	4′-1″	3′-8″	3′-4″	3′-0″	4′-5″	4′-0″	3′-7″	3′-3″	2′-11″
2-350S162-68	5′-0″	4′-9″	4′-7″	4′-5″	4′-3″	4′-11″	4′-8″	4′-6″	4′-4″	4′-2″
2-350S162-97	5′-6″	5′-3″	5′-1″	4′-11″	4′-9″	5′-5″	5′-2″	5′-0″	4′-10″	4′-8″
2-550S162-33	3′-1″	2′-5″	—	—	—	3′-0″	2′-3″	—	—	—
2-550S162-43	5′-1″	4′-6″	4′-0″	3′-6″	3′-1″	4′-11″	4′-5″	3′-11″	3′-5″	3′-0″
2-550S162-54	6′-8″	6′-2″	5′-7″	5′-2″	4′-9″	6′-6″	6′-0″	5′-6″	5′-1″	4′-8″
2-550S162-68	7′-2″	6′-10″	6′-7″	6′-4″	6′-1″	7′-0″	6′-9″	6′-6″	6′-3″	6′-0″
2-550S162-97	7′-11″	7′-7″	7′-3″	7′-0″	6′-10″	7′-9″	7′-5″	7′-2″	6′-11″	6′-9″
2-800S162-33	2′-5″	2′-2″	1′-11″	—	—	2′-5″	2′-1″	1′-10″	—	—
2-800S162-43	5′-5″	4′-9″	4′-3″	3′-9″	3′-5″	5′-3″	4′-8″	4′-1″	3′-9″	3′-5″
2-800S162-54	7′-11″	7′-2″	6′-7″	6′-1″	5′-7″	7′-9″	7′-1″	6′-6″	6′-0″	5′-6″
2-800S162-68	9′-5″	8′-9″	8′-3″	7′-9″	7′-4″	9′-3″	8′-8″	8′-2″	7′-8″	7′-3″
2-800S162-97	10′-9″	10′-3″	9′-11″	9′-7″	9′-3″	10′-7″	10′-1″	9′-9″	9′-5″	9′-1″
2-1000S162-43	4′-4″	3′-9″	3′-4″	3′-0″	2′-9″	4′-3″	3′-8″	3′-3″	2′-11″	2′-8″
2-1000S162-54	8′-6″	7′-5″	6′-8″	6′-0″	5′-5″	8′-4″	7′-4″	6′-6″	5′-10″	5′-4″
2-1000S162-68	10′-8″	10′-0″	9′-5″	8′-11″	8′-4″	10′-7″	9′-10″	9′-4″	8′-9″	8′-3″
2-1000S162-97	12′-11″	12′-4″	11′-8″	11′-1″	10′-6″	12′-9″	12′-2″	11′-6″	10′-11″	10′-5″
2-1200S162-54	7′-1″	6′-2″	5′-6″	5′-0″	4′-6″	6′-11″	6′-1″	5′-5″	4′-10″	4′-5″
2-1200S162-68	11′-9″	11′-0″	10′-5″	9′-10″	9′-1″	11′-8″	10′-11″	10′-3″	9′-9″	8′-11″
2-1200S162-97	14′-9″	13′-9″	13′-0″	12′-4″	11′-9″	14′-7″	13′-8″	12′-10″	12′-3″	11′-8″

For SI: 1 inch = 25.4 mm, 1 foot = 304.8 mm, 1 pound per square foot = 0.0479 kPa, 1 pound per square inch = 6.895 kPa, 1 Ksi = 1,000 psi = 6.895 MPa.

a. Deflection criterion: *L*/360 for live loads, *L*/240 for total loads.

b. Design load assumptions:
Second floor dead load is 10 psf.
Roof/ceiling dead load is 12 psf.
Second floor live load is 30 psf.
Attic live load is 10 psf.

c. Building width is in the direction of horizontal framing members supported by the header.

TABLE R603.6(19)
BACK-TO-BACK HEADER SPANS
Headers Supporting One Floor, Roof and Ceiling
(33 Ksi steel)[a, b]

MEMBER DESIGNATION	GROUND SNOW LOAD (50 psf)					GROUND SNOW LOAD (70 psf)				
	Building width[c] (feet)					Building width[c] (feet)				
	24	28	32	36	40	24	28	32	36	40
2-350S162-33	—	—	—	—	—	—	—	—	—	—
2-350S162-43	—	—	—	—	—	—	—	—	—	—
2-350S162-54	2′-4″	—	—	—	—	—	—	—	—	—
2-350S162-68	3′-3″	2′-10″	2′-6″	2′-2″	—	2′-7″	2′-2″	—	—	—
2-350S162-97	4′-4″	4′-0″	3′-8″	3′-4″	3′-1″	3′-9″	3′-4″	3′-1″	2′-9″	2′-6″
2-550S162-33	—	—	—	—	—	—	—	—	—	—
2-550S162-43	2′-2″	—	—	—	—	—	—	—	—	—
2-550S162-54	3′-8″	3′-2″	2′-8″	2′-3″	—	2′-10″	2′-3″	—	—	—
2-550S162-68	4′-9″	4′-4″	3′-11″	3′-6″	3′-2″	4′-0″	3′-6″	3′-1″	2′-9″	2′-4″
2-550S162-97	6′-3″	5′-9″	5′-4″	5′-0″	4′-8″	5′-6″	5′-0″	4′-7″	4′-3″	3′-11″
2-800S162-33	—	—	—	—	—	—	—	—	—	—
2-800S162-43	2′-11″	2′-0″	—	—	—	—	—	—	—	—
2-800S162-54	4′-9″	4′-2″	3′-7″	3′-1″	2′-7″	3′-9″	3′-1″	2′-5″	—	—
2-800S162-68	6′-4″	5′-9″	5′-3″	4′-9″	4′-4″	5′-4″	4′-9″	4′-3″	3′-10″	3′-4″
2-800S162-97	8′-5″	7′-9″	7′-3″	6′-9″	6′-4″	7′-4″	6′-9″	6′-3″	5′-10″	5′-5″
2-1000S162-43	3′-4″	2′-5″	—	—	—	—	—	—	—	—
2-1000S162-54	5′-6″	4′-10″	4′-2″	3′-7″	3′-0″	4′-4″	3′-7″	2′-11″	2′-2″	—
2-1000S162-68	7′-4″	6′-8″	6′-1″	5′-7″	5′-1″	6′-3″	5′-7″	5′-0″	4′-5″	4′-0″
2-1000S162-97	9′-11″	8′-3″	8′-7″	8′-1″	7′-7″	8′-9″	8′-1″	7′-6″	7′-0″	6′-6″
2-1200S162-54	5′-6″	4′-10″	4′-4″	3′-11″	3′-5″	4′-5″	3′-11″	3′-3″	2′-6″	—
2-1200S162-68	8′-2″	7′-5″	6′-9″	6′-3″	5′-8″	6′-11″	6′-3″	5′-7″	5′-0″	4′-6″
2-1200S162-97	10′-10″	10′-2″	9′-8″	9′-2″	8′-7″	9′-9″	9′-2″	8′-6″	7′-11″	7′-5″

For SI: 1 inch = 25.4 mm, 1 foot = 304.8 mm, 1 pound per square foot = 0.0479 kPa, 1 pound per square inch = 6.895 kPa, 1 Ksi = 1,000 psi = 6.895 MPa.

a. Deflection criterion: *L*/360 for live loads, *L*/240 for total loads.

b. Design load assumptions:
Second floor dead load is 10 psf.
Roof/ceiling dead load is 12 psf.
Second floor live load is 30 psf.
Attic live load is 10 psf.

c. Building width is in the direction of horizontal framing members supported by the header.

TABLE R603.6(20)
BACK-TO-BACK HEADER SPANS
Headers Supporting One Floor, Roof and Ceiling
(50 Ksi steel)[a, b]

MEMBER DESIGNATION	GROUND SNOW LOAD (50 psf)					GROUND SNOW LOAD (70 psf)				
	Building width[c] (feet)					Building width[c] (feet)				
	24	28	32	36	40	24	28	32	36	40
2-350S162-33	—	—	—	—	—	—	—	—	—	—
2-350S162-43	2′-6″	2′-0″	—	—	—	—	—	—	—	—
2-350S162-54	3′-8″	3′-3″	2′-11″	2′-7″	2′-3″	3′-0″	2′-7″	2′-2″	—	—
2-350S162-68	4′-7″	4′-5″	4′-1″	3′-9″	3′-6″	4′-2″	3′-9″	3′-5″	3′-1″	2′-10″
2-350S162-97	5′-1″	4′-10″	4′-8″	4′-6″	4′-5″	4′-10″	4′-7″	4′-5″	4′-3″	4′-1″
2-550S162-33	—	—	—	—	—	—	—	—	—	—
2-550S162-43	3′-11″	3′-5″	2′-11″	2′-5″	—	3′-0″	2′-5″	—	—	—
2-550S162-54	5′-7″	5′-0″	4′-7″	4′-2″	3′-9″	4′-8″	4′-2″	3′-8″	3′-3″	2′-11″
2-550S162-68	6′-7″	6′-4″	5′-11″	5′-6″	5′-1″	6′-0″	5′-6″	5′-0″	4′-7″	4′-3″
2-550S162-97	7′-4″	7′-0″	6′-9″	6′-6″	6′-4″	6′-11″	6′-8″	6′-5″	6′-2″	6′-0″
2-800S162-33	1′-11″	—	—	—	—	—	—	—	—	—
2-800S162-43	4′-2″	3′-8″	3′-4″	3′-0″	2′-6″	3′-5″	3′-0″	2′-4″	—	—
2-800S162-54	6′-7″	5′-11″	5′-5″	4′-11″	4′-6″	5′-6″	4′-11″	4′-5″	3′-11″	3′-6″
2-800S162-68	8′-3″	7′-8″	7′-1″	6′-8″	6′-2″	7′-3″	6′-7″	6′-1″	5′-7″	5′-2″
2-800S162-97	9′-11″	9′-6″	9′-2″	8′-10″	8′-7″	9′-5″	9′-0″	8′-7″	8′-2″	7′-9″
2-1000S162-43	3′-4″	2′-11″	2′-7″	2′-5″	2′-2″	2′-8″	2′-5″	2′-2″	1′-11″	—
2-1000S162-54	6′-7″	5′-10″	5′-3″	4′-9″	4′-4″	5′-4″	4′-9″	4′-3″	3′-10″	3′-6″
2-1000S162-68	9′-4″	8′-9″	8′-1″	7′-7″	7′-1″	8′-3″	7′-7″	6′-11″	6′-5″	5′-11″
2-1000S162-97	11′-7″	10′-11″	10′-4″	9′-10″	9′-5″	10′-5″	9′-10″	9′-3″	8′-10″	8′-5″
2-1200S162-54	5′-6″	4′-10″	4′-4″	3′-11″	3′-7″	4′-5″	3′-11″	3′-6″	3′-2″	2′-11″
2-1200S162-68	10′-4″	9′-8″	8′-8″	7′-11″	7′-2″	8′-11″	7′-11″	7′-1″	6′-5″	5′-10″
2-1200S162-97	12′-11″	12′-2″	11′-6″	11′-0″	10′-6″	11′-8″	11′-0″	10′-5″	9′-10″	9′-5″

For SI: 1 inch = 25.4 mm, 1 foot = 304.8 mm, 1 pound per square foot = 0.0479 kPa, 1 pound per square inch = 6.895 kPa, 1 Ksi = 1,000 psi = 6.895 MPa.

a. Deflection criterion: *L*/360 for live loads, *L*/240 for total loads.

b. Design load assumptions:
Second floor dead load is 10 psf.
Roof/ceiling dead load is 12 psf.
Second floor live load is 30 psf.
Attic live load is 10 psf.

c. Building width is in the direction of horizontal framing members supported by the header.

TABLE R603.6(21)
BACK-TO-BACK HEADER SPANS
Headers Supporting Two Floors, Roof and Ceiling
(33 Ksi steel)[a, b]

MEMBER DESIGNATION	GROUND SNOW LOAD (20 psf)					GROUND SNOW LOAD (30 psf)				
	Building width[c] (feet)					Building width[c] (feet)				
	24	28	32	36	40	24	28	32	36	40
2-350S162-33	—	—	—	—	—	—	—	—	—	—
2-350S162-43	—	—	—	—	—	—	—	—	—	—
2-350S162-54	—	—	—	—	—	—	—	—	—	—
2-350S162-68	2′-5″	—	—	—	—	2′-4″	—	—	—	—
2-350S162-97	3′-6″	3′-2″	2′-10″	2′-6″	2′-3″	3′-6″	3′-1″	2′-9″	2′-6″	2′-3″
2-550S162-33	—	—	—	—	—	—	—	—	—	—
2-550S162-43	—	—	—	—	—	—	—	—	—	—
2-550S162-54	2′-6″	—	—	—	—	2′-5″	—	—	—	—
2-550S162-68	3′-9″	3′-3″	2′-9″	2′-4″	—	3′-8″	3′-2″	2′-9″	2′-4″	—
2-550S162-97	5′-3″	4′-9″	4′-4″	3′-11″	3′-8″	5′-2″	4′-8″	4′-3″	3′-11″	3′-7″
2-800S162-33	—	—	—	—	—	—	—	—	—	—
2-800S162-43	—	—	—	—	—	—	—	—	—	—
2-800S162-54	3′-5″	2′-8″	—	—	—	3′-4″	2′-7″	—	—	—
2-800S162-68	5′-1″	4′-5″	3′-11″	3′-4″	2′-11″	5′-0″	4′-4″	3′-10″	3′-4″	2′-10″
2-800S162-97	7′-0″	6′-5″	5′-11″	5′-5″	5′-0″	7′-0″	6′-4″	5′-10″	5′-5″	5′-0″
2-1000S162-43	—	—	—	—	—	—	—	—	—	—
2-1000S162-54	3′-11″	3′-1″	2′-3″	—	—	3′-10″	3′-0″	2′-2″	—	—
2-1000S162-68	5′-10″	5′-2″	4′-6″	4′-0″	3′-5″	5′-9″	5′-1″	4′-6″	3′-11″	3′-4″
2-1000S162-97	8′-5″	7′-8″	7′-1″	6′-6″	6′-1″	8′-4″	7′-7″	7′-0″	6′-6″	6′-0″
2-1200S162-54	4′-2″	3′-6″	2′-7″	—	—	4′-1″	3′-5″	2′-6″	—	—
2-1200S162-68	6′-6″	5′-9″	5′-1″	4′-6″	3′-11″	6′-6″	5′-8″	5′-0″	4′-5″	3′-10″
2-1200S162-97	9′-5″	8′-8″	8′-0″	7′-5″	6′-11″	9′-5″	8′-7″	7′-11″	7′-4″	6′-10″

For SI: 1 inch = 25.4 mm, 1 foot = 304.8 mm, 1 pound per square foot = 0.0479 kPa, 1 pound per square inch = 6.895 kPa, 1 Ksi = 1,000 psi = 6.895 MPa.

a. Deflection criterion: *L*/360 for live loads, *L*/240 for total loads.

b. Design load assumptions:
Second floor dead load is 10 psf.
Roof/ceiling dead load is 12 psf.
Second floor live load is 40 psf.
Third floor live load is 30 psf.
Attic live load is 10 psf.

c. Building width is in the direction of horizontal framing members supported by the header.

TABLE R603.6(22)
BACK-TO-BACK HEADER SPANS
Headers Supporting Two Floors, Roof and Ceiling
(50 Ksi steel)[a, b]

MEMBER DESIGNATION	GROUND SNOW LOAD (20 psf)					GROUND SNOW LOAD (30 psf)				
	Building width[c] (feet)					Building width[c] (feet)				
	24	28	32	36	40	24	28	32	36	40
2-350S162-33	—	—	—	—	—	—	—	—	—	—
2-350S162-43	—	—	—	—	—	—	—	—	—	—
2-350S162-54	2′-9″	2′-3″	—	—	—	2′-8″	2′-3″	—	—	—
2-350S162-68	3′-11″	3′-6″	3′-2″	2′-10″	2′-6″	3′-11″	3′-6″	3′-1″	2′-9″	2′-6″
2-350S162-97	4′-9″	4′-6″	4′-4″	4′-1″	3′-10″	4′-8″	4′-6″	4′-4″	4′-1″	3′-9″
2-550S162-33	—	—	—	—	—	—	—	—	—	—
2-550S162-43	2′-9″	2′-0″	—	—	—	2′-8″	—	—	—	—
2-550S162-54	4′-5″	3′-10″	3′-4″	2′-11″	2′-5″	4′-4″	3′-9″	3′-3″	2′-10″	2′-5″
2-550S162-68	5′-8″	5′-2″	4′-8″	4′-3″	3′-11″	5′-8″	5′-1″	4′-8″	4′-3″	3′-10″
2-550S162-97	6′-10″	6′-6″	6′-3″	6′-0″	5′-7″	6′-9″	6′-5″	6′-3″	5′-11″	5′-6″
2-800S162-33	—	—	—	—	—	—	—	—	—	—
2-800S162-43	3′-2″	2′-7″	—	—	—	3′-1″	2′-6″	—	—	—
2-800S162-54	5′-2″	4′-7″	4′-0″	3′-6″	3′-0″	5′-2″	4′-6″	3′-11″	3′-5″	2′-11″
2-800S162-68	6′-11″	6′-3″	5′-8″	5′-2″	4′-9″	6′-10″	6′-2″	5′-7″	5′-2″	4′-8″
2-800S162-97	9′-3″	8′-8″	8′-3″	7′-9″	7′-4″	9′-2″	8′-8″	8′-2″	7′-9″	7′-4″
2-1000S162-43	2′-6″	2′-2″	2′-0″	—	—	2′-6″	2′-2″	1′-11″	—	—
2-1000S162-54	5′-0″	4′-4″	3′-11″	3′-6″	3′-2″	4′-11″	4′-4″	3′-10″	3′-6″	3′-2″
2-1000S162-68	7′-10″	7′-2″	6′-6″	5′-11″	5′-6″	7′-9″	7′-1″	6′-5″	5′-11″	5′-5″
2-1000S162-97	10′-1″	9′-5″	8′-11″	8′-6″	8′-0″	10′-0″	9′-5″	8′-10″	8′-5″	7′-11″
2-1200S162-54	—	—	—	—	—	—	—	—	—	—
2-1200S162-68	7′-4″	6′-8″	6′-1″	5′-6″	5′-1″	7′-3″	6′-7″	6′-0″	5′-6″	5′-0″
2-1200S162-97	9′-5″	8′-8″	8′-1″	7′-6″	7′-1″	9′-4″	8′-8″	8′-0″	7′-6″	7′-0″

For SI: 1 inch = 25.4 mm, 1 foot = 304.8 mm, 1 pound per square foot = 0.0479 kPa, 1 pound per square inch = 6.895 kPa, 1 Ksi = 1,000 psi = 6.895 MPa.

a. Deflection criterion: *L*/360 for live loads, *L*/240 for total loads.

b. Design load assumptions:
Second floor dead load is 10 psf.
Roof/ceiling dead load is 12 psf.
Second floor live load is 40 psf.
Third floor live load is 30 psf.
Attic live load is 10 psf.

c. Building width is in the direction of horizontal framing members supported by the header.

TABLE R603.6(23)
BACK-TO-BACK HEADER SPANS
Headers Supporting Two Floors, Roof and Ceiling
(33 Ksi steel)[a, b]

MEMBER DESIGNATION	GROUND SNOW LOAD (50 psf)					GROUND SNOW LOAD (70 psf)				
	Building width[c] (feet)					Building width[c] (feet)				
	24	28	32	36	40	24	28	32	36	40
2-350S162-33	—	—	—	—	—	—	—	—	—	—
2-350S162-43	—	—	—	—	—	—	—	—	—	—
2-350S162-54	—	—	—	—	—	—	—	—	—	—
2-350S162-68	2′-2″	—	—	—	—	—	—	—	—	—
2-350S162-97	3′-3″	3′-0″	2′-8″	2′-4″	2′-1″	3′-1″	2′-9″	2′-6″	2′-2″	—
2-550S162-33	—	—	—	—	—	—	—	—	—	—
2-550S162-43	—	—	—	—	—	—	—	—	—	—
2-550S162-54	2′-2″	—	—	—	—	—	—	—	—	—
2-550S162-68	3′-6″	3′-0″	2′-6″	2′-1″	—	3′-2″	2′-9″	2′-3″	—	—
2-550S162-97	5′-0″	4′-6″	4′-1″	3′-9″	3′-5″	4′-8″	4′-3″	3′-11″	3′-7″	3′-3″
2-800S162-33	—	—	—	—	—	—	—	—	—	—
2-800S162-43	—	—	—	—	—	—	—	—	—	—
2-800S162-54	3′-0″	2′-3″	—	—	—	2′-7″	—	—	—	—
2-800S162-68	4′-9″	4′-2″	3′-7″	3′-1″	2′-7″	4′-5″	3′-10″	3′-3″	2′-9″	2′-3″
2-800S162-97	6′-9″	6′-1″	5′-7″	5′-2″	4′-9″	6′-4″	5′-10″	5′-4″	4′-11″	4′-7″
2-1000S162-43	—	—	—	—	—	—	—	—	—	—
2-1000S162-54	3′-6″	2′-8″	—	—	—	3′-1″	2′-2″	—	—	—
2-1000S162-68	5′-6″	4′-10″	4′-2″	3′-7″	3′-1″	5′-1″	4′-6″	3′-10″	3′-4″	2′-9″
2-1000S162-97	8′-0″	7′-4″	6′-9″	6′-3″	5′-9″	7′-7″	7′-0″	6′-5″	5′-11″	5′-6″
2-1200S162-54	3′-11″	3′-0″	2′-0″	—	—	3′-5″	2′-6″	—	—	—
2-1200S162-68	6′-2″	5′-5″	4′-9″	4′-1″	3′-6″	5′-9″	5′-0″	4′-4″	3′-9″	3′-2″
2-1200S162-97	9′-1″	8′-4″	7′-8″	7′-1″	6′-7″	8′-8″	7′-11″	7′-4″	6′-9″	6′-3″

For SI: 1 inch = 25.4 mm, 1 foot = 304.8 mm, 1 pound per square foot = 0.0479 kPa, 1 pound per square inch = 6.895 kPa, 1 Ksi = 1,000 psi = 6.895 MPa.

a. Deflection criterion: *L*/360 for live loads, *L*/240 for total loads.

b. Design load assumptions:
Second floor dead load is 10 psf.
Roof/ceiling dead load is 12 psf.
Second floor live load is 40 psf.
Third floor live load is 30 psf.
Attic live load is 10 psf.

c. Building width is in the direction of horizontal framing members supported by the header.

TABLE R603.6(24)
BACK-TO-BACK HEADER SPANS
Headers Supporting Two Floors, Roof and Ceiling
(50 Ksi steel)[a, b]

MEMBER DESIGNATION	GROUND SNOW LOAD (50 psf)					GROUND SNOW LOAD (70 psf)				
	Building width[c] (feet)					Building width[c] (feet)				
	24	28	32	36	40	24	28	32	36	40
2-350S162-33	—	—	—	—	—	—	—	—	—	—
2-350S162-43	—	—	—	—	—	—	—	—	—	—
2-350S162-54	2′-6″	2′-1″	—	—	—	2′-3″	—	—	—	—
2-350S162-68	3′-9″	3′-4″	2′-11″	2′-7″	2′-4″	3′-6″	3′-1″	2′-9″	2′-5″	2′-2″
2-350S162-97	4′-6″	4′-4″	4′-2″	3′-11″	3′-8″	4′-4″	4′-2″	4′-0″	3′-9″	3′-6″
2-550S162-33	—	—	—	—	—	—	—	—	—	—
2-550S162-43	2′-5″	—	—	—	—	—	—	—	—	—
2-550S162-54	4′-1″	3′-7″	3′-1″	2′-7″	2′-2″	3′-10″	3′-3″	2′-10″	2′-4″	—
2-550S162-68	5′-5″	4′-11″	4′-5″	4′-0″	3′-8″	5′-1″	4′-7″	4′-2″	3′-10″	3′-5″
2-550S162-97	6′-5″	6′-2″	5′-11″	5′-9″	5′-4″	6′-3″	6′-0″	5′-9″	5′-6″	5′-2″
2-800S162-33	—	—	—	—	—	—	—	—	—	—
2-800S162-43	2′-11″	2′-2″	—	—	—	2′-6″	—	—	—	—
2-800S162-54	4′-11″	4′-3″	3′-8″	3′-2″	2′-8″	4′-6″	3′-11″	3′-5″	2′-11″	2′-4″
2-800S162-68	6′-7″	5′-11″	5′-4″	4′-11″	4′-6″	6′-2″	5′-7″	5′-1″	4′-8″	4′-3″
2-800S162-97	8′-9″	8′-5″	7′-11″	7′-6″	7′-0″	8′-5″	8′-1″	7′-9″	7′-3″	6′-10″
2-1000S162-43	2′-4″	2′-1″	—	—	—	2′-2″	1′-11″	—	—	—
2-1000S162-54	4′-8″	4′-1″	3′-8″	3′-3″	3′-0″	4′-4″	3′-10″	3′-5″	3′-1″	2′-9″
2-1000S162-68	7′-6″	6′-9″	6′-2″	5′-8″	5′-2″	7′-1″	6′-5″	5′-10″	5′-4″	4′-11″
2-1000S162-97	9′-9″	9′-2″	8′-7″	8′-2″	7′-8″	9′-5″	8′-10″	8′-5″	7′-11″	7′-5″
2-1200S162-54	—	—	—	—	—	—	—	—	—	—
2-1200S162-68	7′-0″	6′-4″	5′-9″	5′-3″	4′-9″	6′-7″	6′-0″	5′-5″	5′-0″	4′-6″
2-1200S162-97	9′-1″	8′-4″	7′-9″	7′-3″	6′-9″	8′-8″	8′-0″	7′-6″	7′-0″	6′-7″

For SI: 1 inch = 25.4 mm, 1 foot = 304.8 mm, 1 pound per square foot = 0.0479 kPa, 1 pound per square inch = 6.895 kPa, 1 Ksi = 1,000 psi = 6.895 MPa.

a. Deflection criterion: *L*/360 for live loads, *L*/240 for total loads.

b. Design load assumptions:
Second floor dead load is 10 psf.
Roof/ceiling dead load is 12 psf.
Second floor live load is 40 psf.
Third floor live load is 30 psf.
Attic live load is 10 psf.

c. Building width is in the direction of horizontal framing members supported by the header.

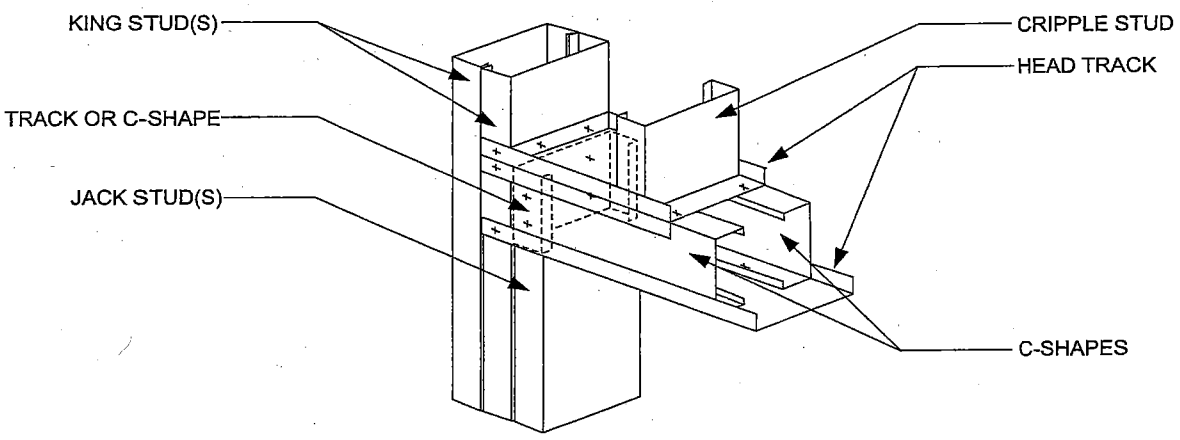

FIGURE R603.6.1(1)
BOX BEAM HEADER IN GABLE ENDWALL

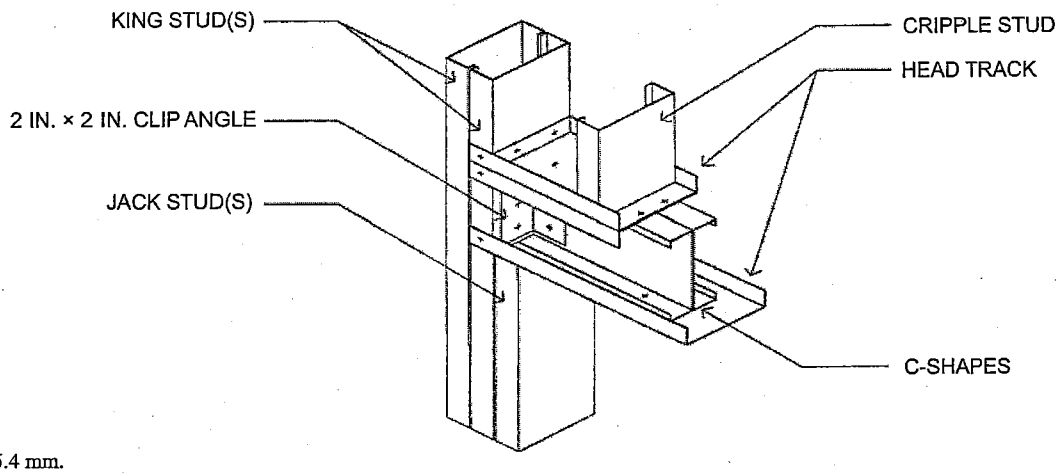

For SI: 1 inch = 25.4 mm.

FIGURE R603.6.1(2)
BACK-TO-BACK HEADER IN GABLE ENDWALL

TABLE R603.7(1)
TOTAL NUMBER OF JACK AND KING STUDS REQUIRED AT EACH END OF AN OPENING

SIZE OF OPENING (feet-inches)	24-INCH O.C. STUD SPACING		16-INCH O.C. STUD SPACING	
	No. of jack studs	No. of king studs	No. of jack studs	No. of king studs
Up to 3′-6″	1	1	1	1
> 3′-6″ to 5′-0″	1	2	1	2
> 5′-0″ to 5′-6″	1	2	2	2
> 5′-6″ to 8′-0″	1	2	2	2
> 8′-0″ to 10′-6″	2	2	2	3
> 10′-6″ to 12′-0″	2	2	3	3
> 12′-0″ to 13′-0″	2	3	3	3
> 13′-0″ to 14′-0″	2	3	3	4
> 14′-0″ to 16′-0″	2	3	3	4
> 16′-0″ to 18′-0″	3	3	4	4

For SI: 1 inch = 25.4 mm, 1 foot = 304.8 mm.

TABLE R603.7(2)
HEADER TO KING STUD CONNECTION REQUIREMENTS[a, b, c, d]

HEADER SPAN (feet)	BASIC WIND SPEED (mph), EXPOSURE		
	85 B or Seismic Design Categories A, B, C, D_0, D_1 and D_2	85 C or less than 110 B	Less than 110 C
≤ 4′	4-No. 8 screws	4-No. 8 screws	6-No. 8 screws
> 4′ to 8′	4-No. 8 screws	4-No. 8 screws	8-No. 8 screws
> 8′ to 12′	4-No. 8 screws	6-No. 8 screws	10-No. 8 screws
> 12′ to 16′	4-No. 8 screws	8-No. 8 screws	12-No. 8 screws

For SI: 1 inch = 25.4 mm, 1 foot = 304.8 mm, 1 mile per hour = 0.447 m/s, 1 pound = 4.448 N.

a. All screw sizes shown are minimum.

b. For headers located on the first floor of a two-story building or the first or second floor of a three-story building, the total number of screws is permitted to be reduced by 2 screws, but the total number of screws shall be no less than 4.

c. For roof slopes of 6:12 or greater, the required number of screws may be reduced by half, but the total number of screws shall be no less than four.

d. Screws can be replaced by an uplift connector which has a capacity of the number of screws multiplied by 164 pounds (e.g., 12-No. 8 screws can be replaced by an uplift connector whose capacity exceeds 12 × 164 pounds = 1,968 pounds).

TABLE R603.8
HEAD AND SILL TRACK SPAN F_y = 33 KSI

BASIC WIND SPEED (mph)		ALLOWABLE HEAD AND SILL TRACK SPAN[a, b, c] (feet-inches)					
EXPOSURE		TRACK DESIGNATION					
B	C	350T125-33	350T125-43	350T125-54	550T125-33	550T125-43	550T125-54
85	—	5′-0″	5′-7″	6′-2″	5′-10″	6′-8″	7′-0″
90	—	4′-10″	5′-5″	6′-0″	5′-8″	6′-3″	6′-10″
100	85	4′-6″	5′-1″	5′-8″	5′-4″	5′-11″	6′-5″
110	90	4′-2″	4′-9″	5′-4″	5′-1″	5′-7″	6′-1″
120	100	3′-11″	4′-6″	5′-0″	4′-10″	5′-4″	5′-10″
130	110	3′-8″	4′-2″	4′-9″	4′-1″	5′-1″	5′-7″
140	120	3′-7″	4′-1″	4′-7″	3′-6″	4′-11″	5′-5″
150	130	3′-5″	3′-10″	4′-4″	2′-11″	4′-7″	5′-2″
—	140	3′-1″	3′-6″	4′-1″	2′-3″	4′-0″	4′-10″
—	150	2′-9″	3′-4″	3′-10″	2′-0″	3′-7″	4′-7″

For SI: 1 inch = 25.4 mm, 1 foot = 304.8 mm, 1 mile per hour = 0.447 m/s.

a. Deflection limit: *L*/240.

b. Head and sill track spans are based on components and cladding wind speeds and 48-inch tributary span.

c. For openings less than 4 feet in height that have both a head track and sill track, the above spans are permitted to be multiplied by 1.75. For openings less than or equal to 6 feet in height that have both a head track and a sill track, the above spans are permitted to be multiplied by a factor of 1.5.

R603.9 Structural sheathing. Structural sheathing shall be installed in accordance with Figure R603.9 and this section on all sheathable exterior wall surfaces, including areas above and below openings.

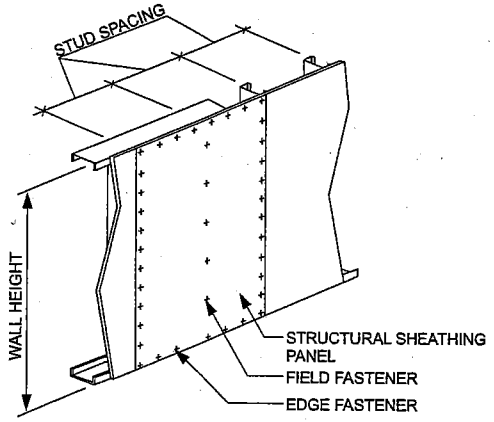

FIGURE R603.9
STRUCTURAL SHEATHING FASTENING PATTERN

R603.9.1 Sheathing materials. Structural sheathing panels shall consist of minimum $^{7}/_{16}$-inch-thick (11 mm) oriented strand board or $^{15}/_{32}$-inch-thick (12 mm) plywood.

R603.9.2 Determination of minimum length of full height sheathing. The minimum length of full height sheathing on each braced wall line shall be determined by multiplying the length of the braced wall line by the percentage obtained from Table R603.9.2(1) and by the plan aspect-ratio adjustment factors obtained from Table R603.9.2(2). The minimum length of full height sheathing shall not be less than 20 percent of the braced wall line length.

To be considered full height sheathing, structural sheathing shall extend from the bottom to the top of the wall without interruption by openings. Only sheathed, full height wall sections, uninterrupted by openings, which are a minimum of 48 inches (1219 mm) wide, shall be counted toward meeting the minimum percentages in Table R603.9.2(1). In addition, structural sheathing shall comply with all of the following requirements:

1. Be installed with the long dimension parallel to the stud framing (i.e., vertical orientation) and shall cover the full vertical height of wall from the bottom of the bottom track to the top of the top track of each story. Installing the long dimension perpendicular to the stud framing or using shorter segments shall be permitted provided that the horizontal joint is blocked as described in Item 2.
2. Be blocked when the long dimension is installed perpendicular to the stud framing (i.e., horizontal orientation). Blocking shall be a minimum of 33 mil (0.84 mm) thickness. Each horizontal structural sheathing panel shall be fastened with No. 8 screws spaced at 6 inches (152 mm) on center to the blocking at the joint.
3. Be applied to each end (corners) of each of the exterior walls with a minimum 48-inch-wide (1219 mm) panel.

R603.9.2.1 Full height sheathing. The minimum percentage of full-height structural sheathing shall be multiplied by 1.10 for 9-foot-high (2743 mm) walls and multiplied by 1.20 for 10-foot-high (3048 mm) walls.

R603.9.2.2 Full height sheathing in hip roof homes. For hip roofed homes, the minimum percentages of full height sheathing in Table R603.9.2(1), based upon wind, shall be permitted to be multiplied by a factor of 0.95 for roof slopes not exceeding 7:12 and a factor of 0.9 for roof slopes greater than 7:12.

R603.9.2.3 Full height sheathing in lowest story. In the lowest story of a dwelling, multiplying the percentage of full height sheathing required in Table R603.9.2(1) by 0.6, shall be permitted provided hold down anchors are provided in accordance with Section R603.9.4.2.

R603.9.3 Structural sheathing fastening. All edges and interior areas of structural sheathing panels shall be fastened to framing members and tracks in accordance with Figure R603.9 and Table R603.3.2(1). Screws for attachment of structural sheathing panels shall be bugle-head, flat-head, or similar head style with a minimum head diameter of 0.29 inch (8 mm).

For continuously-sheathed braced wall lines using wood structural panels installed with No. 8 screws spaced 4-inches (102 mm) on center at all panel edges and 12 inches (304.8 mm) on center on intermediate framing members, the following shall apply:

1. Multiplying the percentages of full height sheathing in Table R603.9.2(1) by 0.72 shall be permitted.
2. For bottom track attached to foundations or framing below, the bottom track anchor or screw connection spacing in Table R505.3.1(1) and Table R603.3.1 shall be multiplied by two-thirds.

R603.9.4 Uplift connection requirements. Uplift connections shall be provided in accordance with this section.

R603.9.4.1 Wind speeds greater than 100 mph. Where wind speeds are in excess of 100 miles per hour (45 m/s), Exposure C, walls shall be provided wind direct uplift connections in accordance with AISI S230, Section E13.3, and AISI S230, Section F7.2, as required for 110 miles per hour (49 m/s), Exposure C.

R603.9.4.2 Hold-down anchor. Where the percentage of full height sheathing is adjusted in accordance with Section R603.9.2.3, a hold-down anchor, with a strength of 4,300 pounds (19 kN), shall be provided at each end of each full-height sheathed wall section used to meet the minimum percent sheathing requirements of Section R603.9.2. Hold-down anchors shall be attached to back-to-back studs; structural sheathing panels shall have edge-fastening to the studs, in accordance with Section R603.9.3 and AISI S230, Table E11-1.

A single hold-down anchor, installed in accordance with Figure R603.9.2, shall be permitted at the corners of buildings.

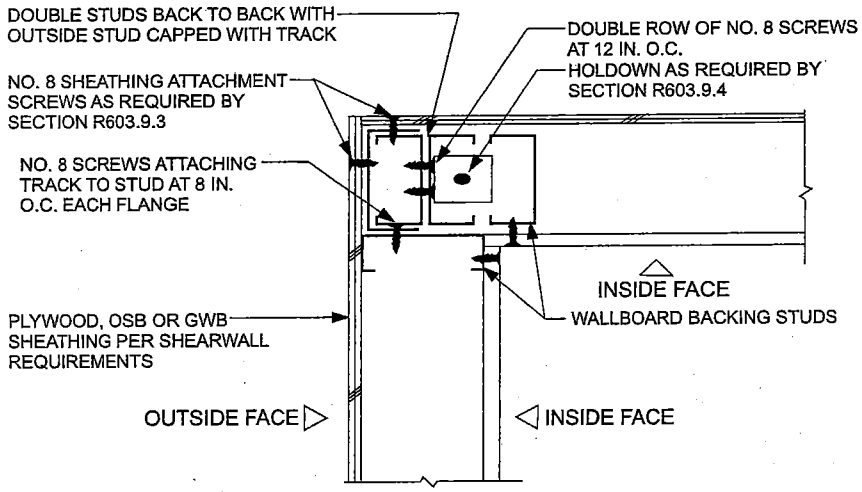

For SI: 1 inch = 25.4 mm.

FIGURE R603.9.2
CORNER STUD HOLD-DOWN DETAIL

TABLE R603.9.2(1)
MINIMUM PERCENTAGE OF FULL HEIGHT STRUCTURAL SHEATHING ON EXTERIOR WALLS[a, b]

WALL SUPPORTING	ROOF SLOPE	BASIC WIND SPEED AND EXPOSURE (mph)					
		85 B	90 B	100 B / 85 C	< 110 B / 90 C	100 C	< 110 C
Roof and ceiling only (one story or top floor of two- or three-story building).	3:12	8	9	9	12	16	20
	6:12	12	13	15	20	26	35
	9:12	21	23	25	30	50	58
	12:12	30	33	35	40	66	75
One story, roof and ceiling (first floor of a two-story building or second floor of a three-story building).	3:12	24	27	30	35	50	66
	6:12	25	28	30	40	58	74
	9:12	35	38	40	55	74	91
	12:12	40	45	50	65	100	115
Two story, roof and ceiling (first floor of a three-story building).	3:12	40	45	51	58	84	112
	6:12	38	43	45	60	90	113
	9:12	49	53	55	80	98	124
	12:12	50	57	65	90	134	155

For SI: 1 mile per hour = 0.447 m/s.

a. Linear interpolation is permitted.

b. For hip-roofed homes the minimum percentage of full height sheathing, based upon wind, is permitted to be multiplied by a factor of 0.95 for roof slopes not exceeding 7:12 and a factor of 0.9 for roof slopes greater than 7:12.

TABLE R603.9.2(2)
FULL HEIGHT SHEATHING LENGTH ADJUSTMENT FACTORS

PLAN ASPECT RATIO	LENGTH ADJUSTMENT FACTORS	
	Short wall	Long wall
1:1	1.0	1.0
1.5:1	1.5	0.67
2:1	2.0	0.50
3:1	3.0	0.33
4:1	4.0	0.25

R603.9.5 Structural sheathing for stone and masonry veneer. In Seismic Design Category C, where stone and masonry veneer is installed in accordance with Section R703.7, the length of structural sheathing for walls supporting one story, roof and ceiling shall be the greater of the amount required by Section R603.9.2 or 36 percent, modified by Section R603.9.2 except Section R603.9.2.2 shall not be permitted.

SECTION R604
WOOD STRUCTURAL PANELS

R604.1 Identification and grade. Wood structural panels shall conform to DOC PS 1, DOC PS 2 or ANSI/APA PRP 210 or, when manufactured in Canada, CSA O437 or CSA O325. All panels shall be identified by a grade mark or certificate of inspection issued by an approved agency.

R604.2 Allowable spans. The maximum allowable spans for wood structural panel wall sheathing shall not exceed the values set forth in Table R602.3(3).

R604.3 Installation. Wood structural panel wall sheathing shall be attached to framing in accordance with Table R602.3(1) or R602.3(3). Wood structural panels marked Exposure 1 or Exterior are considered water-repellent sheathing under the code.

SECTION R605
PARTICLEBOARD

R605.1 Identification and grade. Particleboard shall conform to ANSI A208.1 and shall be so identified by a grade mark or certificate of inspection issued by an approved agency. Particleboard shall comply with the grades specified in Table R602.3(4).

SECTION R606
GENERAL MASONRY CONSTRUCTION

R606.1 General. Masonry construction shall be designed and constructed in accordance with the provisions of this section, TMS 403 or in accordance with the provisions of TMS 402/ ACI 530/ASCE 5.

R606.1.1 Professional registration. *Empirical* design provisions of Chapter 5 of TMS 402/ACI 530/ASCE 5, the provisions of TMS 403, or the provisions of this section are used to design masonry, project drawings, typical details and specifications *shall not exempt construction documents from the requirement to be stamped by a California licensed architect or engineer. Notwithstanding other sections of law, the law establishing these provisions is found in Business and Professions Code Sections 5537.1 and 6737.1.*

R606.2 Thickness of masonry. The nominal thickness of masonry walls shall conform to the requirements of Sections R606.2.1 through R606.2.4.

R606.2.1 Minimum thickness. The minimum thickness of masonry bearing walls more than one story high shall be 8 inches (203 mm). Solid masonry walls of one-story dwellings and garages shall not be less than 6 inches (152 mm) in thickness when not greater than 9 feet (2743 mm) in height, provided that when gable construction is used, an additional 6 feet (1829 mm) is permitted to the peak of the gable. Masonry walls shall be laterally supported in either the horizontal or vertical direction at intervals as required by Section R606.9.

R606.2.2 Rubble stone masonry wall. The minimum thickness of rough, random or coursed rubble stone masonry walls shall be 16 inches (406 mm).

R606.2.3 Change in thickness. Where walls of masonry of hollow units or masonry-bonded hollow walls are decreased in thickness, a course of solid masonry shall be constructed between the wall below and the thinner wall above, or special units or construction shall be used to transmit the loads from face shells or wythes above to those below.

R606.2.4 Parapet walls. Unreinforced solid masonry parapet walls shall not be less than 8 inches (203 mm) thick and their height shall not exceed four times their thickness. Unreinforced hollow unit masonry parapet walls shall be not less than 8 inches (203 mm) thick, and their height shall not exceed three times their thickness. Masonry parapet walls in areas subject to wind loads of 30 pounds per square foot (1.44 kPa) located in Seismic Design Category D_0, D_1 or D_2, or on townhouses in Seismic Design Category C shall be reinforced in accordance with Section R606.12.

R606.3 Corbeled masonry. Corbeled masonry shall be in accordance with Sections R606.3.1 through R606.3.3.

R606.3.1 Units. Solid masonry units or masonry units filled with mortar or grout shall be used for corbeling.

R606.3.2 Corbel projection. The maximum projection of one unit shall not exceed one-half the height of the unit or one-third the thickness at right angles to the wall. The maximum corbeled projection beyond the face of the wall shall not exceed:

1. One-half of the wall thickness for multiwythe walls bonded by mortar or grout and wall ties or masonry headers, or
2. One-half the wythe thickness for single wythe walls, masonry-bonded hollow walls, multiwythe walls with open collar joints and veneer walls.

R606.3.3 Corbeled masonry supporting floor or roof-framing members. When corbeled masonry is used to support floor or roof-framing members, the top course of the corbel shall be a header course or the top course bed joint shall have ties to the vertical wall.

R606.4 Support conditions. Bearing and support conditions shall be in accordance with Sections R606.4.1 and R606.4.2.

R606.4.1 Bearing on support. Each masonry wythe shall be supported by at least two-thirds of the wythe thickness.

R606.4.2 Support at foundation. Cavity wall or masonry veneer construction may be supported on an 8-inch (203 mm) foundation wall, provided the 8-inch (203 mm) wall is corbeled to the width of the wall system above with masonry constructed of solid masonry units or masonry units filled with mortar or grout. The total horizontal projection of the corbel shall not exceed 2 inches (51 mm) with individual corbels projecting not more than one-third the thickness of the unit or one-half the height of the unit. The hollow space behind the corbeled masonry shall be filled with mortar or grout.

R606.5 Allowable stresses. Allowable compressive stresses in masonry shall not exceed the values prescribed in Table R606.5. In determining the stresses in masonry, the effects of all loads and conditions of loading and the influence of all forces affecting the design and strength of the several parts shall be taken into account.

R606.5.1 Combined units. In walls or other structural members composed of different kinds or grades of units, materials or mortars, the maximum stress shall not exceed the allowable stress for the weakest of the combination of units, materials and mortars of which the member is composed. The net thickness of any facing unit that is used to resist stress shall not be less than 1.5 inches (38 mm).

R606.6 Piers. The unsupported height of masonry piers shall not exceed ten times their least dimension. When structural clay tile or hollow concrete masonry units are used for isolated piers to support beams and girders, the cellular spaces shall be filled solidly with concrete or Type M or S mortar, except that unfilled hollow piers may be used if their unsupported height is not more than four times their least dimension. Where hollow masonry units are solidly filled with concrete or Type M, S or N mortar, the allowable compressive stress shall be permitted to be increased as provided in Table R606.5.

R606.6.1 Pier cap. Hollow piers shall be capped with 4 inches (102 mm) of solid masonry or concrete, a masonry cap block, or shall have cavities of the top course filled with concrete or grout.

R606.7 Chases. Chases and recesses in masonry walls shall not be deeper than one-third the wall thickness, and the maximum length of a horizontal chase or horizontal projection shall not exceed 4 feet (1219 mm), and shall have at least 8 inches (203 mm) of masonry in back of the chases and recesses and between adjacent chases or recesses and the jambs of openings. Chases and recesses in masonry walls shall be designed and constructed so as not to reduce the required strength or required fire resistance of the wall and in no case shall a chase or recess be permitted within the

required area of a pier. Masonry directly above chases or recesses wider than 12 inches (305 mm) shall be supported on noncombustible lintels.

R606.8 Stack bond. In unreinforced masonry where masonry units are laid in stack bond, longitudinal reinforcement consisting of not less than two continuous wires each with a minimum aggregate cross-sectional area of 0.017 square inch (11 mm^2) shall be provided in horizontal bed joints spaced not more than 16 inches (406 mm) on center vertically.

R606.9 Lateral support. Masonry walls shall be laterally supported in either the horizontal or the vertical direction. The maximum spacing between lateral supports shall not exceed the distances in Table R606.9. Lateral support shall be provided by cross walls, pilasters, buttresses or structural frame members when the limiting distance is taken horizontally, or by floors or roofs when the limiting distance is taken vertically.

TABLE R606.9
SPACING OF LATERAL SUPPORT FOR MASONRY WALLS

CONSTRUCTION	MAXIMUM WALL LENGTH TO THICKNESS OR WALL HEIGHT TO THICKNESS[a, b]
Bearing walls:	
Solid or solid grouted	20
All other	18
Nonbearing walls:	
Exterior	18
Interior	36

For SI: 1 foot = 304.8 mm.

a. Except for cavity walls and cantilevered walls, the thickness of a wall shall be its nominal thickness measured perpendicular to the face of the wall. For cavity walls, the thickness shall be determined as the sum of the nominal thicknesses of the individual wythes. For cantilever walls, except for parapets, the ratio of height to nominal thickness shall not exceed 6 for solid masonry, or 4 for hollow masonry. For parapets, see Section R606.2.4.

b. An additional unsupported height of 6 feet is permitted for gable end walls.

R606.9.1 Horizontal lateral support. Lateral support in the horizontal direction provided by intersecting masonry walls shall be provided by one of the methods in Section R606.9.1.1 or Section R606.9.1.2.

R606.9.1.1 Bonding pattern. Fifty percent of the units at the intersection shall be laid in an overlapping masonry bonding pattern, with alternate units having a bearing of not less than 3 inches (76 mm) on the unit below.

R606.9.1.2 Metal reinforcement. Interior nonloadbearing walls shall be anchored at their intersections, at vertical intervals of not more than 16 inches (406 mm) with joint reinforcement of at least 9 gage [0.148 inch (4mm)], or $^1/_4$-inch (6 mm) galvanized mesh hardware cloth. Intersecting masonry walls, other than interior nonloadbearing walls, shall be anchored at vertical intervals of not more than 8 inches (203 mm) with joint reinforcement of at least 9 gage and shall extend at least 30 inches (762 mm) in each direction at the intersection. Other metal ties, joint reinforcement or anchors, if used, shall be spaced to provide equivalent area of anchorage to that required by this section.

TABLE R606.5
ALLOWABLE COMPRESSIVE STRESSES FOR EMPIRICAL DESIGN OF MASONRY

CONSTRUCTION; COMPRESSIVE STRENGTH OF UNIT, GROSS AREA	ALLOWABLE COMPRESSIVE STRESSES[a] GROSS CROSS-SECTIONAL AREA[b]	
	Type M or S mortar	Type N mortar
Solid masonry of brick and other solid units of clay or shale; sand-lime or concrete brick:		
8,000 + psi	350	300
4,500 psi	225	200
2,500 psi	160	140
1,500 psi	115	100
Grouted[c] masonry, of clay or shale; sand-lime or concrete:		
4,500 + psi	225	200
2,500 psi	160	140
1,500 psi	115	100
Solid masonry of solid concrete masonry units:		
3,000 + psi	225	200
2,000 psi	160	140
1,200 psi	115	100
Masonry of hollow load-bearing units:		
2,000 + psi	140	120
1,500 psi	115	100
1,000 psi	75	70
700 psi	60	55
Hollow walls (cavity or masonry bonded[d]) solid units:		
2,500 + psi	160	140
1,500 psi	115	100
Hollow units	75	70
Stone ashlar masonry:		
Granite	720	640
Limestone or marble	450	400
Sandstone or cast stone	360	320
Rubble stone masonry:		
Coarse, rough or random	120	100

For SI: 1 pound per square inch = 6.895 kPa.

a. Linear interpolation shall be used for determining allowable stresses for masonry units having compressive strengths that are intermediate between those given in the table.

b. Gross cross-sectional area shall be calculated on the actual rather than nominal dimensions.

c. See Section R608.

d. Where floor and roof loads are carried upon one wythe, the gross cross-sectional area is that of the wythe under load; if both wythes are loaded, the gross cross-sectional area is that of the wall minus the area of the cavity between the wythes. Walls bonded with metal ties shall be considered as cavity walls unless the collar joints are filled with mortar or grout.

R606.9.2 Vertical lateral support. Vertical lateral support of masonry walls in Seismic Design Category A, B or C shall be provided in accordance with one of the methods in Section R606.9.2.1 or Section R606.9.2.2.

R606.9.2.1 Roof structures. Masonry walls shall be anchored to roof structures with metal strap anchors spaced in accordance with the manufacturer's instructions, $^1/_2$-inch (13 mm) bolts spaced not more than 6 feet (1829 mm) on center, or other approved anchors. Anchors shall be embedded at least 16 inches (406 mm) into the masonry, or be hooked or welded to bond beam reinforcement placed not less than 6 inches (152 mm) from the top of the wall.

R606.9.2.2 Floor diaphragms. Masonry walls shall be anchored to floor diaphragm framing by metal strap anchors spaced in accordance with the manufacturer's instructions, $^1/_2$-inch-diameter (13 mm) bolts spaced at intervals not to exceed 6 feet (1829 mm) and installed as shown in Figure R606.11(1), or by other approved methods.

R606.10 Lintels. Masonry over openings shall be supported by steel lintels, reinforced concrete or masonry lintels or masonry arches, designed to support load imposed.

R606.11 Anchorage. Masonry walls shall be anchored to floor and roof systems in accordance with the details shown in Figure R606.11(1), R606.11(2) or R606.11(3). Footings may be considered as points of lateral support.

R606.12 Seismic requirements. The seismic requirements of this section shall apply to the design of masonry and the construction of masonry building elements located in Seismic Design Category D_0, D_1 or D_2. Townhouses in Seismic Design Category C shall comply with the requirements of Section R606.12.2. These requirements shall not apply to glass unit masonry conforming to Section R610 or masonry veneer conforming to Section R703.7.

R606.12.1 General. Masonry structures and masonry elements shall comply with the requirements of Sections R606.12.2 through R606.12.4 based on the seismic design category established in Table R301.2(1). Masonry structures and masonry elements shall comply with the requirements of Section R606.12 and Figures R606.11(1), R606.11(2) and R606.11(3) or shall be designed in accordance with TMS 402/ACI 530/ASCE 5 or TMS 403.

R606.12.1.1 Floor and roof diaphragm construction. Floor and roof diaphragms shall be constructed of wood structural panels attached to wood framing in accordance with Table R602.3(1) or to cold-formed steel floor framing in accordance with Table R505.3.1(2) or to cold-formed steel roof framing in accordance with Table R804.3. Additionally, sheathing panel edges perpendicular to framing members shall be backed by blocking, and sheathing shall be connected to the blocking with fasteners at the edge spacing. For Seismic Design Categories C, D_0, D_1 and D_2, where the width-to-thickness dimension of the diaphragm exceeds 2-to-1, edge spacing of fasteners shall be 4 inches (102 mm) on center.

R606.12.2 Seismic Design Category C. Townhouses located in Seismic Design Category C shall comply with the requirements of this section.

R606.12.2.1 Minimum length of wall without openings. Table R606.12.2.1 shall be used to determine the minimum required solid wall length without openings at each masonry exterior wall. The provided percentage of solid wall length shall include only those wall segments that are 3 feet (914 mm) or longer. The maximum clear distance between wall segments included in determining the solid wall length shall not exceed 18 feet (5486 mm). Shear wall segments required to meet the minimum wall length shall be in accordance with Section R606.12.2.2.3.

R606.12.2.2 Design of elements not part of the lateral force-resisting system.

R606.12.2.2.1 Load-bearing frames or columns. Elements not part of the lateral force-resisting system shall be analyzed to determine their effect on the response of the system. The frames or columns shall be adequate for vertical load carrying capacity and induced moment caused by the design story drift.

R606.12.2.2.2 Masonry partition walls. Masonry partition walls, masonry screen walls and other masonry elements that are not designed to resist vertical or lateral loads, other than those induced by their own weight, shall be isolated from the structure so that vertical and lateral forces are not imparted to these elements. Isolation joints and connectors between these elements and the structure shall be designed to accommodate the design story drift.

R606.12.2.2.3 Reinforcement requirements for masonry elements. Masonry elements listed in Section R606.12.2.2.2 shall be reinforced in either the horizontal or vertical direction as shown in Figure R606.11(2) and in accordance with the following:

1. Horizontal reinforcement. Horizontal joint reinforcement shall consist of at least two longitudinal W1.7 wires spaced not more than 16 inches (406 mm) for walls greater than 4 inches (102 mm) in width and at least one longitudinal W1.7 wire spaced not more than 16 inches (406 mm) for walls not exceeding 4 inches (102 mm) in width; or at least one No. 4 bar spaced not more than 48 inches (1219 mm). Where two longitudinal wires of joint reinforcement are used, the space between these wires shall be the widest that the mortar joint will accommodate. Horizontal reinforcement shall be provided within 16 inches (406 mm) of the top and bottom of these masonry elements.
2. Vertical reinforcement. Vertical reinforcement shall consist of at least one No. 4 bar spaced not more than 48 inches (1219 mm). Vertical reinforcement shall be located within 16 inches (406 mm) of the ends of masonry walls.

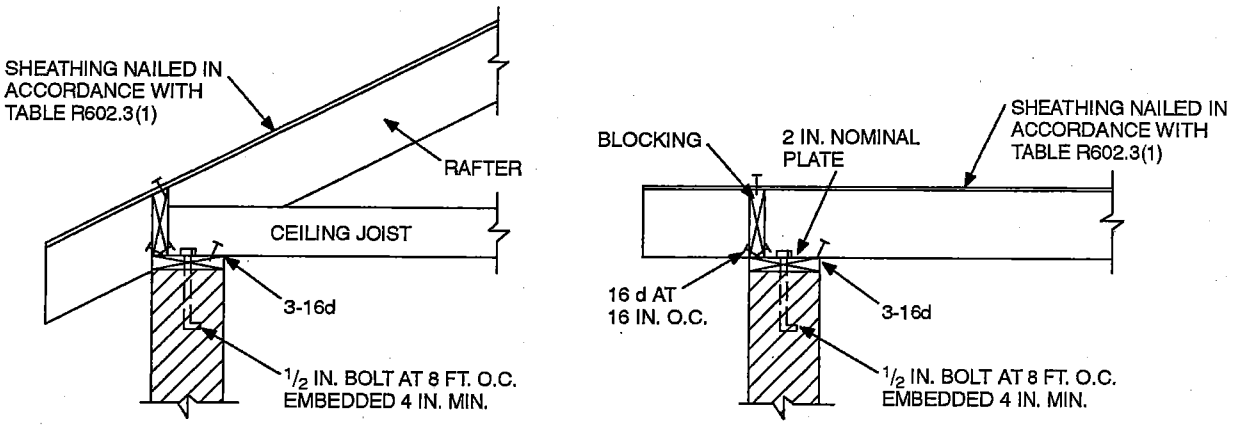

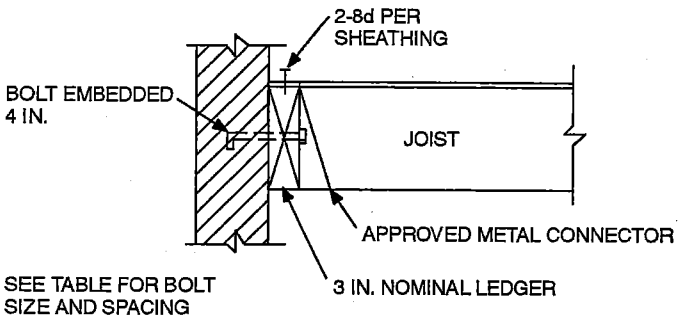

LEDGER BOLT SIZE AND SPACING

JOIST SPAN	BOLT SIZE AND SPACING	
	ROOF	FLOOR
10 FT.	1/2 AT 2 FT. 6 IN. 7/8 AT 3 FT. 6 IN.	1/2 AT 2 FT. 0 IN. 7/8 AT 2 FT. 9 IN.
10–15 FT.	1/2 AT 1 FT. 9 IN. 7/8 AT 2 FT. 6 IN.	1/2 AT 1 FT. 4 IN. 7/8 AT 2 FT. 0 IN.
15-20 FT.	1/2 AT 1 FT. 3 IN. 7/8 AT 2 FT. 0 IN.	1/2 AT 1 FT. 0 IN. 7/8 AT 1 FT. 6 IN.

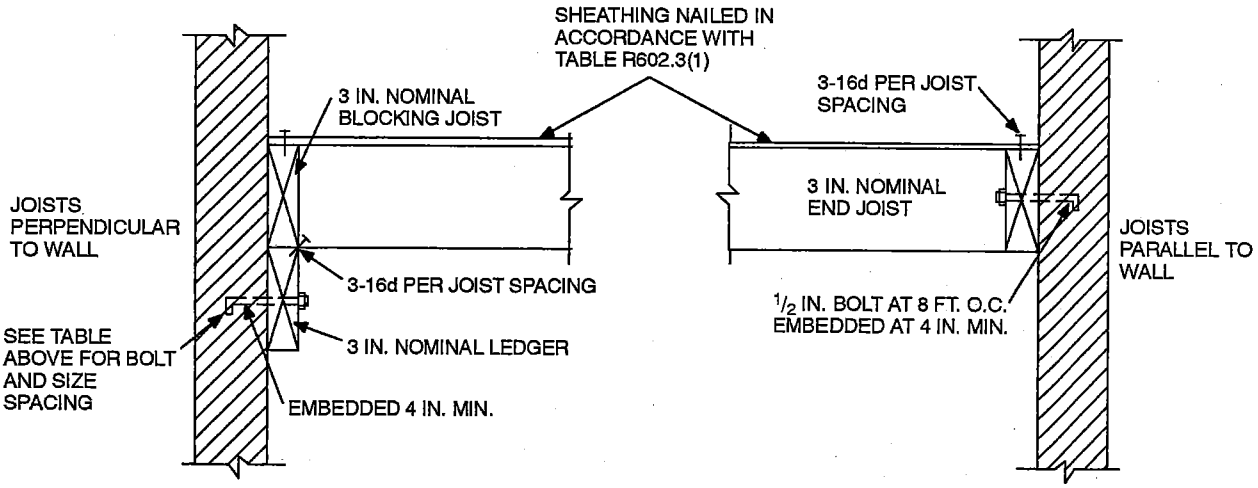

For SI: 1 inch = 25.4 mm, 1 foot = 304.8 mm, 1 pound per square foot = 0.0.479 kPa.

Note: Where bolts are located in hollow masonry, the cells in the courses receiving the bolt shall be grouted solid.

FIGURE R606.11(1)
ANCHORAGE REQUIREMENTS FOR MASONRY WALLS LOCATED IN SEISMIC DESIGN CATEGORY A, B OR C AND WHERE WIND LOADS ARE LESS THAN 30 PSF

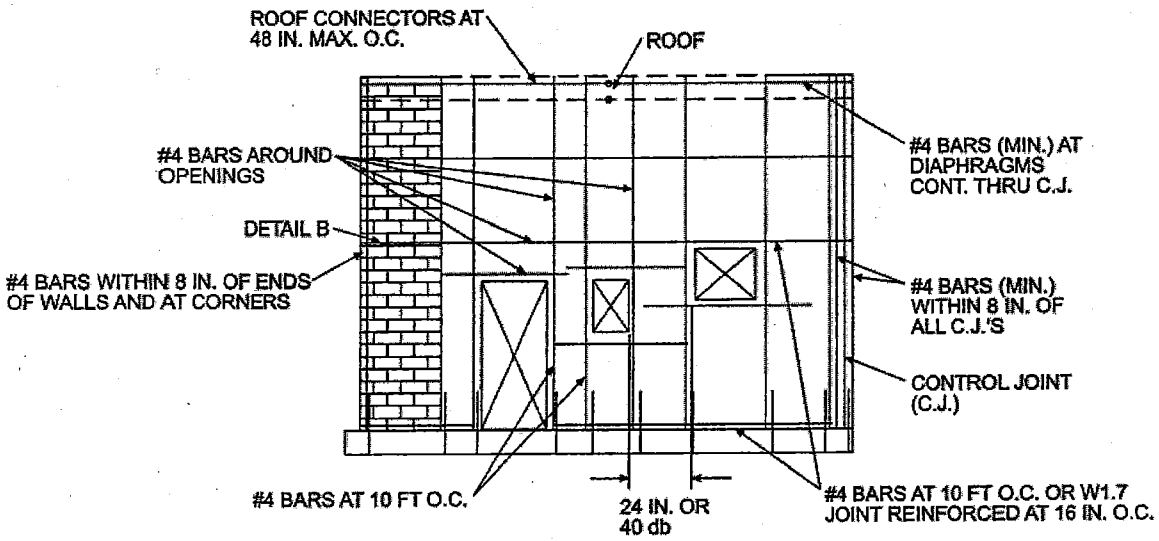

MINIMUM REINFORCEMENT FOR MASONRY WALLS

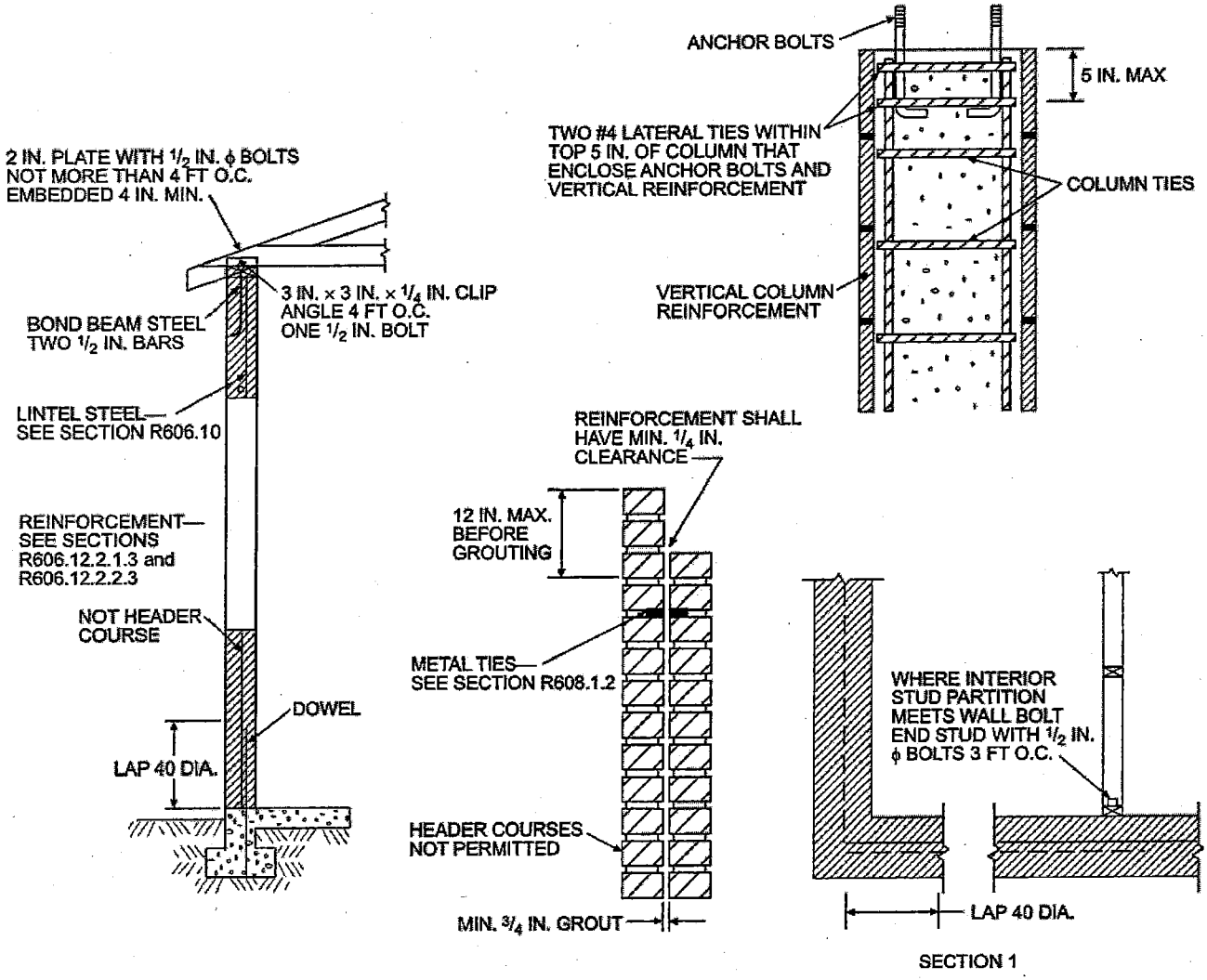

SECTION 1

For SI: 1 inch = 25.4 mm, 1 foot = 304.8 mm.

FIGURE R606.11(2)
REQUIREMENTS FOR REINFORCED GROUTED MASONRY CONSTRUCTION IN SEISMIC DESIGN CATEGORY C

3994

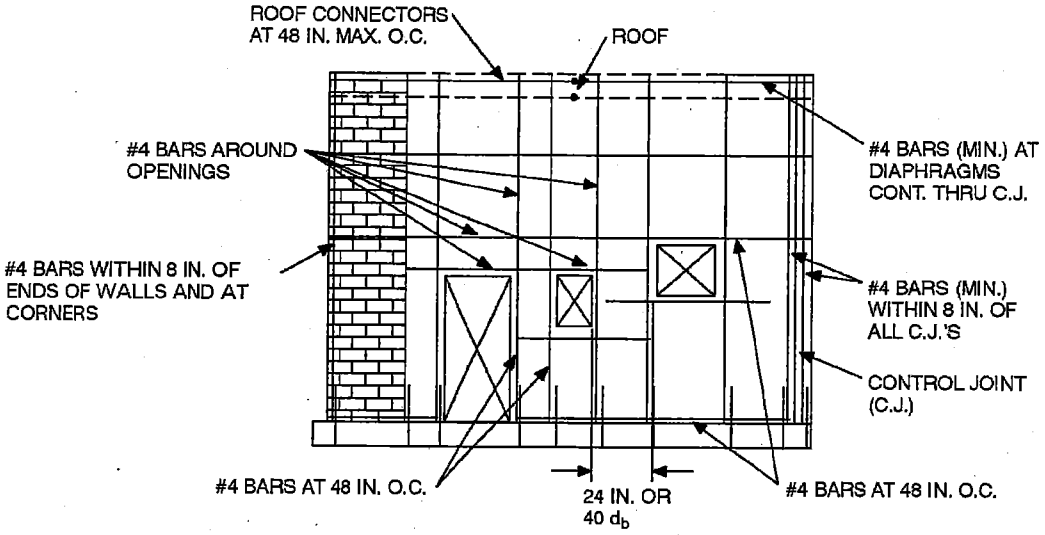

MINIMUM REINFORCEMENT FOR MASONRY WALLS

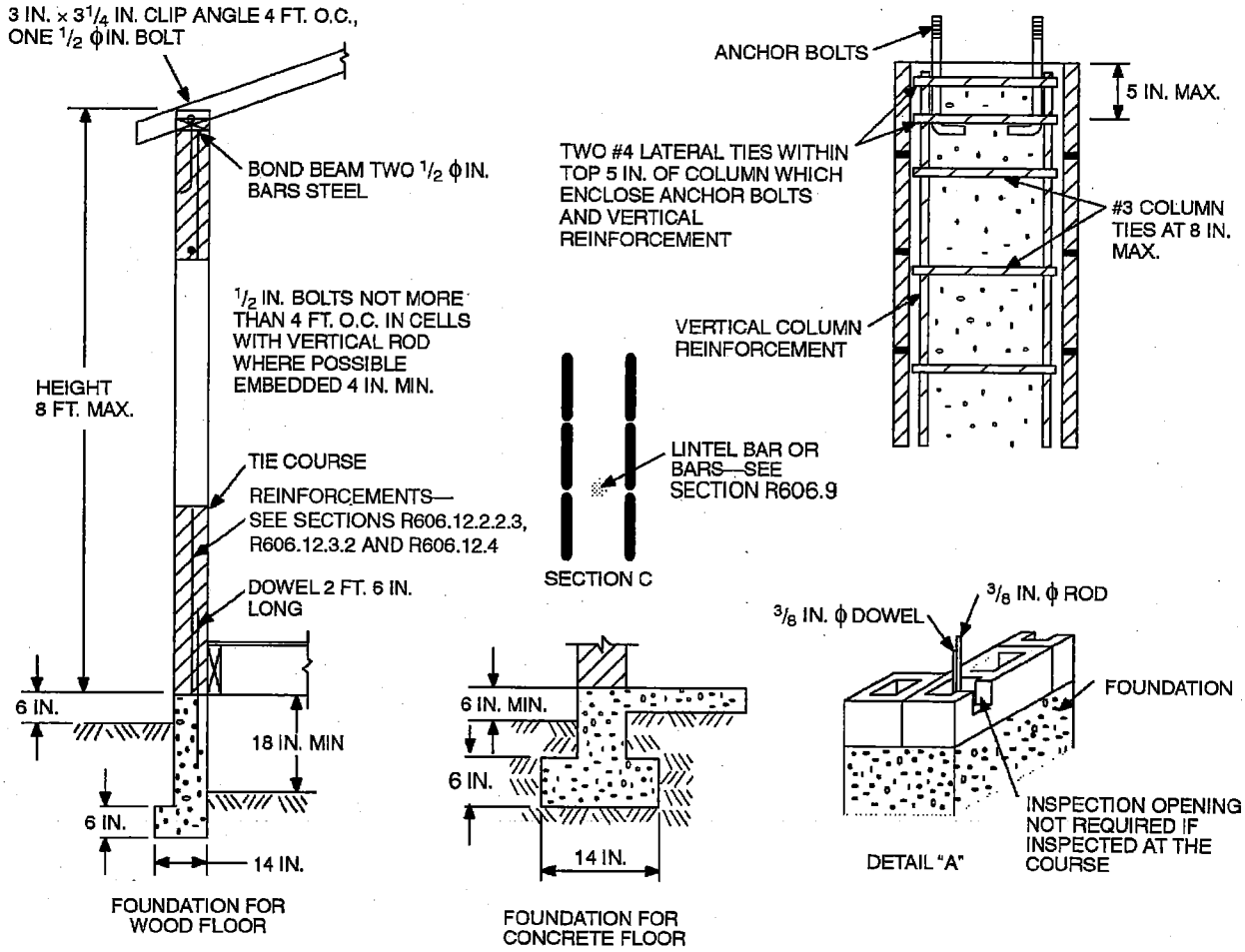

For SI: 1 inch = 25.4 mm, 1 foot = 304.8 mm.

Note: A full bed joint must be provided. All cells containing vertical bars are to be filled to the top of wall and provide inspection opening as shown on detail "A."

Horizontal bars are to be laid as shown on detail "B." Lintel bars are to be laid as shown on Section C.

FIGURE R606.11(3)
REQUIREMENTS FOR REINFORCED MASONRY CONSTRUCTION IN SEISMIC DESIGN CATEGORY D_0, D_1, OR D_2

3995

R606.12.2.3 Design of elements part of the lateral force-resisting system.

R606.12.2.3.1 Connections to masonry shear walls. Connectors shall be provided to transfer forces between masonry walls and horizontal elements in accordance with the requirements of Section 1.7.4 of TMS 402/ACI 530/ASCE 5. Connectors shall be designed to transfer horizontal design forces acting either perpendicular or parallel to the wall, but not less than 200 pounds per linear foot (2919 N/m) of wall. The maximum spacing between connectors shall be 4 feet (1219 mm). Such anchorage mechanisms shall not induce tension stresses perpendicular to grain in ledgers or nailers.

R606.12.2.3.2 Connections to masonry columns. Connectors shall be provided to transfer forces between masonry columns and horizontal elements in accordance with the requirements of Section 1.7.4 of TMS 402/ACI 530/ASCE 5. Where anchor bolts are used to connect horizontal elements to the tops of columns, the bolts shall be placed within lateral ties. Lateral ties shall enclose both the vertical bars in the column and the anchor bolts. There shall be a minimum of two No. 4 lateral ties provided in the top 5 inches (127 mm) of the column.

R606.12.2.3.3 Minimum reinforcement requirements for masonry shear walls. Vertical reinforcement of at least one No. 4 bar shall be provided at corners, within 16 inches (406 mm) of each side of openings, within 8 inches (203 mm) of each side of movement joints, within 8 inches (203 mm) of the ends of walls, and at a maximum spacing of 10 feet (3048 mm).

Horizontal joint reinforcement shall consist of at least two wires of W1.7 spaced not more than 16 inches (406 mm); or bond beam reinforcement of at least one No. 4 bar spaced not more than 10 feet (3048 mm) shall be provided. Horizontal reinforcement shall also be provided at the bottom and top of wall openings and shall extend not less than 24 inches (610 mm) nor less than 40 bar diameters past the opening; continuously at structurally connected roof and floor levels; and within 16 inches (406 mm) of the top of walls.

R606.12.3 Seismic Design Category D_0 or D_1. Structures in Seismic Design Category D_0 or D_1 shall comply with the requirements of Seismic Design Category C and the additional requirements of this section.

R606.12.3.1 Design requirements. Masonry elements other than those covered by Section R606.12.2.2.2 shall be designed in accordance with the requirements of Chapter 1 and Sections 2.1 and 2.3 of TMS 402, ACI 530/ASCE 5 and shall meet the minimum reinforcement requirements contained in Sections R606.12.3.2 and R606.12.3.2.1. Otherwise, masonry shall be designed in accordance with TMS 403.

Exception: Masonry walls limited to one *story* in height and 9 feet (2743 mm) between lateral supports need not be designed provided they comply with the minimum reinforcement requirements of Sections R606.12.3.2 and R606.12.3.2.1.

TABLE R606.12.2.1
MINIMUM SOLID WALL LENGTH ALONG EXTERIOR WALL LINES

SESIMIC DESIGN CATEGORY	MINIMUM SOLID WALL LENGTH (percent)[a]		
	One story or top story of two story	Wall supporting light-framed second story and roof	Wall supporting masonry second story and roof
Townhouses in C	20	25	35
D_0 or D_1	25	NP	NP
D_2	30	NP	NP

NP = Not permitted, except with design in accordance with the *California Building Code*.

a. For all walls, the minimum required length of solid walls shall be based on the table percent multiplied by the dimension, parallel to the wall direction under consideration, of a rectangle inscribing the overall building plan.

TABLE R606.12.3.2
MINIMUM DISTRIBUTED WALL REINFORCEMENT FOR BUILDING ASSIGNED TO SEISMIC DESIGN CATEGORY D_0 or D_1

NOMINAL WALL THICKNESS (inches)	MINIMUM SUM OF THE VERTICAL AND HORIZONTAL REINFORCEMENT AREAS[a] (square inches per foot)	MINIMUM REINFORCEMENT AS DISTRIBUTED IN BOTH HORIZONTAL AND VERTICAL DIRECTIONS[b] (square inches per foot)	MINUMUM BAR SIZE FOR REINFORCEMENT SPACED AT 48 INCHES
6	0.135	0.047	#4
8	0.183	0.064	#5
10	0.231	0.081	#6
12	0.279	0.098	#6

For SI: 1 inch = 25.4 mm, 1 foot = 304.8 mm, 1 square inch per foot = 2064 mm^2/m.

a. Based on the minimum reinforcing ratio of 0.002 times the gross cross-sectional area of the wall.

b. Based on the minimum reinforcing ratio each direction of 0.0007 times the gross cross-sectional area of the wall.

R606.12.3.2 Minimum reinforcement requirements for masonry walls. Masonry walls other than those covered by Section R606.12.2.2.3 shall be reinforced in both the vertical and horizontal direction. The sum of the cross-sectional area of horizontal and vertical reinforcement shall be at least 0.002 times the gross cross-sectional area of the wall, and the minimum cross-sectional area in each direction shall be not less than 0.0007 times the gross cross-sectional area of the wall. Reinforcement shall be uniformly distributed. Table R606.12.3.2 shows the minimum reinforcing bar sizes required for varying thicknesses of masonry walls. The maximum spacing of reinforcement shall be 48 inches (1219 mm) provided that the walls are solid grouted and constructed of hollow open-end units, hollow units laid with full head joints or two wythes of solid units. The maximum spacing of reinforcement shall be 24 inches (610 mm) for all other masonry.

R606.12.3.2.1 Shear wall reinforcement requirements. The maximum spacing of vertical and horizontal reinforcement shall be the smaller of one-third the length of the shear wall, one-third the height of the shear wall, or 48 inches (1219 mm). The minimum cross-sectional area of vertical reinforcement shall be one-third of the required shear reinforcement. Shear reinforcement shall be anchored around vertical reinforcing bars with a standard hook.

R606.12.3.3 Minimum reinforcement for masonry columns. Lateral ties in masonry columns shall be spaced not more than 8 inches (203 mm) on center and shall be at least $^3/_8$-inch (9.5 mm) diameter. Lateral ties shall be embedded in grout.

R606.12.3.4 Material restrictions. Type N mortar or masonry cement shall not be used as part of the lateral-force-resisting system.

R606.12.3.5 Lateral tie anchorage. Standard hooks for lateral tie anchorage shall be either a 135-degree (2.4 rad) standard hook or a 180-degree (3.2 rad) standard hook.

R606.12.4 Seismic Design Category D_2. All structures in Seismic Design Category D_2 shall comply with the requirements of Seismic Design Category D_1 and to the additional requirements of this section.

R606.12.4.1 Design of elements not part of the lateral force-resisting system. Stack bond masonry that is not part of the lateral force-resisting system shall have a horizontal cross-sectional area of reinforcement of at least 0.0015 times the gross cross-sectional area of masonry. Table R606.12.4.1 shows minimum reinforcing bar sizes for masonry walls. The maximum spacing of horizontal reinforcement shall be 24 inches (610 mm). These elements shall be solidly grouted and shall be constructed of hollow open-end units or two wythes of solid units.

TABLE R606.12.4.1
MINIMUM REINFORCING FOR STACKED BONDED MASONRY WALLS IN SEISMIC DESIGN CATEGORY D_2

NOMINAL WALL THICKNESS (inches)	MINIMUM BAR SIZE SPACED AT 24 INCHES
6	#4
8	#5
10	#5
12	#6

For SI: 1 inch = 25.4 mm.

R606.12.4.2 Design of elements part of the lateral force-resisting system. Stack bond masonry that is part of the lateral force-resisting system shall have a horizontal cross-sectional area of reinforcement of at least 0.0025 times the gross cross-sectional area of masonry. Table R606.12.4.2 shows minimum reinforcing bar sizes for masonry walls. The maximum spacing of horizontal reinforcement shall be 16 inches (406 mm). These elements shall be solidly grouted and shall be constructed of hollow open-end units or two wythes of solid units.

TABLE R606.12.4.2
MINIMUM REINFORCING FOR STACKED BONDED MASONRY WALLS IN SEISMIC DESIGN CATEGORY D_2

NOMINAL WALL THICKNESS (inches)	MINIMUM BAR SIZE SPACED AT 16 INCHES
6	#4
8	#5
10	#5
12	#6

For SI: 1 inch = 25.4 mm.

R606.13 Protection for reinforcement. Bars shall be completely embedded in mortar or grout. Joint reinforcement embedded in horizontal mortar joints shall not have less than $^5/_8$-inch (15.9 mm) mortar coverage from the exposed face. All other reinforcement shall have a minimum coverage of one bar diameter over all bars, but not less than $^3/_4$ inch (19 mm), except where exposed to weather or soil, in which case the minimum coverage shall be 2 inches (51 mm).

R606.14 Beam supports. Beams, girders or other concentrated loads supported by a wall or column shall have a bearing of at least 3 inches (76 mm) in length measured parallel to the beam upon solid masonry not less than 4 inches (102 mm) in thickness, or upon a metal bearing plate of adequate design and dimensions to distribute the load safely, or upon a continuous reinforced masonry member projecting not less than 4 inches (102 mm) from the face of the wall.

R606.14.1 Joist bearing. Joists shall have a bearing of not less than $1^1/_2$ inches (38 mm), except as provided in Section R606.14, and shall be supported in accordance with Figure R606.11(1).

R606.15 Metal accessories. Joint reinforcement, anchors, ties and wire fabric shall conform to the following: ASTM A 82 for wire anchors and ties; ASTM A 36 for plate, headed and bent-bar anchors; ASTM A 510 for corrugated sheet metal anchors and ties; ASTM A 951 for joint reinforcement; ASTM B 227 for copper-clad steel wire ties; or ASTM A 167 for stainless steel hardware.

R606.15.1 Corrosion protection. Minimum corrosion protection of joint reinforcement, anchor ties and wire fabric for use in masonry wall construction shall conform to Table R606.15.1.

TABLE R606.15.1
MINIMUM CORROSION PROTECTION

MASONRY METAL ACCESSORY	STANDARD
Joint reinforcement, interior walls	ASTM A 641, Class 1
Wire ties or anchors in exterior walls completely embedded in mortar or grout	ASTM A 641, Class 3
Wire ties or anchors in exterior walls not completely embedded in mortar or grout	ASTM A 153, Class B-2
Joint reinforcement in exterior walls or interior walls exposed to moist environment	ASTM A 153, Class B-2
Sheet metal ties or anchors exposed to weather	ASTM A 153, Class B-2
Sheet metal ties or anchors completely embedded in mortar or grout	ASTM A 653, Coating Designation G60
Stainless steel hardware for any exposure	ASTM A 167, Type 304

SECTION R607
UNIT MASONRY

R607.1 Mortar. Mortar for use in masonry construction shall comply with ASTM C 270. The type of mortar shall be in accordance with Sections R607.1.1, R607.1.2 and R607.1.3 and shall meet the proportion specifications of Table R607.1 or the property specifications of ASTM C 270.

R607.1.1 Foundation walls. Masonry foundation walls constructed as set forth in Tables R404.1.1(1) through R404.1.1(4) and mortar shall be Type M or S.

R607.1.2 Masonry in Seismic Design Categories A, B and C. Mortar for masonry serving as the lateral-force-resisting system in Seismic Design Categories A, B and C shall be Type M, S or N mortar.

R607.1.3 Masonry in Seismic Design Categories D_0, D_1 and D_2. Mortar for masonry serving as the lateral-force-resisting system in Seismic Design Categories D_0, D_1 and D_2 shall be Type M or S portland cement-lime or mortar cement mortar.

R607.2 Placing mortar and masonry units.

R607.2.1 Bed and head joints. Unless otherwise required or indicated on the project drawings, head and bed joints shall be $^3/_8$ inch (10 mm) thick, except that the thickness of the bed joint of the starting course placed over foundations shall not be less than $^1/_4$ inch (7 mm) and not more than $^3/_4$ inch (19 mm).

R607.2.1.1 Mortar joint thickness tolerance. Mortar joint thickness for load-bearing masonry shall be within the following tolerances from the specified dimensions:

1. Bed joint: + $^1/_8$ inch (3 mm).
2. Head joint: - $^1/_4$ inch (7 mm), + $^3/_8$ inch (10 mm).
3. Collar joints: - $^1/_4$ inch (7 mm), + $^3/_8$ inch (10 mm).

R607.2.2 Masonry unit placement. The mortar shall be sufficiently plastic and units shall be placed with sufficient pressure to extrude mortar from the joint and produce a tight joint. Deep furrowing of bed joints that produces voids shall not be permitted. Any units disturbed to the extent that initial bond is broken after initial placement

TABLE R607.1
MORTAR PROPORTIONS[a, b]

MORTAR	TYPE	PROPORTIONS BY VOLUME (cementitious materials)								Aggregate ratio (measured in damp, loose conditions)
		Portland cement or blended cement	Mortar cement			Masonry cement			Hydrated lime[c] or lime putty	
			M	S	N	M	S	N		
Cement-lime	M	1	—	—	—	—	—	—	$^1/_4$	Not less than $2^1/_4$ and not more than 3 times the sum of separate volumes of lime, if used, and cement
	S	1	—	—	—	—	—	—	over $^1/_4$ to $^1/_2$	
	N	1	—	—	—	—	—	—	over $^1/_2$ to $1^1/_4$	
	O	1	—	—	—	—	—	—	over $1^1/_4$ to $2^1/_2$	
Mortar cement	M	1	—	—	1	—	—	—	—	
	M	—	1	—	—	—	—	—		
	S	$^1/_2$	—	—	1	—	—	—		
	S	—	—	1	—	—	—	—		
	N	—	—	—	1	—	—	—		
	O	—	—	—	1	—	—	—		
Masonry cement	M	1				—	—	1	—	
	M	—				1	—	—		
	S	$^1/_2$				—	—	1		
	S	—				—	1	—		
	N	—				—	—	1		
	O	—				—	—	1		

For SI: 1 cubic foot = 0.0283 m^3, 1 pound = 0.454 kg.

a. For the purpose of these specifications, the weight of 1 cubic foot of the respective materials shall be considered to be as follows:

Portland Cement	94 pounds	Masonry Cement	Weight printed on bag
Mortar Cement	Weight printed on bag	Hydrated Lime	40 pounds
Lime Putty (Quicklime)	80 pounds	Sand, damp and loose	80 pounds of dry sand

b. Two air-entraining materials shall not be combined in mortar.

c. Hydrated lime conforming to the requirements of ASTM C 207.

shall be removed and relaid in fresh mortar. Surfaces to be in contact with mortar shall be clean and free of deleterious materials.

R607.2.2.1 Solid masonry. Solid masonry units shall be laid with full head and bed joints and all interior vertical joints that are designed to receive mortar shall be filled.

R607.2.2.2 Hollow masonry. For hollow masonry units, head and bed joints shall be filled solidly with mortar for a distance in from the face of the unit not less than the thickness of the face shell.

R607.3 Installation of wall ties. The installation of wall ties shall be as follows:

1. The ends of wall ties shall be embedded in mortar joints. Wall ties shall have a minimum of $^5/_8$-inch (15.9 mm) mortar coverage from the exposed face.
2. Wall ties shall not be bent after being embedded in grout or mortar.
3. For solid masonry units, solid grouted hollow units, or hollow units in anchored masonry veneer, wall ties shall be embedded in mortar bed at least $1^1/_2$ inches (38 mm).
4. For hollow masonry units in other than anchored masonry veneer, wall ties shall engage outer face shells by at least $^1/_2$ inch (13 mm).

SECTION R608
MULTIPLE-WYTHE MASONRY

R608.1 General. The facing and backing of multiple-wythe masonry walls shall be bonded in accordance with Section R608.1.1, R608.1.2 or R608.1.3. In cavity walls, neither the facing nor the backing shall be less than 3 inches (76 mm) nominal in thickness and the cavity shall not be more than 4 inches (102 mm) nominal in width. The backing shall be at least as thick as the facing.

Exception: Cavities shall be permitted to exceed the 4-inch (102 mm) nominal dimension provided tie size and tie spacing have been established by calculation.

R608.1.1 Bonding with masonry headers. Bonding with solid or hollow masonry headers shall comply with Sections R608.1.1.1 and R608.1.1.2.

R608.1.1.1 Solid units. Where the facing and backing (adjacent wythes) of solid masonry construction are bonded by means of masonry headers, no less than 4 percent of the wall surface of each face shall be composed of headers extending not less than 3 inches (76 mm) into the backing. The distance between adjacent full-length headers shall not exceed 24 inches (610 mm) either vertically or horizontally. In walls in which a single header does not extend through the wall, headers from the opposite sides shall overlap at least 3 inches (76 mm), or headers from opposite sides shall be covered with another header course overlapping the header below at least 3 inches (76 mm).

R608.1.1.2 Hollow units. Where two or more hollow units are used to make up the thickness of a wall, the stretcher courses shall be bonded at vertical intervals not exceeding 34 inches (864 mm) by lapping at least 3 inches (76 mm) over the unit below, or by lapping at vertical intervals not exceeding 17 inches (432 mm) with units that are at least 50 percent thicker than the units below.

R608.1.2 Bonding with wall ties or joint reinforcement. Bonding with wall ties or joint reinforcement shall comply with Sections R608.1.2.1 through R608.1.2.3.

R608.1.2.1 Bonding with wall ties. Bonding with wall ties, except as required by Section R610, where the facing and backing (adjacent wythes) of masonry walls are bonded with $^3/_{16}$-inch-diameter (5 mm) wall ties embedded in the horizontal mortar joints, there shall be at least one metal tie for each 4.5 square feet (0.418 m^2) of wall area. Ties in alternate courses shall be staggered. The maximum vertical distance between ties shall not exceed 24 inches (610 mm), and the maximum horizontal distance shall not exceed 36 inches (914 mm). Rods or ties bent to rectangular shape shall be used with hollow masonry units laid with the cells vertical. In other walls, the ends of ties shall be bent to 90-degree (0.79 rad) angles to provide hooks no less than 2 inches (51 mm) long. Additional bonding ties shall be provided at all openings, spaced not more than 3 feet (914 mm) apart around the perimeter and within 12 inches (305 mm) of the opening.

R608.1.2.2 Bonding with adjustable wall ties. Where the facing and backing (adjacent wythes) of masonry are bonded with adjustable wall ties, there shall be at least one tie for each 2.67 square feet (0.248 m^2) of wall area. Neither the vertical nor the horizontal spacing of the adjustable wall ties shall exceed 24 inches (610 mm). The maximum vertical offset of bed joints from one wythe to the other shall be 1.25 inches (32 mm). The maximum clearance between connecting parts of the ties shall be $^1/_{16}$ inch (2 mm). When pintle legs are used, ties shall have at least two $^3/_{16}$-inch-diameter (5 mm) legs.

R608.1.2.3 Bonding with prefabricated joint reinforcement. Where the facing and backing (adjacent wythes) of masonry are bonded with prefabricated joint reinforcement, there shall be at least one cross wire serving as a tie for each 2.67 square feet (0.248 m^2) of wall area. The vertical spacing of the joint reinforcement shall not exceed 16 inches (406 mm). Cross wires on prefabricated joint reinforcement shall not be smaller than No. 9 gage. The longitudinal wires shall be embedded in the mortar.

R608.1.3 Bonding with natural or cast stone. Bonding with natural and cast stone shall conform to Sections R608.1.3.1 and R608.1.3.2.

R608.1.3.1 Ashlar masonry. In ashlar masonry, bonder units, uniformly distributed, shall be provided to the extent of not less than 10 percent of the wall area. Such bonder units shall extend not less than 4 inches (102 mm) into the backing wall.

R608.1.3.2 Rubble stone masonry. Rubble stone masonry 24 inches (610 mm) or less in thickness shall

have bonder units with a maximum spacing of 3 feet (914 mm) vertically and 3 feet (914 mm) horizontally, and if the masonry is of greater thickness than 24 inches (610 mm), shall have one bonder unit for each 6 square feet (0.557 m^2) of wall surface on both sides.

R608.2 Masonry bonding pattern. Masonry laid in running and stack bond shall conform to Sections R608.2.1 and R608.2.2.

R608.2.1 Masonry laid in running bond. In each wythe of masonry laid in running bond, head joints in successive courses shall be offset by not less than one-fourth the unit length, or the masonry walls shall be reinforced longitudinally as required in Section R608.2.2.

R608.2.2 Masonry laid in stack bond. Where unit masonry is laid with less head joint offset than in Section R608.2.1, the minimum area of horizontal reinforcement placed in mortar bed joints or in bond beams spaced not more than 48 inches (1219 mm) apart, shall be 0.0007 times the vertical cross-sectional area of the wall.

SECTION R609
GROUTED MASONRY

R609.1 General. Grouted multiple-wythe masonry is a form of construction in which the space between the wythes is solidly filled with grout. It is not necessary for the cores of masonry units to be filled with grout. Grouted hollow unit masonry is a form of construction in which certain cells of hollow units are continuously filled with grout.

R609.1.1 Grout. Grout shall consist of cementitious material and aggregate in accordance with ASTM C 476 and the proportion specifications of Table R609.1.1. Type M or Type S mortar to which sufficient water has been added to produce pouring consistency can be used as grout.

R609.1.2 Grouting requirements. Maximum pour heights and the minimum dimensions of spaces provided for grout placement shall conform to Table R609.1.2. If the work is stopped for one hour or longer, the horizontal construction joints shall be formed by stopping all tiers at the same elevation and with the grout 1 inch (25 mm) below the top.

R609.1.3 Grout space (cleaning). Provision shall be made for cleaning grout space. Mortar projections that project more than $^1/_2$ inch (13 mm) into grout space and any other foreign matter shall be removed from grout space prior to inspection and grouting.

R609.1.4 Grout placement. Grout shall be a plastic mix suitable for pumping without segregation of the constituents and shall be mixed thoroughly. Grout shall be placed by pumping or by an approved alternate method and shall be placed before any initial set occurs and in no case more than $1^1/_2$ hours after water has been added. Grouting shall be done in a continuous pour, in lifts not exceeding 5 feet (1524 mm). It shall be consolidated by puddling or mechanical vibrating during placing and reconsolidated after excess moisture has been absorbed but before plasticity is lost.

TABLE R609.1.1
GROUT PROPORTIONS BY VOLUME FOR MASONRY CONSTRUCTION

TYPE	PORTLAND CEMENT OR BLENDED CEMENT SLAG CEMENT	HYDRATED LIME OR LIME PUTTY	AGGREGATE MEASURED IN A DAMP, LOOSE CONDITION	
			Fine	Coarse
Fine	1	0 to 1/10	$2^1/_4$ to 3 times the sum of the volume of the cementitious materials	—
Coarse	1	0 to 1/10	$2^1/_4$ to 3 times the sum of the volume of the cementitious materials	1 to 2 times the sum of the volumes of the cementitious materials

TABLE R609.1.2
GROUT SPACE DIMENSIONS AND POUR HEIGHTS

GROUT TYPE	GROUT POUR MAXIMUM HEIGHT (feet)	MINIMUM WIDTH OF GROUT SPACES[a, b] (inches)	MINIMUM GROUT[b, c] SPACE DIMENSIONS FOR GROUTING CELLS OF HOLLOW UNITS (inches × inches)
Fine	1	0.75	1.5 × 2
	5	2	2 × 3
	12	2.5	2.5 × 3
	24	3	3 × 3
Coarse	1	1.5	1.5 × 3
	5	2	2.5 × 3
	12	2.5	3 × 3
	24	3	3 × 4

For SI: 1 inch = 25.4 mm, 1 foot = 304.8 mm.

a. For grouting between masonry wythes.

b. Grout space dimension is the clear dimension between any masonry protrusion and shall be increased by the horizontal projection of the diameters of the horizontal bars within the cross section of the grout space.

c. Area of vertical reinforcement shall not exceed 6 percent of the area of the grout space.

4000

R609.1.4.1 Grout pumped through aluminum pipes. Grout shall not be pumped through aluminum pipes.

R609.1.5 Cleanouts. Where required by the building official, cleanouts shall be provided as specified in this section. The cleanouts shall be sealed before grouting and after inspection.

R609.1.5.1 Grouted multiple-wythe masonry. Cleanouts shall be provided at the bottom course of the exterior wythe at each pour of grout where such pour exceeds 5 feet (1524 mm) in height.

R609.1.5.2 Grouted hollow unit masonry. Cleanouts shall be provided at the bottom course of each cell to be grouted at each pour of grout, where such pour exceeds 4 feet (1219 mm) in height.

R609.2 Grouted multiple-wythe masonry. Grouted multiple-wythe masonry shall conform to all the requirements specified in Section R609.1 and the requirements of this section.

R609.2.1 Bonding of backup wythe. Where all interior vertical spaces are filled with grout in multiple-wythe construction, masonry headers shall not be permitted. Metal wall ties shall be used in accordance with Section R608.1.2 to prevent spreading of the wythes and to maintain the vertical alignment of the wall. Wall ties shall be installed in accordance with Section R608.1.2 when the backup wythe in multiple-wythe construction is fully grouted.

R609.2.2 Grout spaces. Fine grout shall be used when interior vertical space to receive grout does not exceed 2 inches (51 mm) in thickness. Interior vertical spaces exceeding 2 inches (51 mm) in thickness shall use coarse or fine grout.

R609.2.3 Grout barriers. Vertical grout barriers or dams shall be built of solid masonry across the grout space the entire height of the wall to control the flow of the grout horizontally. Grout barriers shall not be more than 25 feet (7620 mm) apart. The grouting of any section of a wall between control barriers shall be completed in one day with no interruptions greater than one hour.

R609.3 Reinforced grouted multiple-wythe masonry. Reinforced grouted multiple-wythe masonry shall conform to all the requirements specified in Sections R609.1 and R609.2 and the requirements of this section.

R609.3.1 Construction. The thickness of grout or mortar between masonry units and reinforcement shall not be less than $^1/_4$ inch (7 mm), except that $^1/_4$-inch (7 mm) bars may be laid in horizontal mortar joints at least $^1/_2$ inch (13 mm) thick, and steel wire reinforcement may be laid in horizontal mortar joints at least twice the thickness of the wire diameter.

R609.4 Reinforced hollow unit masonry. Reinforced hollow unit masonry shall conform to all the requirements of Section R609.1 and the requirements of this section.

R609.4.1 Construction. Requirements for construction shall be as follows:

1. Reinforced hollow-unit masonry shall be built to preserve the unobstructed vertical continuity of the cells to be filled. Walls and cross webs forming cells to be filled shall be full-bedded in mortar to prevent leakage of grout. Head and end joints shall be solidly filled with mortar for a distance in from the face of the wall or unit not less than the thickness of the longitudinal face shells. Bond shall be provided by lapping units in successive vertical courses.
2. Cells to be filled shall have vertical alignment sufficient to maintain a clear, unobstructed continuous vertical cell of dimensions prescribed in Table R609.1.2.
3. Vertical reinforcement shall be held in position at top and bottom and at intervals not exceeding 200 diameters of the reinforcement.
4. Cells containing reinforcement shall be filled solidly with grout. Grout shall be poured in lifts of 8-foot (2438 mm) maximum height. When a total grout pour exceeds 8 feet (2438 mm) in height, the grout shall be placed in lifts not exceeding 5 feet (1524 mm) and special inspection during grouting shall be required.
5. Horizontal steel shall be fully embedded by grout in an uninterrupted pour.

SECTION R610
GLASS UNIT MASONRY

R610.1 General. Panels of glass unit masonry located in load-bearing and nonload-bearing exterior and interior walls shall be constructed in accordance with this section.

R610.2 Materials. Hollow glass units shall be partially evacuated and have a minimum average glass face thickness of $^3/_{16}$ inch (5 mm). The surface of units in contact with mortar shall be treated with a polyvinyl butyral coating or latex-based paint. The use of reclaimed units is prohibited.

R610.3 Units. Hollow or solid glass block units shall be standard or thin units.

R610.3.1 Standard units. The specified thickness of standard units shall be at least $3^7/_8$ inches (98 mm).

R610.3.2 Thin units. The specified thickness of thin units shall be at least $3^1/_8$ inches (79 mm) for hollow units and at least 3 inches (76 mm) for solid units.

R610.4 Isolated panels. Isolated panels of glass unit masonry shall conform to the requirements of this section.

R610.4.1 Exterior standard-unit panels. The maximum area of each individual standard-unit panel shall be 144 square feet (13.4 m^2) when the design wind pressure is 20 psf (958 Pa). The maximum area of such panels subjected to design wind pressures other than 20 psf (958 Pa) shall be in accordance with Figure R610.4.1. The maximum panel dimension between structural supports shall be 25 feet (7620 mm) in width or 20 feet (6096 mm) in height.

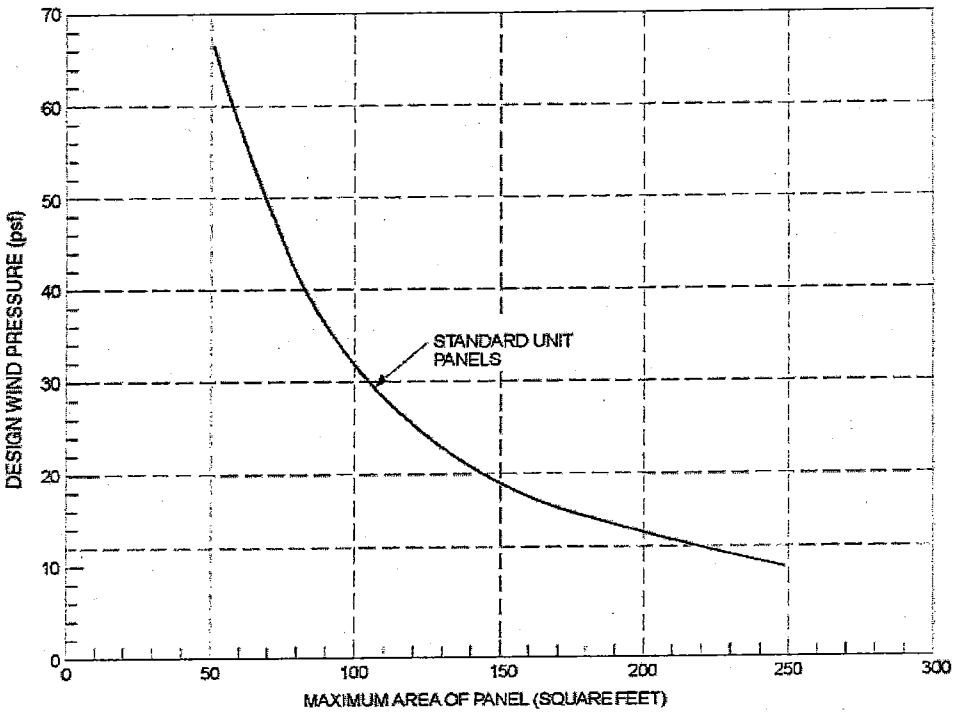

For SI: 1 square foot = 0.0929 m^2, 1 pound per square foot = 0.0479 kPa.

FIGURE R610.4.1
GLASS UNIT MASONRY DESIGN WIND LOAD RESISTANCE

R610.4.2 Exterior thin-unit panels. The maximum area of each individual thin-unit panel shall be 85 square feet (7.9 m^2). The maximum dimension between structural supports shall be 15 feet (4572 mm) in width or 10 feet (3048 mm) in height. Thin units shall not be used in applications where the design wind pressure as stated in Table R301.2(1) exceeds 20 psf (958 Pa).

R610.4.3 Interior panels. The maximum area of each individual standard-unit panel shall be 250 square feet (23.2 m^2). The maximum area of each thin-unit panel shall be 150 square feet (13.9 m^2). The maximum dimension between structural supports shall be 25 feet (7620 mm) in width or 20 feet (6096 mm) in height.

R610.4.4 Curved panels. The width of curved panels shall conform to the requirements of Sections R610.4.1, R610.4.2 and R610.4.3, except additional structural supports shall be provided at locations where a curved section joins a straight section, and at inflection points in multi-curved walls.

R610.5 Panel support. Glass unit masonry panels shall conform to the support requirements of this section.

R610.5.1 Deflection. The maximum total deflection of structural members that support glass unit masonry shall not exceed $^1/_{600}$.

R610.5.2 Lateral support. Glass unit masonry panels shall be laterally supported along the top and sides of the panel. Lateral supports for glass unit masonry panels shall be designed to resist a minimum of 200 pounds per lineal feet (2918 N/m) of panel, or the actual applied loads, whichever is greater. Except for single unit panels, lateral support shall be provided by panel anchors along the top and sides spaced a maximum of 16 inches (406 mm) on center or by channel-type restraints. Single unit panels shall be supported by channel-type restraints.

Exceptions:

1. Lateral support is not required at the top of panels that are one unit wide.
2. Lateral support is not required at the sides of panels that are one unit high.

R610.5.2.1 Panel anchor restraints. Panel anchors shall be spaced a maximum of 16 inches (406 mm) on center in both jambs and across the head. Panel anchors shall be embedded a minimum of 12 inches (305 mm) and shall be provided with two fasteners so as to resist the loads specified in Section R610.5.2.

R610.5.2.2 Channel-type restraints. Glass unit masonry panels shall be recessed at least 1 inch (25 mm) within channels and chases. Channel-type restraints shall be oversized to accommodate expansion material in the opening, packing and sealant between the framing restraints, and the glass unit masonry perimeter units.

R610.6 Sills. Before bedding of glass units, the sill area shall be covered with a water base asphaltic emulsion coating. The coating shall be a minimum of $^1/_8$ inch (3 mm) thick.

R610.7 Expansion joints. Glass unit masonry panels shall be provided with expansion joints along the top and sides at all structural supports. Expansion joints shall be a minimum of $^3/_8$ inch (10 mm) in thickness and shall have sufficient thickness to accommodate displacements of the supporting structure. Expansion joints shall be entirely free of mortar and other debris and shall be filled with resilient material.

R610.8 Mortar. Glass unit masonry shall be laid with Type S or N mortar. Mortar shall not be retempered after initial set. Mortar unused within $1^1/_2$ hours after initial mixing shall be discarded.

R610.9 Reinforcement. Glass unit masonry panels shall have horizontal joint reinforcement spaced a maximum of 16 inches (406 mm) on center located in the mortar bed joint. Horizontal joint reinforcement shall extend the entire length of the panel but shall not extend across expansion joints. Longitudinal wires shall be lapped a minimum of 6 inches (152 mm) at splices. Joint reinforcement shall be placed in the bed joint immediately below and above openings in the panel. The reinforcement shall have not less than two parallel longitudinal wires of size W1.7 or greater, and have welded cross wires of size W1.7 or greater.

R610.10 Placement. Glass units shall be placed so head and bed joints are filled solidly. Mortar shall not be furrowed. Head and bed joints of glass unit masonry shall be $^1/_4$ inch (6.4 mm) thick, except that vertical joint thickness of radial panels shall not be less than $^1/_8$ inch (3 mm) or greater than $^5/_8$ inch (16 mm). The bed joint thickness tolerance shall be minus $^1/_{16}$ inch (1.6 mm) and plus $^1/_8$ inch (3 mm). The head joint thickness tolerance shall be plus or minus $^1/_8$ inch (3 mm).

SECTION R611
EXTERIOR CONCRETE WALL CONSTRUCTION

R611.1 General. Exterior concrete walls shall be designed and constructed in accordance with the provisions of this section or in accordance with the provisions of PCA 100 or ACI 318. When PCA 100, ACI 318 or the provisions of this section are used to design concrete walls, project drawings, typical details and specifications *shall not exempt construction documents from the requirement to be stamped by a California licensed architect or engineer. Notwithstanding other sections of law, the law establishing these provisions is found in Business and Professions Code Sections 5537.1 and 6737.1.*

R611.1.1 Interior construction. These provisions are based on the assumption that interior walls and partitions, both load-bearing and nonload-bearing, floors and roof/ceiling assemblies are constructed of light-framed construction complying with the limitations of this code and the additional limitations of Section R611.2. Design and construction of light-framed assemblies shall be in accordance with the applicable provisions of this code. Where second-story exterior walls are of light-framed construction, they shall be designed and constructed as required by this code.

Aspects of concrete construction not specifically addressed by this code, including interior concrete walls, shall comply with ACI 318.

R611.1.2 Other concrete walls. Exterior concrete walls constructed in accordance with this code shall comply with the shapes and minimum concrete cross-sectional dimensions of Table R611.3. Other types of forming systems resulting in concrete walls not in compliance with this section shall be designed in accordance with ACI 318.

R611.2 Applicability limits. The provisions of this section shall apply to the construction of exterior concrete walls for buildings not greater than 60 feet (18 288 mm) in plan dimensions, floors with clear spans not greater than 32 feet (9754 mm) and roofs with clear spans not greater than 40 feet (12 192 mm). Buildings shall not exceed 35 feet (10 668 mm) in mean roof height or two stories in height above-grade. Floor/ceiling dead loads shall not exceed 10 pounds per square foot (479 Pa), roof/ceiling dead loads shall not exceed 15 pounds per square foot (718 Pa) and attic live loads shall not exceed 20 pounds per square foot (958 Pa). Roof overhangs shall not exceed 2 feet (610 mm) of horizontal projection beyond the exterior wall and the dead load of the overhangs shall not exceed 8 pounds per square foot (383 Pa).

Walls constructed in accordance with the provisions of this section shall be limited to buildings subjected to a maximum design wind speed of 130 miles per hour (58 m/s) Exposure B, 110 miles per hour (49 m/s) Exposure C and 100 miles per hour (45 m/s) Exposure D. Walls constructed in accordance with the provisions of this section shall be limited to detached one- and two-family dwellings and townhouses assigned to Seismic Design Category A or B, and detached one- and two-family dwellings assigned to Seismic Design Category C.

Buildings that are not within the scope of this section shall be designed in accordance with PCA 100 or ACI 318.

R611.3 Concrete wall systems. Concrete walls constructed in accordance with these provisions shall comply with the shapes and minimum concrete cross-sectional dimensions of Table R611.3.

R611.3.1 Flat wall systems. Flat concrete wall systems shall comply with Table R611.3 and Figure R611.3(1) and have a minimum nominal thickness of 4 inches (102 mm).

R611.3.2 Waffle-grid wall systems. Waffle-grid wall systems shall comply with Table R611.3 and Figure R611.3(2). and shall have a minimum nominal thickness of 6 inches (152 mm) for the horizontal and vertical concrete members (cores). The core and web dimensions shall comply with Table R611. 3. The maximum weight of waffle-grid walls shall comply with Table R611.3.

R611.3.3 Screen-grid wall systems. Screen-grid wall systems shall comply with Table R611.3 and Figure R611.3(3) and shall have a minimum nominal thickness of 6 inches (152 mm) for the horizontal and vertical concrete members (cores). The core dimensions shall comply with Table R611.3. The maximum weight of screen-grid walls shall comply with Table R611.3.

TABLE R611.3
DIMENSIONAL REQUIREMENTS FOR WALLS[a, b]

WALL TYPE AND NOMINAL THICKNESS	MAXIMUM WALL WEIGHT[c] (psf)	MINIMUM WIDTH, W, OF VERTICAL CORES (inches)	MINIMUM THICKNESS, T, OF VERTICAL CORES (inches)	MAXIMUM SPACING OF VERTICAL CORES (inches)	MAXIMUM SPACING OF HORIZONTAL CORES (inches)	MINIMUM WEB THICKNESS (inches)
4″ Flat[d]	50	N/A	N/A	N/A	N/A	N/A
6″ Flat[d]	75	N/A	N/A	N/A	N/A	N/A
8″ Flat[d]	100	N/A	N/A	N/A	N/A	N/A
10″ Flat[d]	125	N/A	N/A	N/A	N/A	N/A
6″ Waffle-grid	56	8[e]	5.5[e]	12	16	2
8″ Waffle-grid	76	8[f]	8[f]	12	16	2
6″ Screen-grid	53	6.25[g]	6.25[g]	12	12	N/A

For SI: 1 inch = 25.4 mm; 1 pound per square foot = 0.0479 kPa, 1 pound per cubic foot = 2402.77 kg/m^3, 1 square inch = 645.16 mm^2, 1 inch^4 = 42 cm^4.

a. Width "W," thickness "T," spacing and web thickness, refer to Figures R611.3(2) and R611.3(3).

b. N/A indicates not applicable.

c. Wall weight is based on a unit weight of concrete of 150 pcf. For flat walls the weight is based on the nominal thickness. The tabulated values do not include any allowance for interior and exterior finishes.

d. Nominal wall thickness. The actual as-built thickness of a flat wall shall not be more than $^1/_2$-inch less or more than $^1/_4$-inch more than the nominal dimension indicated.

e. Vertical core is assumed to be elliptical-shaped. Another shape core is permitted provided the minimum thickness is 5 inches, the moment of inertia, *I*, about the centerline of the wall (ignoring the web) is not less than 65 inch^4, and the area, *A*, is not less than 31.25 in^2. The width used to calculate *A* and *I* shall not exceed 8 inches.

f. Vertical core is assumed to be circular. Another shape core is permitted provided the minimum thickness is 7 inches, the moment of inertia, *I*, about the centerline of the wall (ignoring the web) is not less than 200 in^4, and the area, *A*, is not less than 49 square inch. The width used to calculate *A* and *I* shall not exceed 8 inches.

g. Vertical core is assumed to be circular. Another shape core is permitted provided the minimum thickness is 5.5 inches, the moment of inertia, *I*, about the centerline of the wall is not less than 76 inch^4, and the area, *A*, is not less than 30.25 square inch. The width used to calculate *A* and *I* shall not exceed 6.25 inches.

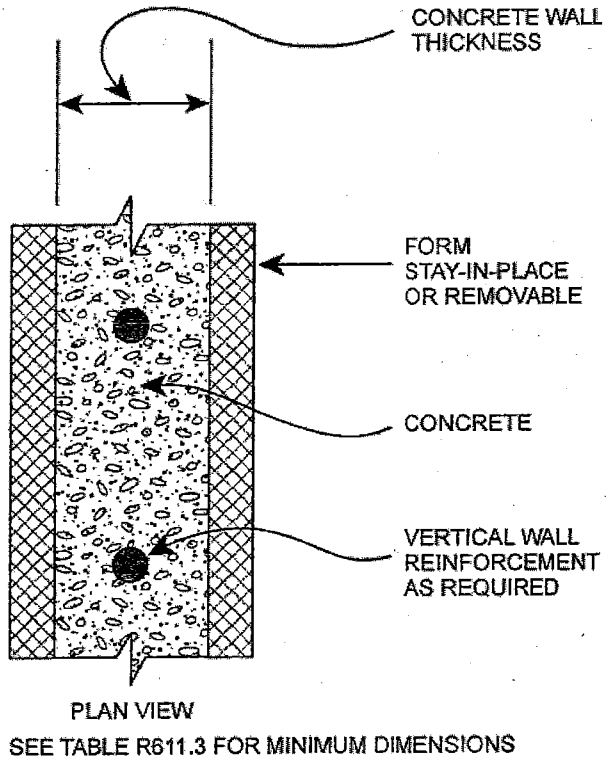

FIGURE R611.3(1)
FLAT WALL SYSTEM

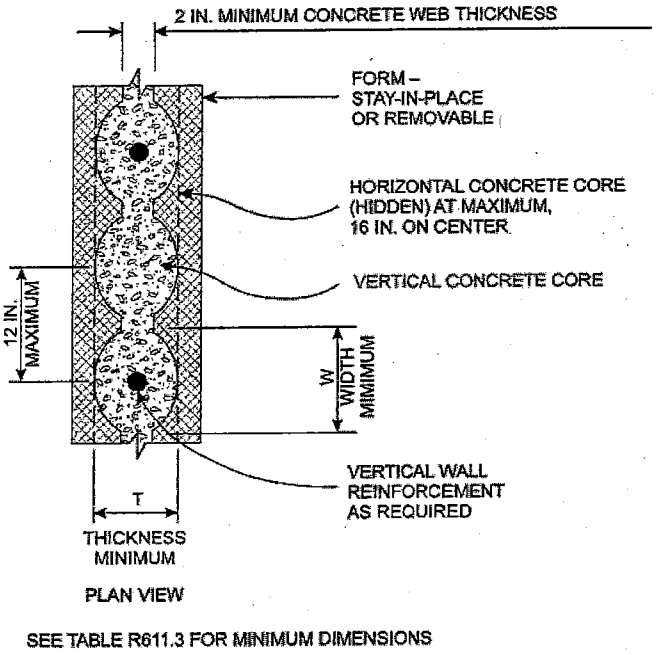

For SI: 1 inch = 25.4 mm.

FIGURE R611.3(2)
WAFFLE-GRID WALL SYSTEM

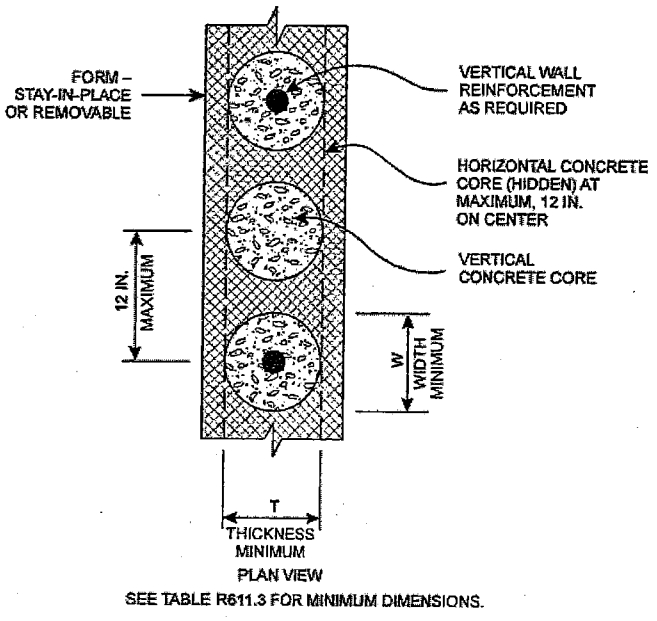

For SI: 1 inch = 25.4 mm.

FIGURE R611.3(3)
SCREEN-GRID WALL SYSTEM

R611.4 Stay-in-place forms. Stay-in-place concrete forms shall comply with this section.

R611.4.1 Surface burning characteristics. The flame spread index and smoke-developed index of forming material, other than foam plastic, left exposed on the interior shall comply with Section R302.9. The surface burning characteristics of foam plastic used in insulating concrete forms shall comply with Section R316.3.

R611.4.2 Interior covering. Stay-in-place forms constructed of rigid foam plastic shall be protected on the interior of the building as required by Sections R316.4 and R702.3.4. Where gypsum board is used to protect the foam plastic, it shall be installed with a mechanical fastening system. Use of adhesives is permitted in addition to mechanical fasteners.

R611.4.3 Exterior wall covering. Stay-in-place forms constructed of rigid foam plastics shall be protected from sunlight and physical damage by the application of an approved exterior wall covering complying with this code. Exterior surfaces of other stay-in-place forming systems shall be protected in accordance with this code.

Requirements for installation of masonry veneer, stucco and other finishes on the exterior of concrete walls and other construction details not covered in this section shall comply with the requirements of this code.

R611.4.4 Flat ICF wall systems. Flat ICF wall system forms shall conform to ASTM E 2634.

R611.5 Materials. Materials used in the construction of concrete walls shall comply with this section.

R611.5.1 Concrete and materials for concrete. Materials used in concrete, and the concrete itself, shall conform to requirements of this section, or ACI 318.

R611.5.1.1 Concrete mixing and delivery. Mixing and delivery of concrete shall comply with ASTM C 94 or ASTM C 685.

R611.5.1.2 Maximum aggregate size. The nominal maximum size of coarse aggregate shall not exceed one-fifth the narrowest distance between sides of forms, or three-fourths the clear spacing between reinforcing bars or between a bar and the side of the form.

Exception: When approved, these limitations shall not apply where removable forms are used and workability and methods of consolidation permit concrete to be placed without honeycombs or voids.

R611.5.1.3 Proportioning and slump of concrete. Proportions of materials for concrete shall be established to provide workability and consistency to permit concrete to be worked readily into forms and around reinforcement under conditions of placement to be employed, without segregation or excessive bleeding. Slump of concrete placed in removable forms shall not exceed 6 inches (152 mm).

Exception: When approved, the slump is permitted to exceed 6 inches (152 mm) for concrete mixtures that are resistant to segregation, and are in accordance with the form manufacturer's recommendations.

Slump of concrete placed in stay-in-place forms shall exceed 6 inches (152 mm). Slump of concrete shall be determined in accordance with ASTM C 143.

R611.5.1.4 Compressive strength. The minimum specified compressive strength of concrete, f'_c, shall comply with Section R402.2 and shall be not less than 2,500 pounds per square inch (17.2 MPa) at 28 days.

R611.5.1.5 Consolidation of concrete. Concrete shall be consolidated by suitable means during placement and shall be worked around embedded items and reinforcement and into corners of forms. Where stay-in-place forms are used, concrete shall be consolidated by internal vibration.

Exception: When approved, self-consolidating concrete mixtures with slumps equal to or greater than 8 inches (203 mm) that are specifically designed for placement without internal vibration need not be internally vibrated.

R611.5.2 Steel reinforcement and anchor bolts.

R611.5.2.1 Steel reinforcement. Steel reinforcement shall comply with ASTM A 615, ASTM A 706, or ASTM A 996. ASTM A 996 bars produced from rail steel shall be Type R.

R611.5.2.2 Anchor bolts. Anchor bolts for use with connection details in accordance with Figures R611.9(1) through R611.9(12) shall be bolts with heads complying with ASTM A 307 or ASTM F 1554. ASTM A 307 bolts shall be Grade A (i.e., with heads). ASTM F 1554 bolts shall be Grade 36 minimum. Instead of bolts with heads, it is permissible to use rods with threads on both ends fabricated from steel comply-

ing with ASTM A 36. The threaded end of the rod to be embedded in the concrete shall be provided with a hex or square nut.

R611.5.2.3 Sheet steel angles and tension tie straps. Angles and tension tie straps for use with connection details in accordance with Figures R611.9(1) through R611.9(12) shall be fabricated from sheet steel complying with ASTM A 653 SS, ASTM A 792 SS, or ASTM A 875 SS. The steel shall be minimum Grade 33 unless a higher grade is required by the applicable figure.

R611.5.3 Form materials and form ties. Forms shall be made of wood, steel, aluminum, plastic, a composite of cement and foam insulation, a composite of cement and wood chips, or other approved material suitable for supporting and containing concrete. Forms shall provide sufficient strength to contain concrete during the concrete placement operation.

Form ties shall be steel, solid plastic, foam plastic, a composite of cement and wood chips, a composite of cement and foam plastic, or other suitable material capable of resisting the forces created by fluid pressure of fresh concrete.

R611.5.4 Reinforcement installation details.

R611.5.4.1 Support and cover. Reinforcement shall be secured in the proper location in the forms with tie wire or other bar support system such that displacement will not occur during the concrete placement operation. Steel reinforcement in concrete cast against the earth shall have a minimum cover of 3 inches (76 mm). Minimum cover for reinforcement in concrete cast in removable forms that will be exposed to the earth or weather shall be $1^1/_2$ inches (38 mm) for No. 5 bars and smaller, and 2 inches (50 mm) for No. 6 bars and

TABLE R611.5.4(1)
LAP SPLICE AND TENSION DEVELOPMENT LENGTHS

	BAR SIZE NO.	YIELD STRENGTH OF STEEL, f_y- psi (MPa)	
		40,000 (280)	60,000 (420)
		Splice length or tension development length (inches)	
Lap splice length-tension	4	20	30
	5	25	38
	6	30	45
Tension development length for straight bar	4	15	23
	5	19	28
	6	23	34
Tension development length for: a. 90-degree and 180-degree standard hooks with not less than $2^1/_2$ inches of side cover perpendicular to plane of hook, and b. 90-degree standard hooks with not less than 2 inches of cover on the bar extension beyond the hook.	4	6	9
	5	7	11
	6	8	13
Tension development length for bar with 90-degree or 180-degree standard hook having less cover than required above.	4	8	12
	5	10	15
	6	12	18

For SI: 1 inch = 25.4 mm.

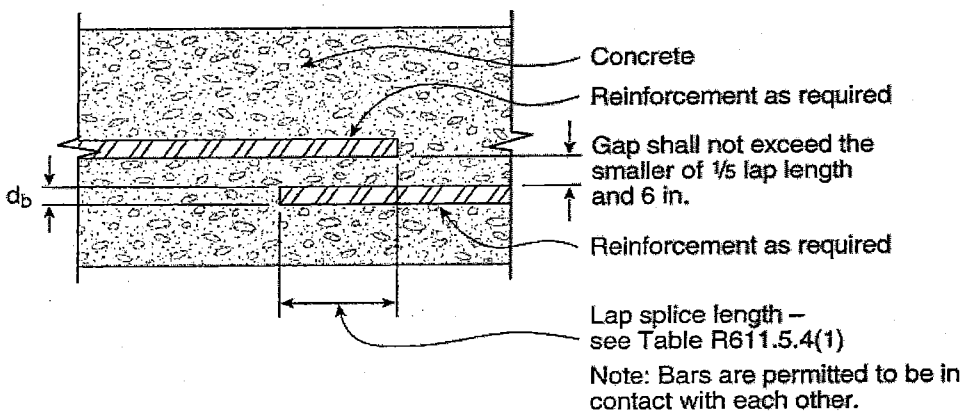

For SI: 1 inch = 25.4 mm.

FIGURE R611.5.4(1)
LAP SPLICES

4006

larger. For concrete cast in removable forms that will not be exposed to the earth or weather, and for concrete cast in stay-in-place forms, minimum cover shall be $^3/_4$ inch (19 mm). The minus tolerance for cover shall not exceed the smaller of one-third the required cover and $^3/_8$ inch (10 mm). See Section R611.5.4.4 for cover requirements for hooks of bars developed in tension.

R611.5.4.2 Location of reinforcement in walls. For location of reinforcement in foundation walls and above-grade walls, see Sections R404.1.2.3.7.2 and R611.6.5, respectively.

R611.5.4.3 Lap splices. Vertical and horizontal wall reinforcement required by Sections R611.6 and R611.7 shall be the longest lengths practical. Where splices are necessary in reinforcement, the length of lap splices shall be in accordance with Table R611.5.4(1) and Figure R611.5.4 (1). The maximum gap between noncontact parallel bars at a lap splice shall not exceed the smaller of one-fifth the required lap length and 6 inches (152 mm). See Figure R611.5.4(1).

R611.5.4.4 Development of bars in tension. Where bars are required to be developed in tension by other provisions of this code, development lengths and cover for hooks and bar extensions shall comply with Table R611.5.4(1) and Figure R611.5.4 (2). The development lengths shown in Table R611.5.4(1) also apply to bundled bars in lintels installed in accordance with Section R611.8.2.2.

R611.5.4.5 Standard hooks. Where reinforcement is required by this code to terminate with a standard hook, the hook shall comply with Figure R611.5.4(3).

R611.5.4.6 Webs of waffle-grid walls. Reinforcement, including stirrups, shall not be placed in webs of waffle-grid walls, including lintels. Webs are permitted to have form ties.

R611.5.4.7 Alternate grade of reinforcement and spacing. Where tables in Sections R404.1.2 and R611.6 specify vertical wall reinforcement based on minimum bar size and maximum spacing, which are based on Grade 60 (420 MPa) steel reinforcement, different size bars and/or bars made from a different grade of steel are permitted provided an equivalent area of steel per linear foot of wall is provided. Use of Table R611.5.4(2) is permitted to determine the maximum bar spacing for different bar sizes than specified in the tables and/or bars made from a different grade of steel. Bars shall not be spaced less than one-half the wall thickness, or more than 48 inches (1219 mm) on center.

R611.5.5 Construction joints in walls. Construction joints shall be made and located to not impair the strength of the wall. Construction joints in plain concrete walls, including walls required to have not less than No. 4 bars at 48 inches (1219 mm) on center by Section R611.6, shall be located at points of lateral support, and a minimum of one No. 4 bar shall extend across the construction joint at a spacing not to exceed 24 inches (610 mm) on center. Construction joint reinforcement shall have a minimum of 12 inches (305 mm) embedment on both sides of the joint. Construction joints in reinforced concrete walls shall be located in the middle third of the span between lateral supports, or located and constructed as required for joints in plain concrete walls.

Exception: Vertical wall reinforcement required by this code is permitted to be used in lieu of construction joint reinforcement, provided the spacing does not exceed 24 inches (610 mm), or the combination of wall reinforcement and No. 4 bars described above does not exceed 24 inches (610 mm).

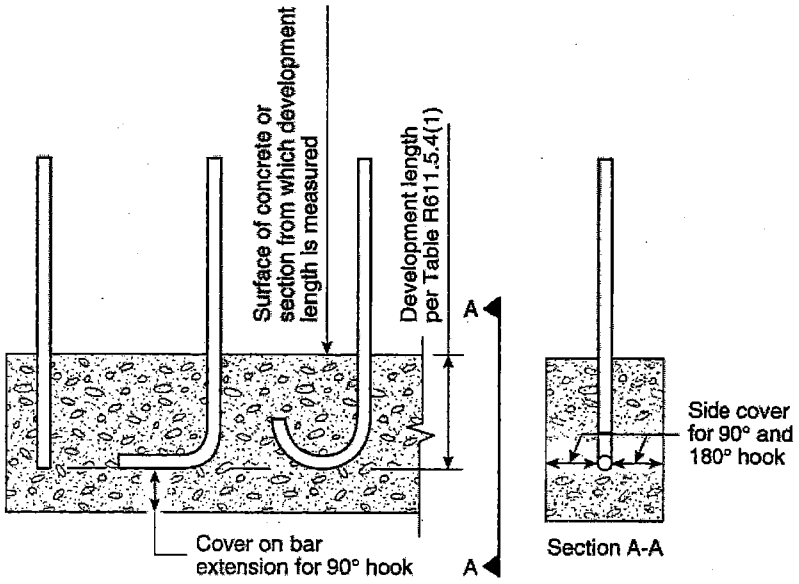

For SI: 1 degree = 0.0175 rad.

FIGURE R611.5.4(2)
DEVELOPMENT LENGTH AND COVER FOR HOOKS AND BAR EXTENSION

TABLE R611.5.4(2)
MAXIMUM SPACING FOR ALTERNATIVE BAR SIZE AND/OR ALTERNATIVE GRADE OF STEEL[a, b, c]

BAR SPACING FROM APPLICABLE TABLE IN SECTION R611.6 (inches)	BAR SIZE FROM APPLICABLE TABLE IN SECTION R611.6														
	#4					#5					#6				
	Alternate bar size and/or alternate grade of steel desired														
	Grade 60		Grade 40			Grade 60		Grade 40			Grade 60		Grade 40		
	#5	#6	#4	#5	#6	#4	#6	#4	#5	#6	#4	#5	#4	#5	#6
	Maximum spacing for alternate bar size and/or alternate grade of steel (inches)														
8	12	18	5	8	12	5	11	3	5	8	4	6	2	4	5
9	14	20	6	9	13	6	13	4	6	9	4	6	3	4	6
10	16	22	7	10	15	6	14	4	7	9	5	7	3	5	7
11	17	24	7	11	16	7	16	5	7	10	5	8	3	5	7
12	19	26	8	12	18	8	17	5	8	11	5	8	4	6	8
13	20	29	9	13	19	8	18	6	9	12	6	9	4	6	9
14	22	31	9	14	21	9	20	6	9	13	6	10	4	7	9
15	23	33	10	16	22	10	21	6	10	14	7	11	5	7	10
16	25	35	11	17	23	10	23	7	11	15	7	11	5	8	11
17	26	37	11	18	25	11	24	7	11	16	8	12	5	8	11
18	28	40	12	19	26	12	26	8	12	17	8	13	5	8	12
19	29	42	13	20	28	12	27	8	13	18	9	13	6	9	13
20	31	44	13	21	29	13	28	9	13	19	9	14	6	9	13
21	33	46	14	22	31	14	30	9	14	20	10	15	6	10	14
22	34	48	15	23	32	14	31	9	15	21	10	16	7	10	15
23	36	48	15	24	34	15	33	10	15	22	10	16	7	11	15
24	37	48	16	25	35	15	34	10	16	23	11	17	7	11	16
25	39	48	17	26	37	16	35	11	17	24	11	18	8	12	17
26	40	48	17	27	38	17	37	11	17	25	12	18	8	12	17
27	42	48	18	28	40	17	38	12	18	26	12	19	8	13	18
28	43	48	19	29	41	18	40	12	19	26	13	20	8	13	19
29	45	48	19	30	43	19	41	12	19	27	13	20	9	14	19
30	47	48	20	31	44	19	43	13	20	28	14	21	9	14	20
31	48	48	21	32	45	20	44	13	21	29	14	22	9	15	21
32	48	48	21	33	47	21	45	14	21	30	15	23	10	15	21
33	48	48	22	34	48	21	47	14	22	31	15	23	10	16	22
34	48	48	23	35	48	22	48	15	23	32	15	24	10	16	23
35	48	48	23	36	48	23	48	15	23	33	16	25	11	16	23
36	48	48	24	37	48	23	48	15	24	34	16	25	11	17	24
37	48	48	25	38	48	24	48	16	25	35	17	26	11	17	25
38	48	48	25	39	48	25	48	16	25	36	17	27	12	18	25
39	48	48	26	40	48	25	48	17	26	37	18	27	12	18	26
40	48	48	27	41	48	26	48	17	27	38	18	28	12	19	27
41	48	48	27	42	48	26	48	18	27	39	19	29	12	19	27
42	48	48	28	43	48	27	48	18	28	40	19	30	13	20	28
43	48	48	29	44	48	28	48	18	29	41	20	30	13	20	29
44	48	48	29	45	48	28	48	19	29	42	20	31	13	21	29
45	48	48	30	47	48	29	48	19	30	43	20	32	14	21	30
46	48	48	31	48	48	30	48	20	31	44	21	32	14	22	31
47	48	48	31	48	48	30	48	20	31	44	21	33	14	22	31
48	48	48	32	48	48	31	48	21	32	45	22	34	15	23	32

For SI: 1 inch = 25.4 mm.

a. This table is for use with tables in Section R611.6 that specify the minimum bar size and maximum spacing of vertical wall reinforcement for foundation walls and above-grade walls. Reinforcement specified in tables in Section R611.6 is based on Grade 60 (420 MPa) steel reinforcement.

b. Bar spacing shall not exceed 48 inches on center and shall not be less than one-half the nominal wall thickness.

c. For Grade 50 (350 MPa) steel bars (ASTM A 996, Type R), use spacing for Grade 40 (280 MPa) bars or interpolate between Grade 40 (280 MPa) and Grade 60 (420 MPa).

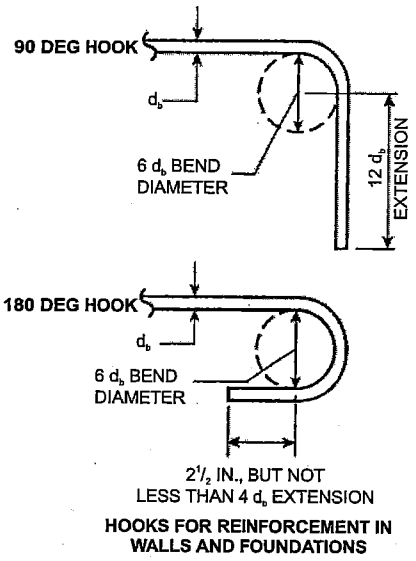

HOOKS FOR REINFORCEMENT IN WALLS AND FOUNDATIONS

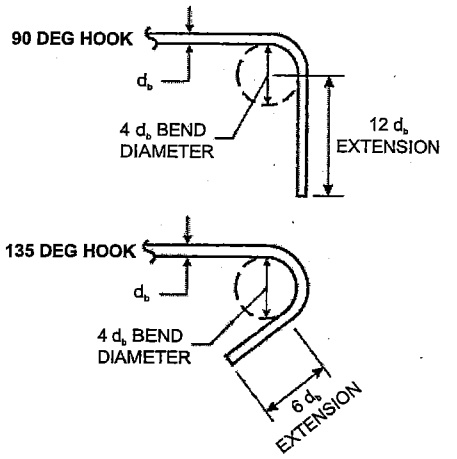

HOOKS FOR STIRRUPS IN LINTELS

For SI: 1 inch = 25.4 mm, 1 degree = 0.0175 rad.

FIGURE R611.5.4(3)
STANDARD HOOKS

R611.6 Above-grade wall requirements.

R611.6.1 General. The minimum thickness of load-bearing and nonload-bearing above-grade walls and reinforcement shall be as set forth in the appropriate table in this section based on the type of wall form to be used. Where the wall or building is not within the limitations of Section R611.2, design is required by the tables in this section, or the wall is not within the scope of the tables in this section, the wall shall be designed in accordance with ACI 318.

Above-grade concrete walls shall be constructed in accordance with this section and Figure R611.6(1), R611.6(2), R611.6(3) or R611.6(4). Above-grade concrete walls that are continuous with stem walls and not laterally supported by the slab-on-ground shall be designed and constructed in accordance with this section. Concrete walls shall be supported on continuous foundation walls or slabs-on-ground that are monolithic with the footing in accordance with Section R403. The minimum length of solid wall without openings shall be in accordance with Section R611.7. Reinforcement around openings, including lintels, shall be in accordance with Section R611.8. Lateral support for above-grade walls in the out-of-plane direction shall be provided by connections to the floor framing system, if applicable, and to ceiling and roof framing systems in accordance with Section R611.9. The wall thickness shall be equal to or greater than the thickness of the wall in the story above.

R611.6.2 Wall reinforcement for wind. Vertical wall reinforcement for resistance to out-of-plane wind forces shall be determined from Table R611.6(1), R611.6(2), R611.6(3) or R611.6(4). Also, see Sections R611.7.2.2.2 and R611.7.2.2.3. There shall be a vertical bar at all corners of exterior walls. Unless more horizontal reinforcement is required by Section R611.7.2.2.1, the minimum horizontal reinforcement shall be four No. 4 bars [Grade 40 (280 MPa)] placed as follows: top bar within 12 inches (305 mm) of the top of the wall, bottom bar within 12 inches (305 mm) of the finish floor, and one bar each at approximately one-third and two-thirds of the wall height.

R611.6.3 Continuity of wall reinforcement between stories. Vertical reinforcement required by this section shall be continuous between elements providing lateral support for the wall. Reinforcement in the wall of the story above shall be continuous with the reinforcement in the wall of the story below, or the foundation wall, if applicable. Lap splices, where required, shall comply with Section R611.5.4.3 and Figure R611.5.4(1). Where the above-grade wall is supported by a monolithic slab-on-ground and footing, dowel bars with a size and spacing to match the vertical above-grade concrete wall reinforcement shall be embedded in the monolithic slab-on-ground and footing the distance required to develop the dowel bar in tension in accordance with Section R611.5.4.4 and Figure R611.5.4(2) and lap-spliced with the above-grade wall reinforcement in accordance with Section R611.5.4.3 and Figure R611.5.4(1).

Exception: Where reinforcement in the wall above cannot be made continuous with the reinforcement in the wall below, the bottom of the reinforcement in the wall above shall be terminated in accordance with one of the following:

1. Extend below the top of the floor the distance required to develop the bar in tension in accordance with Section R611.5.4.4 and Figure R611.5.4(2).
2. Lap-spliced in accordance with Section R611.5.4.3 and Figure R611.5.4(1) with a dowel bar that extends into the wall below the distance required to develop the bar in tension in accordance with Section R611.5.4.4 and Figure R611.5.4(2).

Where a construction joint in the wall is located below the level of the floor and less than the distance required to develop the bar in tension, the distance required to develop the bar in tension shall be measured from the top of the concrete below the joint. See Section R611.5.5.

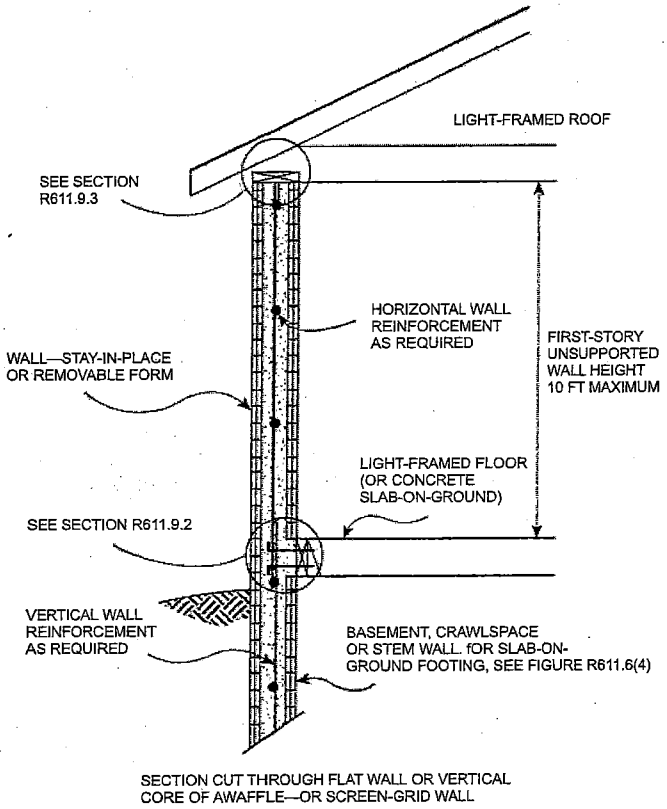

For SI: 1 foot = 304.8 mm.

FIGURE R611.6(1)
ABOVE-GRADE CONCRETE WALL CONSTRUCTION ONE

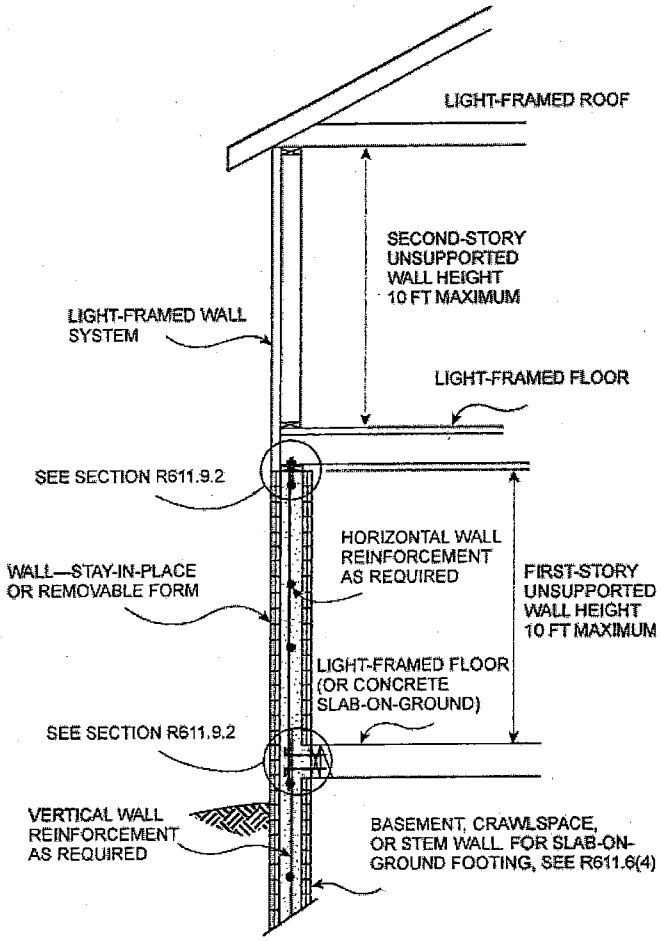

For SI: 1 foot = 304.8 mm.

FIGURE R611.6(2)
ABOVE-GRADE CONCRETE WALL CONSTRUCTION CONCRETE FIRST-STORY AND LIGHT-FRAMED SECOND-STORY

R611.6.4 Termination of reinforcement. Where indicated in Items 1 through 3, vertical wall reinforcement in the top-most story with concrete walls shall be terminated with a 90-degree (1.57 rad) standard hook complying with Section R611.5.4.5 and Figure R611.5.4(3).

1. Vertical bars adjacent to door and window openings required by Section R611.8.1.2.
2. Vertical bars at the ends of required solid wall segments. See Section R611.7.2.2.2.
3. Vertical bars (other than end bars, see Item 2) used as shear reinforcement in required solid wall segments where the reduction factor for design strength, R_3, used is based on the wall having horizontal and vertical shear reinforcement. See Section R611.7.2.2.3.

The bar extension of the hook shall be oriented parallel to the horizontal wall reinforcement and be within 4 inches (102 mm) of the top of the wall.

Horizontal reinforcement shall be continuous around the building corners by bending one of the bars and lap-splicing it with the bar in the other wall in accordance with Section R611.5.4.3 and Figure R611.5.4(1).

Exception: In lieu of bending horizontal reinforcement at corners, separate bent reinforcing bars shall be permitted provided that the bent bar is lap-spliced with the horizontal reinforcement in both walls in accordance with Section R611.5.4.3 and Figure R611.5.4(1).

In required solid wall segments where the reduction factor for design strength, R_3, is based on the wall having horizontal and vertical shear reinforcement in accordance with Section R611.7.2.2.1, horizontal wall reinforcement shall be terminated with a standard hook complying with Section R611.5.4.5 and Figure R611.5.4(3) or in a lap-splice, except at corners where the reinforcement shall be continuous as required above.

R611.6.5 Location of reinforcement in wall. Except for vertical reinforcement at the ends of required solid wall segments, which shall be located as required by Section R611.7.2.2.2, the location of the vertical reinforcement shall not vary from the center of the wall by more than the greater of 10 percent of the wall thickness and $^3/_8$-inch (10 mm). Horizontal and vertical reinforcement shall be located to provide not less than the minimum cover required by Section R611.5.4.1.

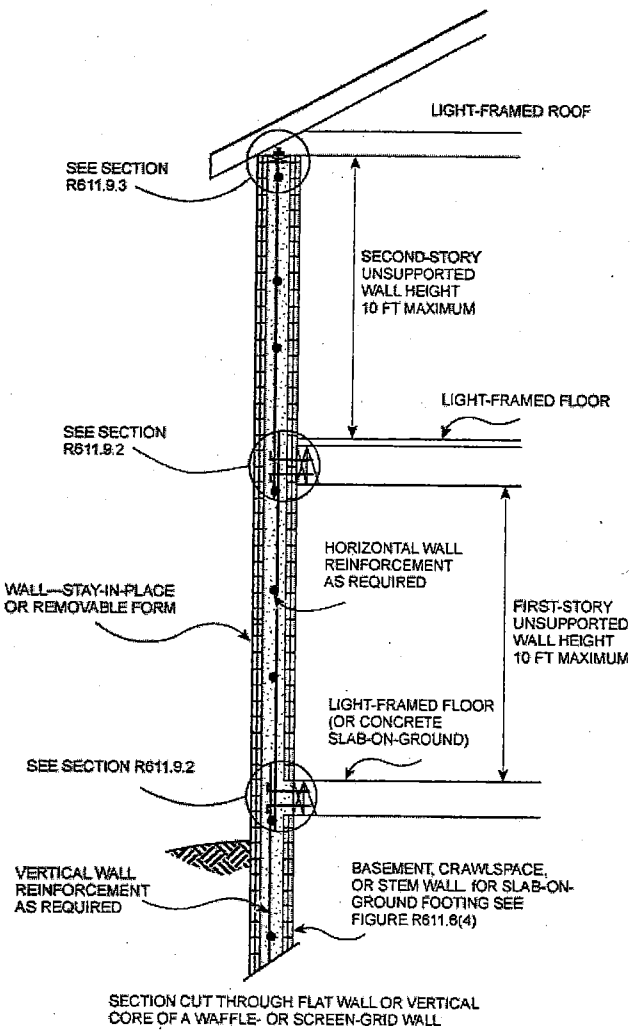

For SI: 1 foot = 304.8 mm.

FIGURE R611.6(3)
ABOVE-GRADE CONCRETE WALL CONSTRUCTION TWO-STORY

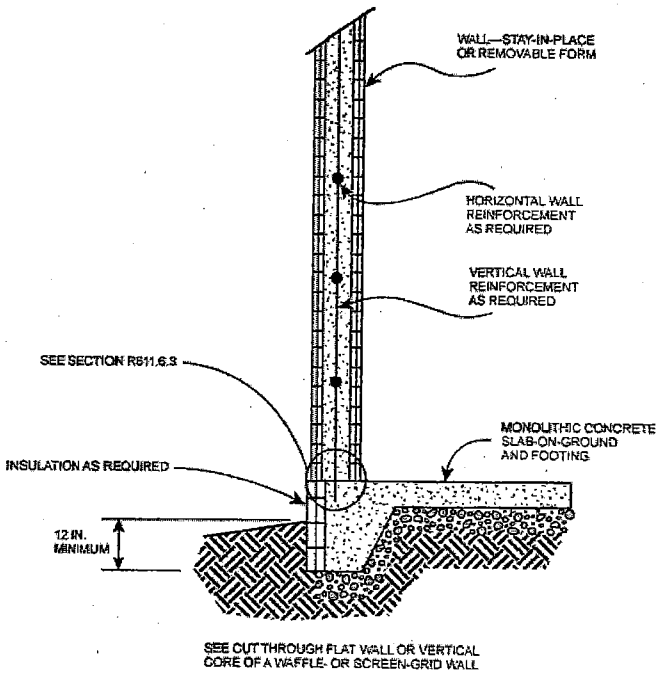

For SI: 1 inch = 25.4 mm.

FIGURE R611.6(4)
ABOVE-GRADE CONCRETE WALL SUPPORTED ON MONOLITHIC SLAB-ON-GROUND FOOTING

TABLE R611.6(1)
MINIMUM VERTICAL REINFORCEMENT FOR FLAT ABOVE-GRADE WALLS[a, b, c, d, e]

MAXIMUM WIND SPEED (mph)			MAXIMUM UNSUPPORTED WALL HEIGHT PER STORY (feet)	MINIMUM VERTICAL REINFORCEMENT-BAR SIZE AND SPACING (inches)[f, g]							
Exposure Category				Nominal[h] wall thickness (inches)							
				4		6		8		10	
B	C	D		Top[i]	Side[i]	Top[i]	Side[i]	Top[i]	Side[i]	Top[i]	Side[i]
85	—	—	8	4@48	4@48	4@48	4@48	4@48	4@48	4@48	4@48
			9	4@48	4@43	4@48	4@48	4@48	4@48	4@48	4@48
			10	4@47	4@36	4@48	4@48	4@48	4@48	4@48	4@48
90	—	—	8	4@48	4@47	4@48	4@48	4@48	4@48	4@48	4@48
			9	4@48	4@39	4@48	4@48	4@48	4@48	4@48	4@48
			10	4@42	4@34	4@48	4@48	4@48	4@48	4@48	4@48
100	85	—	8	4@48	4@40	4@48	4@48	4@48	4@48	4@48	4@48
			9	4@42	4@34	4@48	4@48	4@48	4@48	4@48	4@48
			10	4@34	4@34	4@48	4@48	4@48	4@48	4@48	4@48
110	90	85	8	4@44	4@34	4@48	4@48	4@48	4@48	4@48	4@48
			9	4@34	4@34	4@48	4@48	4@48	4@48	4@48	4@48
			10	4@34	4@31	4@48	4@37	4@48	4@48	4@48	4@48
120	100	90	8	4@36	4@34	4@48	4@48	4@48	4@48	4@48	4@48
			9	4@34	4@32	4@48	4@38	4@48	4@48	4@48	4@48
			10	4@30	4@27	4@48	5@48	4@48	4@48	4@48	4@48
130	110	100	8	4@34	4@34	4@48	4@48	4@48	4@48	4@48	4@48
			9	4@32	4@28	4@48	4@33	4@48	4@48	4@48	4@48
			10	4@26	4@23	4@48	5@43	4@48	4@48	4@48	4@48

For SI: 1 inch = 25.4 mm, 1 foot = 304.8 mm, 1 mile per hour = 0.447 m/s, 1 pound per square inch = 1.895 kPa, 1 square foot = 0.0929 m^2.

a. Table is based on ASCE 7 components and cladding wind pressures for an enclosed building using a mean roof height of 35 feet, interior wall area 4, an effective wind area of 10 square feet, and topographic factor, K_{zt}, and importance factor, I, equal to 1.0.

b. Table is based on concrete with a minimum specified compressive strength of 2,500 psi.

c. See Section R611.6.5 for location of reinforcement in wall.

d. Deflection criterion is $L/240$, where L is the unsupported height of the wall in inches.

e. Interpolation is not permitted.

f. Where No. 4 reinforcing bars at a spacing of 48 inches are specified in the table, use of bars with a minimum yield strength of 40,000 psi or 60,000 psi is permitted.

g. Other than for No. 4 bars spaced at 48 inches on center, table values are based on reinforcing bars with a minimum yield strength of 60,000 psi. Vertical reinforcement with a yield strength of less than 60,000 psi and/or bars of a different size than specified in the table are permitted in accordance with Section R611.5.4.7 and Table R611.5.4(2).

h. See Table R611.3 for tolerances on nominal thicknesses.

i. Top means gravity load from roof and/or floor construction bears on top of wall. Side means gravity load from floor construction is transferred to wall from a wood ledger or cold-formed steel track bolted to side of wall. Where floor framing members span parallel to the wall, use of the top bearing condition is permitted.

TABLE R611.6(2)
MINIMUM VERTICAL REINFORCEMENT FOR WAFFLE-GRID ABOVE-GRADE WALLS[a, b, c, d, e]

MAXIMUM WIND SPEED (mph)			MAXIMUM UNSUPPORTED WALL HEIGHT PER STORY (feet)	MINIMUM VERTICAL REINFORCEMENT-BAR SIZE AND SPACING (inches)[f, g]			
Exposure Category				Nominal[h] wall thickness (inches)			
				6		8	
B	C	D		Top[i]	Side[i]	Top[i]	Side[i]
85	—	—	8	4@48	4@36, 5@48	4@48	4@48
			9	4@48	4@30, 5@47	4@48	4@45
			10	4@48	4@26, 5@40	4@48	4@39
90	—	—	8	4@48	4@33, 5@48	4@48	4@48
			9	4@48	4@28, 5@43	4@48	4@42
			10	4@31, 5@48	4@24, 5@37	4@48	4@36
100	85	—	8	4@48	4@28, 5@44	4@48	4@43
			9	4@31, 5@48	4@24, 5@37	4@48	4@36
			10	4@25, 5@39	4@24, 5@37	4@48	4@31, 5@48
110	90	85	8	4@33, 5@48	4@25, 5@38	4@48	4@38
			9	4@26, 5@40	4@24, 5@37	4@48	4@31, 5@48
			10	4@24, 5@37	4@23, 5@35	4@48	4@27, 5@41
120	100	90	8	4@27, 5@42	4@24, 5@37	4@48	4@33, 5@48
			9	4@24, 5@37	4@23, 5@36	4@48	4@27, 5@43
			10	4@23, 5@35	4@19, 5@30	4@48	4@23, 5@36
130	110	100	8	4@24, 5@37	4@24, 5@37	4@48	4@29, 5@45
			9	4@24, 5@37	4@20, 5@32	4@48	4@24, 5@37
			10	4@19, 5@30	4@17, 5@26	4@23, 5@36	4@20, 5@31

For SI: 1 inch = 25.4 mm, 1 foot = 304.8 mm, 1 mile per hour = 0.447 m/s, 1 pound per square inch = 6.895 kPa, 1 square foot = 0.0929 m^2.

a. Table is based on ASCE 7 components and cladding wind pressures for an enclosed building using a mean roof height of 35 feet, interior wall area 4, an effective wind area of 10 square feet, and topographic factor, K_{zt}, and importance factor, I, equal to 1.0.

b. Table is based on concrete with a minimum specified compressive strength of 2,500 psi.

c. See Section R611.6.5 for location of reinforcement in wall.

d. Deflection criterion is $L/240$, where L is the unsupported height of the wall in inches.

e. Interpolation is not permitted.

f. Where No. 4 reinforcing bars at a spacing of 48 inches are specified in the table, use of bars with a minimum yield strength of 40,000 psi or 60,000 psi is permitted.

g. Other than for No. 4 bars spaced at 48 inches on center, table values are based on reinforcing bars with a minimum yield strength of 60,000 psi. Maximum spacings shown are the values calculated for the specified bar size. Where the bar used is Grade 60 and the size specified in the table, the actual spacing in the wall shall not exceed a whole-number multiple of 12 inches (i.e., 12, 24, 36 and 48) that is less than or equal to the tabulated spacing. Vertical reinforcement with a yield strength of less than 60,000 psi and/or bars of a different size than specified in the table are permitted in accordance with Section R611.5.4.7 and Table R611.5.4(2).

h. See Table R611.3 for minimum core dimensions and maximum spacing of horizontal and vertical cores.

i. Top means gravity load from roof and/or floor construction bears on top of wall. Side means gravity load from floor construction is transferred to wall from a wood ledger or cold-formed steel track bolted to side of wall. Where floor framing members span parallel to the wall, the top bearing condition is permitted to be used.

TABLE R611.6(3)
MINIMUM VERTICAL REINFORCEMENT FOR 6-INCH SCREEN-GRID ABOVE-GRADE WALLS[a, b, c, d, e]

MAXIMUM WIND SPEED (mph)			MAXIMUM UNSUPPORTED WALL HEIGHT PER STORY (feet)	MINIMUM VERTICAL REINFORCEMENT-BAR SIZE AND SPACING (inches)[f, g]	
Exposure Category				Nominal[h] wall thickness (inches)	
				6	
B	C	D		Top[i]	Side[i]
85	—	—	8	4@48	4@34, 5@48
			9	4@48	4@29, 5@45
			10	4@48	4@25, 5@39
90	—	—	8	4@48	4@31, 5@48
			9	4@48	4@27, 5@41
			10	4@30, 5@47	4@23, 5@35
100	85	—	8	4@48	4@27, 5@42
			9	4@30, 5@47	4@23, 5@35
			10	4@24, 5@38	4@22, 5@34
110	90	85	8	4@48	4@24, 5@37
			9	4@25, 5@38	4@22, 5@34
			10	4@22, 5@34	4@22, 5@34
120	100	90	8	4@26, 5@41	4@22, 5@34
			9	4@22, 5@34	4@22, 5@34
			10	4@22, 6@34	4@19, 5@26
130	110	100	8	4@22, 5@35	4@22, 5@34
			9	4@22, 5@34	4@20, 5@30
			10	4@19, 5@29	4@16, 5@25

For SI: 1 inch = 25.4 mm, 1 foot = 304.8 mm, 1 mile per hour = 0.447 m/s, 1 pound per square inch = 6.895 kPa, 1 square foot = 0.0929 m^2.

a. Table is based on ASCE 7 components and cladding wind pressures for an enclosed building using a mean roof height of 35 feet, interior wall area 4, an effective wind area of 10 square feet, and topographic factor, K_{zt}, and importance factor, I, equal to 1.0.

b. Table is based on concrete with a minimum specified compressive strength of 2,500 psi.

c. See Section R611.6.5 for location of reinforcement in wall.

d. Deflection criterion is $L/240$, where L is the unsupported height of the wall in inches.

e. Interpolation is not permitted.

f. Where No. 4 reinforcing bars at a spacing of 48 inches are specified in the table, use of bars with a minimum yield strength of 40,000 psi or 60,000 psi is permitted.

g. Other than for No. 4 bars spaced at 48 inches on center, table values are based on reinforcing bars with a minimum yield strength of 60,000 psi. Maximum spacings shown are the values calculated for the specified bar size. Where the bar used is Grade 60 and the size specified in the table, the actual spacing in the wall shall not exceed a whole-number multiple of 12 inches (i.e., 12, 24, 36 and 48) that is less than or equal to the tabulated spacing. Vertical reinforcement with a yield strength of less than 60,000 psi and/or bars of a different size than specified in the table are permitted in accordance with Section R611.5.4.7 and Table R611.5.4(2).

h. See Table R611.3 for minimum core dimensions and maximum spacing of horizontal and vertical cores.

i. Top means gravity load from roof and/or floor construction bears on top of wall. Side means gravity load from floor construction is transferred to wall from a wood ledger or cold-formed steel track bolted to side of wall. Where floor framing members span parallel to the wall, use of the top bearing condition is permitted.

TABLE R611.6(4)
MINIMUM VERTICAL REINFORCEMENT FOR FLAT, WAFFLE- AND SCREEN-GRID ABOVE-GRADE WALLS DESIGNED CONTINUOUS WITH FOUNDATION STEM WALLS[a, b, c, d, e, k, l]

MAXIMUM WIND SPEED (mph)			HEIGHT OF STEM WALL[h, i] (feet)	MAXIMUM DESIGN LATERAL SOIL LOAD (psf/ft)	MAXIMUM UNSUPPORTED HEIGHT OF ABOVE-GRADE WALL (feet)	MINIMUM VERTICAL REINFORCEMENT-BAR SIZE AND SPACING (inches)[f, g]						
Exposure Category						Wall type and nominal thickness[j] (inches)						
						Flat				Waffle		Screen
B	C	D				4	6	8	10	6	8	6
85	—	—	3	30	8	4@33	4@39	4@48	4@48	4@24	4@28	4@22
					10	4@26	5@48	4@41	4@48	4@19	4@22	4@18
				60	10	4@21	5@40	5@48	4@44	4@16	4@19	4@15
			6	30	10	DR	5@22	6@35	6@43	DR	4@11	DR
				60	10	DR	DR	6@26	6@28	DR	DR	DR
90	—	—	3	30	8	4@30	4@36	4@48	4@48	4@22	4@26	4@21
					10	4@24	5@44	4@38	4@48	4@17	4@21	4@17
				60	10	4@20	5@37	4@48	4@41	4@15	4@18	4@14
			6	30	10	DR	5@21	6@35	6@41	DR	4@10	DR
				60	10	DR	DR	6@26	6@28	DR	DR	DR
100	85	—	3	30	8	4@26	5@48	4@42	4@48	4@19	4@23	4@18
					10	4@20	5@37	4@33	4@41	4@15	4@18	4@14
			6	60	10	4@17	5@34	5@44	4@36	4@13	4@17	4@12
				30	10	DR	5@20	6@35	6@38	DR	4@9	DR
				60	10	DR	DR	6@24	6@28	DR	DR	DR
110	90	85	3	30	8	4@22	5@42	4@37	4@46	4@16	4@20	4@16
					10	4@17	5@34	5@44	4@35	4@12	4@17	4@12
				60	10	4@15	5@34	5@39	5@48	4@11	4@17	4@11
			6	30	10	DR	5@18	6@35	6@35	DR	4@9	DR
				60	10	DR	DR	6@23	6@28	DR	DR	DR
120	100	90	3	30	8	4@19	5@37	5@48	4@40	4@14	4@17	4@14
					10	4@14	5@34	5@38	5@48	4@11	4@17	4@10
				60	10	4@13	5@33	6@48	5@43	4@10	4@16	4@9
			6	30	10	DR	5@16	6@33	6@32	DR	4@8	DR
				60	10	DR	DR	6@22	6@28	DR	DR	DR
130	110	100	3	30	8	4@17	5@34	5@44	4@36	4@12	4@17	4@10
					10	DR	5@32	6@47	5@42	4@9	4@15	DR
				60	10	DR	5@29	6@43	5@39	DR	4@14	DR
			6	30	10	DR	5@15	6@30	6@29	DR	4@7	DR
				60	10	DR	DR	6@21	6@27	DR	DR	DR

For SI: 1 inch = 25.4 mm, 1 foot = 304.8 mm, 1 mile per hour = 0.447 m/s, 1 pound per square inch = 6.895 kPa, 1 square foot = 0.0929 m^2.

a. Table is based on ASCE 7 components and cladding wind pressures for an enclosed building using a mean roof height of 35 feet, interior wall area 4, an effective wind area of 10 square feet, and topographic factor, K_{zt}, and importance factor, I, equal to 1.0.

b. Table is based on concrete with a minimum specified compressive strength of 2,500 psi.

c. See Section R611.6.5 for location of reinforcement in wall.

d. Deflection criterion is $L/240$, where L is the height of the wall in inches from the exterior finish ground level to the top of the above-grade wall.

e. Interpolation is not permitted. For intermediate values of basic wind speed, heights of stem wall and above-grade wall, and design lateral soil load, use next higher value.

f. Where No. 4 reinforcing bars at a spacing of 48 inches are specified in the table, use of bars with a minimum yield strength of 40,000 psi or 60,000 psi is permitted.

g. Other than for No. 4 bars spaced at 48 inches on center, table values are based on reinforcing bars with a minimum yield strength of 60,000 psi. Maximum spacings shown are the values calculated for the specified bar size. In waffle and screen-grid walls where the bar used is Grade 60 and the size specified in the table, the actual spacing in the wall shall not exceed a whole-number multiple of 12 inches (i.e., 12, 24, 36 and 48) that is less than or equal to the tabulated spacing. Vertical reinforcement with a yield strength of less than 60,000 psi and/or bars of a different size than specified in the table are permitted in accordance with Section R611.5.4.7 and Table R611.5.4(2).

h. Height of stem wall is the distance from the exterior finish ground level to the top of the slab-on-ground.

i. Where the distance from the exterior finish ground level to the top of the slab-on-ground is equal to or greater than 4 feet, the stem wall shall be laterally supported at the top and bottom before backfilling. Where the wall is designed and constructed to be continuous with the above-grade wall, temporary supports bracing the top of the stem wall shall remain in place until the above-grade wall is laterally supported at the top by floor or roof construction.

j. See Table R611.3 for tolerances on nominal thicknesses, and minimum core dimensions and maximum spacing of horizontal and vertical cores for waffle- and screen-grid walls.

k. Tabulated values are applicable to construction where gravity loads bear on top of wall, and conditions where gravity loads from floor construction are transferred to wall from a wood ledger or cold-formed steel track bolted to side of wall. See Tables R611.6(1), R611.6(2) and R611.6(3).

l. DR indicates design required.

R611.7 Solid walls for resistance to lateral forces.

R611.7.1 Length of solid wall. Each exterior wall line in each story shall have a total length of solid wall required by Section R611.7.1.1. A solid wall is a section of flat, waffle-grid or screen-grid wall, extending the full story height without openings or penetrations, except those permitted by Section R611.7.2. Solid wall segments that contribute to the total length of solid wall shall comply with Section R611.7.2.

R611.7.1.1 Length of solid wall for wind. All buildings shall have solid walls in each exterior endwall line (the side of a building that is parallel to the span of the roof or floor framing) and sidewall line (the side of a building that is perpendicular to the span of the roof or floor framing) to resist lateral in-plane wind forces. The site-appropriate basic wind speed and exposure category shall be used in Tables R611.7(1A) through (1C) to determine the unreduced total length, *UR*, of solid wall required in each exterior endwall line and sidewall line. For buildings with a mean roof height of less than 35 feet (10 668 mm), the unreduced values determined from Tables R611.7(1A) though (1C) is permitted by multiplying by the applicable factor, R_1, from Table R611.7(2); however, reduced values shall not be less than the minimum values in Tables R611.7(1A) through (1C). Where the floor-to-ceiling height of a *story* is less than 10 feet (3048 mm), the unreduced values determined from Tables R611.7(1A) through (C), including minimum values, is permitted to be reduced by multiplying by the applicable factor, R_2, from Table R611.7(3). To account for different design strengths than assumed in determining the values in Tables R611.7(1A) through (1C), the unreduced lengths determined from Tables R611.7(1A) through (1C), including minimum values, are permitted to be reduced by multiplying by the applicable factor, R_3, from Table R611.7(4). The reductions permitted by Tables R611.7(2), R611.7(3) and R611.7(4) are cumulative.

The total length of solid wall segments, *TL*, in a wall line that comply with the minimum length requirements of Section R611.7.2.1 [see Figure R611.7(1)] shall be equal to or greater than the product of the unreduced length of solid wall from Tables R611.7(1A) through (1C), *UR* and the applicable reduction factors, if any, from Tables R611.7(2), R611.7(3) and R611.7(4) as indicated by Equation R6-1.

$$TL \geq R_1 \cdot R_2 \cdot R_3 \cdot UR \qquad \textbf{(Equation R6-1)}$$

where:

TL = Total length of solid wall segments in a wall line that comply with Section R611.7.2.1 [see Figure R611.7(1)];

R_1 = 1.0 or reduction factor for mean roof height from Table R611.7(2);

R_2 = 1.0 or reduction factor for floor-to-ceiling wall height from Table R611.7(3);

R_3 = 1.0 or reduction factor for design strength from Table R611.7(4), and

UR = Unreduced length of solid wall from Tables R611.7(1A) through (1C).

The total length of solid wall in a wall line, *TL*, shall not be less than that provided by two solid wall segments complying with the minimum length requirements of Section R611.7.2.1.

To facilitate determining the required wall thickness, wall type, number and grade of vertical bars at the each end of each solid wall segment, and whether shear reinforcement is required, use of Equation R6-2 is permitted.

$$R \leq \frac{TL}{R_1 \cdot R_2 \cdot UR} \qquad \textbf{(Equation R6-2)}$$

After determining the maximum permitted value of the reduction factor for design strength, R_3, in accordance with Equation R6-2, select a wall type from Table R611.7(4) with R_3 less than or equal to the value calculated.

R611.7.2 Solid wall segments. Solid wall segments that contribute to the required length of solid wall shall comply with this section. Reinforcement shall be provided in accordance with Section R611.7.2.2 and Table R611.7(4). Solid wall segments shall extend the full story-height without openings, other than openings for the utilities and other building services passing through the wall. In flat walls and waffle-grid walls, such openings shall have an area of less than 30 square inches (19 355 mm^2) with no dimension exceeding $6^1/_4$ inches (159 mm), and shall not be located within 6 inches (152 mm) of the side edges of the solid wall segment. In screen-grid walls, such openings shall be located in the portion of the solid wall segment between horizontal and vertical cores of concrete and opening size and location are not restricted provided no concrete is removed.

R611.7.2.1 Minimum length of solid wall segment and maximum spacing. Only solid wall segments equal to or greater than 24 inches (610 mm) in length shall be included in the total length of solid wall required by Section R611.7.1. In addition, no more than two solid wall segments equal to or greater than 24 inches (610 mm) in length and less than 48 inches (1219 mm) in length shall be included in the required total length of solid wall. The maximum clear opening width shall be 18 feet (5486 mm). See Figure R611.7(1).

R611.7.2.2 Reinforcement in solid wall segments.

R611.7.2.2.1 Horizontal shear reinforcement. Where reduction factors for design strength, R_3, from Table R611.7(4) based on horizontal and vertical shear reinforcement being provided are used, solid wall segments shall have horizontal reinforcement consisting of minimum No. 4 bars. Horizontal shear reinforcement shall be the same grade of steel required for the vertical reinforcement at the ends of solid wall segments by Section R611.7.2.2.2.

The spacing of horizontal reinforcement shall not exceed the smaller of one-half the length of the solid wall segment, minus 2 inches (51 mm), and 18 inches (457 mm). Horizontal shear reinforcement shall terminate in accordance with Section R611.6.4.

R611.7.2.2.2 Vertical reinforcement. Vertical reinforcement applicable to the reduction factor(s) for design strength, R_3, from Table R611.7(4) that is used, shall be located at each end of each solid wall segment in accordance with the applicable detail in Figure R611.7(2). The No. 4 vertical bar required on each side of an opening by Section R611.8.1.2 is permitted to be used as reinforcement at the ends of solid wall segments where installed in accordance with the applicable detail in Figure R611.7(2). There shall be not less than two No. 4 bars at each end of solid wall segments located as required by the applicable detail in Figure R611.7(2). One of the bars at each end of solid wall segments shall be deemed to meet the requirements for vertical wall reinforcement required by Section R611.6.

The vertical wall reinforcement at each end of each solid wall segment shall be developed below the bottom of the adjacent wall opening [see Figure R611.7(3)] by one of the following methods:

1. Where the wall height below the bottom of the adjacent opening is equal to or greater than 22 inches (559 mm) for No. 4 or 28 inches (711 mm) for No. 5 vertical wall reinforcement, reinforcement around openings in accordance with Section R611.8.1 shall be sufficient, or
2. Where the wall height below the bottom of the adjacent opening is less than required by Item 1 above, the vertical wall reinforcement adjacent to the opening shall extend into the footing far enough to develop the bar in tension in accordance with Section R611.5.4.4 and Figure R611.5.4(2), or shall be lap-spliced with a dowel that is embedded in the footing far enough to develop the dowel-bar in tension.

TABLE R611.7(1A)
UNREDUCED LENGTH, *UR*, OF SOLID WALL REQUIRED IN EACH EXTERIOR ENDWALL FOR WIND PERPENDICULAR TO RIDGE ONE STORY OR TOP STORY OF TWO STORY[a, c, d, e, f, g]

SIDEWALL LENGTH (feet)	ENDWALL LENGTH (feet)	ROOF SLOPE	UNREDUCED LENGTH, *UR*, OF SOLID WALL REQUIRED IN ENDWALLS FOR WIND PERPENDICULAR TO RIDGE (feet)						
			Basic Wind Speed (mph) Exposure						
			85B	90B	100B	110B	120B	130B	Minimum[b]
					85C	90C	100C	110C	
						85D	90D	100D	
15	15	< 1:12	0.90	1.01	1.25	1.51	1.80	2.11	0.98
		5:12	1.25	1.40	1.73	2.09	2.49	2.92	1.43
		7:12	1.75	1.96	2.43	2.93	3.49	4.10	1.64
		12:12	2.80	3.13	3.87	4.68	5.57	6.54	2.21
	30	< 1:12	0.90	1.01	1.25	1.51	1.80	2.11	1.09
		5:12	1.25	1.40	1.73	2.09	2.49	2.92	2.01
		7:12	2.43	2.73	3.37	4.08	4.85	5.69	2.42
		12:12	4.52	5.07	6.27	7.57	9.01	10.58	3.57
	45	< 1:12	0.90	1.01	1.25	1.51	1.80	2.11	1.21
		5:12	1.25	1.40	1.73	2.09	2.49	2.92	2.59
		7:12	3.12	3.49	4.32	5.22	6.21	7.29	3.21
		12:12	6.25	7.00	8.66	10.47	12.45	14.61	4.93
	60	< 1:12	0.90	1.01	1.25	1.51	1.80	2.11	1.33
		5:12	1.25	1.40	1.73	2.09	2.49	2.92	3.16
		7:12	3.80	4.26	5.26	6.36	7.57	8.89	3.99
		12:12	7.97	8.94	11.05	13.36	15.89	18.65	6.29

(continued)

TABLE R611.7(1A)—continued
UNREDUCED LENGTH, UR, OF SOLID WALL REQUIRED IN EACH EXTERIOR ENDWALL FOR WIND PERPENDICULAR TO RIDGE ONE STORY OR TOP STORY OF TWO STORY[a, c, d, e, f, g]

SIDEWALL LENGTH (feet)	ENDWALL LENGTH (feet)	ROOF SLOPE	UNREDUCED LENGTH, UR, OF SOLID WALL REQUIRED IN ENDWALLS FOR WIND PERPENDICULAR TO RIDGE (feet)						
			Basic Wind Speed (mph) Exposure						
			85B	90B	100B 85C	110B 90C 85D	120B 100C 90D	130B 110C 100D	Minimum[b]
30	15	< 1:12	1.61	1.80	2.23	2.70	3.21	3.77	1.93
		5:12	2.24	2.51	3.10	3.74	4.45	5.23	2.75
		7:12	3.15	3.53	4.37	5.28	6.28	7.37	3.12
		12:12	4.90	5.49	6.79	8.21	9.77	11.46	4.14
	30	< 1:12	1.61	1.80	2.23	2.70	3.21	3.77	2.14
		5:12	2.24	2.51	3.10	3.74	4.45	5.23	3.78
		7:12	4.30	4.82	5.96	7.20	8.57	10.05	4.52
		12:12	7.79	8.74	10.80	13.06	15.53	18.23	6.57
	45	< 1:12	1.61	1.80	2.23	2.70	3.21	3.77	2.35
		5:12	2.24	2.51	3.10	3.74	4.45	5.23	4.81
		7:12	5.44	6.10	7.54	9.12	10.85	12.73	5.92
		12:12	10.69	11.98	14.81	17.90	21.30	25.00	9.00
	60	< 1:12	1.61	1.80	2.23	2.70	3.21	3.77	2.56
		5:12	2.24	2.51	3.10	3.74	4.45	5.23	5.84
		7:12	6.59	7.39	9.13	11.04	13.14	15.41	7.32
		12:12	13.58	15.22	18.82	22.75	27.07	31.77	11.43
60	15	< 1:12	2.99	3.35	4.14	5.00	5.95	6.98	3.83
		5:12	4.15	4.65	5.75	6.95	8.27	9.70	5.37
		7:12	5.91	6.63	8.19	9.90	11.78	13.83	6.07
		12:12	9.05	10.14	12.54	15.16	18.03	21.16	8.00
	30	< 1:12	2.99	3.35	4.14	5.00	5.95	6.98	4.23
		5:12	4.15	4.65	5.75	6.95	8.27	9.70	7.31
		7:12	7.97	8.94	11.05	13.36	15.89	18.65	8.71
		12:12	14.25	15.97	19.74	23.86	28.40	33.32	12.57
	45	< 1:12	3.11	3.48	4.30	5.20	6.19	7.26	4.63
		5:12	4.31	4.84	5.98	7.23	8.60	10.09	9.25
		7:12	10.24	11.47	14.19	17.15	20.40	23.84	11.35
		12:12	19.84	22.24	27.49	33.23	39.54	46.40	17.14
	60	< 1:12	3.22	3.61	4.46	5.39	6.42	7.53	5.03
		5:12	4.47	5.01	6.19	7.49	8.91	10.46	11.19
		7:12	12.57	14.09	17.42	21.05	25.05	29.39	13.99
		12:12	25.61	28.70	35.49	42.90	51.04	59.90	21.71

For SI: 1 inch = 25.4 mm, 1 foot = 304.8 mm, 1 mile per hour = 0.447 m/s, 1 pound-force per linear foot = 0.146 kN/m, 1 pound per square foot = 47.88 Pa.

a. Tabulated lengths were derived by calculating design wind pressures in accordance with Figure 6-10 of ASCE 7 for a building with a mean roof height of 35 feet. For wind perpendicular to the ridge, the effects of a 2-foot overhang on each endwall are included. The design pressures were used to calculate forces to be resisted by solid wall segments in each endwall [Table R611.7(1A) or R611.7(1B) or sidewall (Table R611.7(1C)], as appropriate. The forces to be resisted by each wall line were then divided by the default design strength of 840 pounds per linear foot of length to determine the required solid wall length. The actual mean roof height of the building shall not exceed the least horizontal dimension of the building.

b. Tabulated lengths in the "minimum" column are based on the requirement of Section 6.1.4.1 of ASCE 7 that the main windforce-resisting system be designed for a minimum service level force of 10 psf multiplied by the area of the building projected onto a vertical plane normal to the assumed wind direction. Tabulated lengths in shaded cells are less than the "minimum" value. Where the minimum controls, it is permitted to be reduced in accordance with Notes c, d and e. See Section R611.7.1.1.

c. For buildings with a mean roof height of less than 35 feet, tabulated lengths are permitted to be reduced by multiplying by the appropriate factor, R_1, from Table R611.7(2). The reduced length shall not be less than the "minimum" value shown in the table.

d. Tabulated lengths for "one story or top story of two story" are based on a floor-to-ceiling height of 10 feet. Tabulated lengths for "first story of two story" are based on floor-to-ceiling heights of 10 feet each for the first and second story. For floor-to-ceiling heights less than assumed, use the lengths in Table R611.7(1A), (1B) or (1C), or multiply the value in the table by the reduction factor, R_2, from Table R611.7(3).

e. Tabulated lengths are based on the default design shear strength of 840 pounds per linear foot of solid wall segment. The tabulated lengths are permitted to be reduced by multiplying by the applicable reduction factor for design strength, R_3, from Table R611.7(4).

f. The reduction factors, R_1, R_2 and R_3, in Tables R611.7(2), R611.7(3), and R611.7(4), respectively, are permitted to be compounded, subject to the limitations of Note b. However, the minimum number and minimum length of solid walls segments in each wall line shall comply with Sections R611.7.1 and R611.7.2.1, respectively.

g. For intermediate values of sidewall length, endwall length, roof slope and basic wind speed, use the next higher value, or determine by interpolation.

TABLE R611.7(1B)
UNREDUCED LENGTH, *UR*, OF SOLID WALL REQUIRED IN EACH EXTERIOR ENDWALL FOR WIND PERPENDICULAR TO RIDGE FIRST STORY OF TWO STORY[a, c, d, e, f, g]

SIDEWALL LENGTH (feet)	ENDWALL LENGTH (feet)	ROOF SLOPE	UNREDUCED LENGTH, *UR*, OF SOLID WALL REQUIRED IN ENDWALLS FOR WIND PERPENDICULAR TO RIDGE (feet)						
			Basic Wind Speed (mph) Exposure						
			85B	90B	100B	110B	120B	130B	Minimum[b]
					85C	90C	100C	110C	
						85D	90D	100D	
			Velocity pressure (psf)						
			11.51	12.90	15.95	19.28	22.94	26.92	
15	15	< 1:12	2.60	2.92	3.61	4.36	5.19	6.09	2.59
		5:12	3.61	4.05	5.00	6.05	7.20	8.45	3.05
		7:12	3.77	4.23	5.23	6.32	7.52	8.82	3.26
		12:12	4.81	5.40	6.67	8.06	9.60	11.26	3.83
	30	< 1:12	2.60	2.92	3.61	4.36	5.19	6.09	2.71
		5:12	3.61	4.05	5.00	6.05	7.20	8.45	3.63
		7:12	4.45	4.99	6.17	7.46	8.88	10.42	4.04
		12:12	6.54	7.33	9.06	10.96	13.04	15.30	5.19
	45	< 1:12	2.60	2.92	3.61	4.36	5.19	6.09	2.83
		5:12	3.61	4.05	5.00	6.05	7.20	8.45	4.20
		7:12	5.14	5.76	7.12	8.60	10.24	12.01	4.83
		12:12	8.27	9.27	11.46	13.85	16.48	19.34	6.55
	60	< 1:12	2.60	2.92	3.61	4.36	5.19	6.09	2.95
		5:12	3.61	4.05	5.00	6.05	7.20	8.45	4.78
		7:12	5.82	6.52	8.06	9.75	11.60	13.61	5.61
		12:12	9.99	11.20	13.85	16.74	19.92	23.37	7.90
30	15	< 1:12	4.65	5.21	6.45	7.79	9.27	10.88	5.16
		5:12	6.46	7.24	8.95	10.82	12.87	15.10	5.98
		7:12	6.94	7.78	9.62	11.62	13.83	16.23	6.35
		12:12	8.69	9.74	12.04	14.55	17.32	20.32	7.38
	30	< 1:12	4.65	5.21	6.45	7.79	9.27	10.88	5.38
		5:12	6.46	7.24	8.95	10.82	12.87	15.10	7.01
		7:12	8.09	9.06	11.21	13.54	16.12	18.91	7.76
		12:12	11.58	12.98	16.05	19.40	23.08	27.09	9.81
	45	< 1:12	4.65	5.21	6.45	7.79	9.27	10.88	5.59
		5:12	6.46	7.24	8.95	10.82	12.87	15.10	8.04
		7:12	9.23	10.35	12.79	15.46	18.40	21.59	9.16
		12:12	14.48	16.22	20.06	24.25	28.85	33.86	12.24
	60	< 1:12	4.65	5.21	6.45	7.79	9.27	10.88	5.80
		5:12	6.46	7.24	8.95	10.82	12.87	15.10	9.08
		7:12	10.38	11.63	14.38	17.38	20.69	24.27	10.56
		12:12	17.37	19.47	24.07	29.10	34.62	40.63	14.67

(continued)

TABLE R611.7(1B)—continued
UNREDUCED LENGTH, *UR*, OF SOLID WALL REQUIRED IN EACH EXTERIOR ENDWALL FOR WIND PERPENDICULAR TO RIDGE FIRST STORY OF TWO STORY[a, c, d, e, f, g]

SIDEWALL LENGTH (feet)	ENDWALL LENGTH (feet)	ROOF SLOPE	UNREDUCED LENGTH, *UR*, OF SOLID WALL REQUIRED IN ENDWALLS FOR WIND PERPENDICULAR TO RIDGE (feet)						
			Basic Wind Speed (mph) Exposure						
			85B	90B	100B	110B	120B	130B	Minimum[b]
					85C	90C	100C	110C	
						85D	90D	100D	
			Velocity pressure (psf)						
			11.51	12.90	15.95	19.28	22.94	26.92	
60	15	< 1:12	8.62	9.67	11.95	14.45	17.19	20.17	10.30
		5:12	11.98	13.43	16.61	20.07	23.88	28.03	11.85
		7:12	13.18	14.78	18.27	22.08	26.28	30.83	12.54
		12:12	16.32	18.29	22.62	27.34	32.53	38.17	14.48
	30	< 1:12	8.62	9.67	11.95	14.45	17.19	20.17	10.70
		5:12	11.98	13.43	16.61	20.07	23.88	28.03	13.79
		7:12	15.25	17.09	21.13	25.54	30.38	35.66	15.18
		12:12	21.52	24.12	29.82	36.05	42.89	50.33	19.05
	45	< 1:12	8.97	10.06	12.43	15.03	17.88	20.99	11.10
		5:12	12.46	13.97	17.27	20.88	24.84	29.15	15.73
		7:12	17.67	19.80	24.48	29.59	35.21	41.32	17.82
		12:12	27.27	30.56	37.79	45.68	54.35	63.78	23.62
	60	< 1:12	9.30	10.43	12.89	15.58	18.54	21.76	11.50
		5:12	12.91	14.47	17.90	21.63	25.74	30.20	17.67
		7:12	20.14	22.58	27.91	33.74	40.15	47.11	20.46
		12:12	33.19	37.19	45.99	55.59	66.14	77.62	28.19

For SI: 1 inch = 25.4 mm, 1 foot = 304.8 mm, 1 mile per hour = 0.447 m/s, 1 pound force per linear foot = 0.146 kN/m, 1 pound per square foot = 47.88 Pa.

a. Tabulated lengths were derived by calculating design wind pressures in accordance with Figure 6-10 of ASCE 7 for a building with a mean roof height of 35 feet. For wind perpendicular to the ridge, the effects of a 2-foot overhang on each endwall are included. The design pressures were used to calculate forces to be resisted by solid wall segments in each endwall [Table R611.7(1A) or R611.7(1B)] or sidewall [Table R611.7(1C)], as appropriate. The forces to be resisted by each wall line were then divided by the default design strength of 840 pounds per linear foot of length to determine the required solid wall length. The actual mean roof height of the building shall not exceed the least horizontal dimension of the building.

b. Tabulated lengths in the "minimum" column are based on the requirement of Section 6.1.4.1 of ASCE 7 that the main windforce-resisting system be designed for a minimum service level force of 10 psf multiplied by the area of the building projected onto a vertical plane normal to the assumed wind direction. Tabulated lengths in shaded cells are less than the "minimum" value. Where the minimum controls, it is permitted to be reduced in accordance with Notes c, d and e. See Section R611.7.1.1.

c. For buildings with a mean roof height of less than 35 feet, tabulated lengths are permitted to be reduced by multiplying by the appropriate factor, R_1, from Table R611.7(2). The reduced length shall not be less than the "minimum" value shown in the table.

d. Tabulated lengths for "one story or top story of two story" are based on a floor-to-ceiling height of 10 feet. Tabulated lengths for "first story of two story" are based on floor-to-ceiling heights of 10 feet each for the first and second story. For floor-to-ceiling heights less than assumed, use the lengths in Table R611.7(1A), (1B) or (1C), or multiply the value in the table by the reduction factor, R_2, from Table R611.7(3).

e. Tabulated lengths are based on the default design shear strength of 840 pounds per linear foot of solid wall segment. The tabulated lengths are permitted to be reduced by multiplying by the applicable reduction factor for design strength, R_3, from Table R611.7(4).

f. The reduction factors, R_1, R_2 and R_3, in Tables R611.7(2), R611.7(3), and R611.7(4), respectively, are permitted to be compounded, subject to the limitations of Note b. However, the minimum number and minimum length of solid walls segments in each wall line shall comply with Sections R611.7.1 and R611.7.2.1, respectively.

g. For intermediate values of sidewall length, endwall length, roof slope and basic wind speed, use the next higher value, or determine by interpolation.

TABLE R611.7(1C)
UNREDUCED LENGTH, *UR*, OF SOLID WALL REQUIRED IN EACH EXTERIOR SIDEWALL FOR WIND PARALLEL TO RIDGE[a, c, d, e, f, g]

SIDEWALL LENGTH (feet)	ENDWALL LENGTH (feet)	ROOF SLOPE	UNREDUCED LENGTH, *UR*, OF SOLID WALL REQUIRED IN SIDEWALLS FOR WIND PARALLEL TO RIDGE (feet)						
			Basic Wind Speed (mph) Exposure						
			85B	90B	100B 85C	110B 90C 85D	120B 100C 90D	130B 110C 100D	Minimum[b]
			One story or top story of two story						
< 30	15	< 1:12	0.95	1.06	1.31	1.59	1.89	2.22	0.90
		5:12	1.13	1.26	1.56	1.88	2.24	2.63	1.08
		7:12	1.21	1.35	1.67	2.02	2.40	2.82	1.17
		12:12	1.43	1.60	1.98	2.39	2.85	3.34	1.39
	30	< 1:12	1.77	1.98	2.45	2.96	3.53	4.14	1.90
		5:12	2.38	2.67	3.30	3.99	4.75	5.57	2.62
		7:12	2.66	2.98	3.69	4.46	5.31	6.23	2.95
		12:12	3.43	3.85	4.76	5.75	6.84	8.03	3.86
	45	< 1:12	2.65	2.97	3.67	4.43	5.27	6.19	2.99
		5:12	3.58	4.46	5.51	6.66	7.93	9.31	4.62
		7:12	4.15	5.14	6.35	7.68	9.14	10.72	5.36
		12:12	6.25	7.01	8.67	10.48	12.47	14.63	7.39
	60	< 1:12	3.59	4.03	4.98	6.02	7.16	8.40	4.18
		5:12	5.04	6.65	8.22	9.93	11.82	13.87	7.07
		7:12	6.09	7.63	9.69	11.71	13.93	16.35	8.38
		12:12	9.92	11.12	13.75	16.62	19.77	23.21	12.00
60	45	< 1:12	2.77	3.11	3.84	4.65	5.53	6.49	2.99
		5:12	4.15	4.66	5.76	6.96	8.28	9.72	4.62
		7:12	4.78	5.36	6.63	8.01	9.53	11.18	5.36
		12:12	6.51	7.30	9.03	10.91	12.98	15.23	7.39
	60	< 1:12	3.86	4.32	5.35	6.46	7.69	9.02	4.18
		5:12	6.31	7.08	8.75	10.57	12.58	14.76	7.07
		7:12	7.25	8.12	10.29	12.44	14.80	17.37	8.38
		12:12	10.51	11.78	14.56	17.60	20.94	24.57	12.00

(continued)

TABLE R611.7(1C)—continued
UNREDUCED LENGTH, *UR*, OF SOLID WALL REQUIRED IN EACH EXTERIOR SIDEWALL FOR WIND PARALLEL TO RIDGE[a, c, d, e, f, g]

SIDEWALL LENGTH (feet)	ENDWALL LENGTH (feet)	ROOF SLOPE	UNREDUCED LENGTH, *UR*, OF SOLID WALL REQUIRED IN SIDEWALLS FOR WIND PARALLEL TO RIDGE (feet)						
			Basic Wind Speed (mph) Exposure						
			85B	90B	100B 85C	110B 90C 85D	120B 100C 90D	130B 110C 100D	Minimum[b]
			First story of two story						
< 30	15	< 1:12	2.65	2.97	3.67	4.44	5.28	6.20	2.52
		5:12	2.83	3.17	3.92	4.74	5.64	6.62	2.70
		7:12	2.91	3.26	4.03	4.87	5.80	6.80	2.79
		12:12	3.13	3.51	4.34	5.25	6.24	7.32	3.01
	30	< 1:12	4.81	5.39	6.67	8.06	9.59	11.25	5.14
		5:12	5.42	6.08	7.52	9.09	10.81	12.69	5.86
		7:12	5.70	6.39	7.90	9.55	11.37	13.34	6.19
		12:12	6.47	7.25	8.97	10.84	12.90	15.14	7.10
	45	< 1:12	6.99	7.83	9.69	11.71	13.93	16.35	7.85
		5:12	8.32	9.33	11.53	13.94	16.59	19.47	9.48
		7:12	8.93	10.01	12.37	14.95	17.79	20.88	10.21
		12:12	10.60	11.88	14.69	17.75	21.13	24.79	12.25
	60	< 1:12	9.23	10.35	12.79	15.46	18.40	21.59	10.65
		5:12	11.57	12.97	16.03	19.38	23.06	27.06	13.54
		7:12	12.63	14.15	17.50	21.15	25.17	29.54	14.85
		12:12	15.56	17.44	21.56	26.06	31.01	36.39	18.48
60	45	< 1:12	7.34	8.22	10.17	12.29	14.62	17.16	7.85
		5:12	8.72	9.77	12.08	14.60	17.37	20.39	9.48
		7:12	9.34	10.47	12.95	15.65	18.62	21.85	10.21
		12:12	11.08	12.41	15.35	18.55	22.07	25.90	12.25
	60	< 1:12	9.94	11.14	13.77	16.65	19.81	23.25	10.65
		5:12	12.40	13.89	17.18	20.76	24.70	28.99	13.54
		7:12	13.51	15.14	18.72	22.63	26.92	31.60	14.85
		12:12	16.59	18.59	22.99	27.79	33.06	38.80	18.48

For SI: 1 inch = 25.4 mm, 1 foot = 304.8 mm, 1 mile per hour = 0.447 m/s, 1 pound force per linear foot = 0.146 kN/m, 1 pound per square foot = 47.88 Pa.

a. Tabulated lengths were derived by calculating design wind pressures in accordance with Figure 6-10 of ASCE 7 for a building with a mean roof height of 35 feet. For wind perpendicular to the ridge, the effects of a 2-foot overhang on each endwall are included. The design pressures were used to calculate forces to be resisted by solid wall segments in each endwall [Table R611.7(1A) or R611.7(1B)] or sidewall [(Table R611.7(1C)], as appropriate. The forces to be resisted by each wall line were then divided by the default design strength of 840 pounds per linear foot of length to determine the required solid wall length. The actual mean roof height of the building shall not exceed the least horizontal dimension of the building.

b. Tabulated lengths in the "minimum" column are based on the requirement of Section 6.1.4.1 of ASCE 7 that the main windforce-resisting system be designed for a minimum service level force of 10 psf multiplied by the area of the building projected onto a vertical plane normal to the assumed wind direction. Tabulated lengths in shaded cells are less than the "minimum" value. Where the minimum controls, it is permitted to be reduced in accordance with Notes c, d and e. See Section R611.7.1.1.

c. For buildings with a mean roof height of less than 35 feet, tabulated lengths are permitted to be reduced by multiplying by the appropriate factor, R_1, from Table R611.7(2). The reduced length shall not be less than the "minimum" value shown in the table.

d. Tabulated lengths for "one story or top story of two story" are based on a floor-to-ceiling height of 10 feet. Tabulated lengths for "first story of two story" are based on floor-to-ceiling heights of 10 feet each for the first and second story. For floor-to-ceiling heights less than assumed, use the lengths in Table R611.7(1A), (1B) or (1C), or multiply the value in the table by the reduction factor, R_2, from Table R611.7(3).

e. Tabulated lengths are based on the default design shear strength of 840 pounds per linear foot of solid wall segment. The tabulated lengths are permitted to be reduced by multiplying by the applicable reduction factor for design strength, R_3, from Table R611.7(4).

f. The reduction factors, R_1, R_2 and R_3, in Tables R611.7(2), R611.7(3), and R611.7(4), respectively, are permitted to be compounded, subject to the limitations of Note b. However, the minimum number and minimum length of solid walls segments in each wall line shall comply with Sections R611.7.1 and R611.7.2.1, respectively.

g. For intermediate values of sidewall length, endwall length, roof slope and basic wind speed, use the next higher value, or determine by interpolation.

TABLE R611.7(2)
REDUCTION FACTOR, R_1, FOR BUILDINGS WITH MEAN ROOF HEIGHT LESS THAN 35 FEET[a]

MEAN ROOF HEIGHT[b, c] (feet)	REDUCTION FACTOR R_1, FOR MEAN ROOF HEIGHT		
	Exposure category		
	B	C	D
< 15	0.96	0.84	0.87
20	0.96	0.89	0.91
25	0.96	0.93	0.94
30	0.96	0.97	0.98
35	1.00	1.00	1.00

For SI: 1 foot = 304.8 mm, 1 degree = 0.0175 rad.

a. See Section R611.7.1.1 and Note c to Table R611.7(1A) for application of reduction factors in this table. This reduction is not permitted for "minimum" values.

b. For intermediate values of mean roof height, use the factor for the next greater height, or determine by interpolation.

c. Mean roof height is the average of the roof eave height and height of the highest point on the roof surface, except that for roof slopes of less than or equal to $2^1/_8$:12 (10 degrees), the mean roof height is permitted to be taken as the roof eave height.

TABLE R611.7(3)
REDUCTION FACTOR, R_2, FOR FLOOR-TO-CEILING WALL HEIGHTS LESS THAN 10 FEET[a, b]

STORY UNDER CONSIDERATION	FLOOR-TO-CEILING HEIGHT[c] (feet)	ENDWALL LENGTH (feet)	ROOF SLOPE	REDUCTION FACTOR, R_2
Endwalls—for wind perpendicular to ridge				
One story or top story of two story	8	15	< 5:12	0.83
			7:12	0.90
			12:12	0.94
		60	< 5:12	0.83
			7:12	0.95
			12:12	0.98
First story of two story	16 combined first and second story	15	< 5:12	0.83
			7:12	0.86
			12:12	0.89
		60	< 5:12	0.83
			7:12	0.91
			12:12	0.95
Sidewalls—for wind parallel to ridge				
One story or top story of two story	8	15	< 1:12	0.84
			5:12	0.87
			7:12	0.88
			12:12	0.89
		60	< 1:12	0.86
			5:12	0.92
			7:12	0.93
			12:12	0.95
First story of two story	16 combined first and second story	15	< 1:12	0.83
			5:12	0.84
			7:12	0.85
			12:12	0.86
		60	< 1:12	0.84
			5:12	0.87
			7:12	0.88
			12:12	0.90

For SI: 1 foot = 304.8 mm.

a. See Section R611.7.1.1 and Note d to Table R611.7(1A) for application of reduction factors in this table.

b. For intermediate values of endwall length, and/or roof slope, use the next higher value, or determine by interpolation.

c. Tabulated values in Table R611.7(1A) and (1C) for "one story or top story of two story" are based on a floor-to-ceiling height of 10 feet. Tabulated values in Table R611.7(1B) and (1C) for "first story of two story" are based on floor-to-ceiling heights of 10 feet each for the first and second story. For floor to ceiling heights between those shown in this table and those assumed in Table R611.7(1A), (1B) or (1C), use the solid wall lengths in Table R611.7(1A), (1B) or (1C), or determine the reduction factor by interpolating between 1.0 and the factor shown in this table.

TABLE R611.7(4)
REDUCTION FACTOR FOR DESIGN STRENGTH, R_3, FOR FLAT, WAFFLE- AND SCREEN-GRID WALLS[a, c]

NOMINAL THICKNESS OF WALL (inches)	VERTICAL BARS AT EACH END OF SOLID WALL SEGMENT		VERTICAL REINFORCEMENT LAYOUT DETAIL [see Figure R611.7(2)]	REDUCTION FACTOR, R_3, FOR LENGTH OF SOLID WALL			
				Horizontal and vertical shear reinforcement provided			
				No		Yes[d]	
	Number of bars	Bar size		40,000[b]	60,000[b]	40,000[b]	60,000[b]
Flat walls							
4	2	4	1	0.74	0.61	0.74	0.50
	3	4	2	0.61	0.61	0.52	0.27
	2	5	1	0.61	0.61	0.48	0.25
	3	5	2	0.61	0.61	0.26	0.18
6	2	4	3	0.70	0.48	0.70	0.48
	3	4	4	0.49	0.38	0.49	0.33
	2	5	3	0.46	0.38	0.46	0.31
	3	5	4	0.38	0.38	0.32	0.16
8	2	4	3	0.70	0.47	0.70	0.47
	3	4	5	0.47	0.32	0.47	0.32
	2	5	3	0.45	0.31	0.45	0.31
	4	4	6	0.36	0.28	0.36	0.25
	3	5	5	0.31	0.28	0.31	0.16
	4	5	6	0.28	0.28	0.24	0.12
10	2	4	3	0.70	0.47	0.70	0.47
	2	5	3	0.45	0.30	0.45	0.30
	4	4	7	0.36	0.25	0.36	0.25
	6	4	8	0.25	0.22	0.25	0.13
	4	5	7	0.24	0.22	0.24	0.12
	6	5	8	0.22	0.22	0.12	0.08
Waffle-grid walls[e]							
6	2	4	3	0.78	0.78	0.70	0.48
	3	4	4	0.78	0.78	0.49	0.25
	2	5	3	0.78	0.78	0.46	0.23
	3	5	4	0.78	0.78	0.24	0.16
8	2	4	3	0.78	0.78	0.70	0.47
	3	4	5	0.78	0.78	0.47	0.24
	2	5	3	0.78	0.78	0.45	0.23
	4	4	6	0.78	0.78	0.36	0.18
	3	5	5	0.78	0.78	0.23	0.16
	4	5	6	0.78	0.78	0.18	0.13
Screen-grid walls[e]							
6	2	4	3	0.93	0.93	0.70	0.48
	3	4	4	0.93	0.93	0.49	0.25
	2	5	3	0.93	0.93	0.46	0.23
	3	5	4	0.93	0.93	0.24	0.16

For SI: 1 inch = 25.4 mm, 1,000 pounds per square inch = 6.895 MPa.

a. See Note e to Table R611.7(1A) for application of adjustment factors in this table.

b. Yield strength in pounds per square inch of vertical wall reinforcement at ends of solid wall segments.

c. Values are based on concrete with a specified compressive strength, f'_c, of 2,500 psi. Where concrete with f'_c of not less than 3,000 psi is used, values in shaded cells are permitted to be decreased by multiplying by 0.91.

d. Horizontal and vertical shear reinforcement shall be provided in accordance with Section R611.7.2.2.

e. Each end of each solid wall segment shall have rectangular flanges. In the through-the-wall dimension, the flange shall not be less than $5^1/_2$ inches for 6-inch-nominal waffle- and screen-grid walls, and not less than $7^1/_2$ inches for 8-inch-nominal waffle-grid walls. In the in-plane dimension, flanges shall be long enough to accommodate the vertical reinforcement required by the layout detail selected from Figure R611.7(2) and provide the cover required by Section R611.5.4.1. If necessary to achieve the required dimensions, form material shall be removed or use of flat wall forms is permitted.

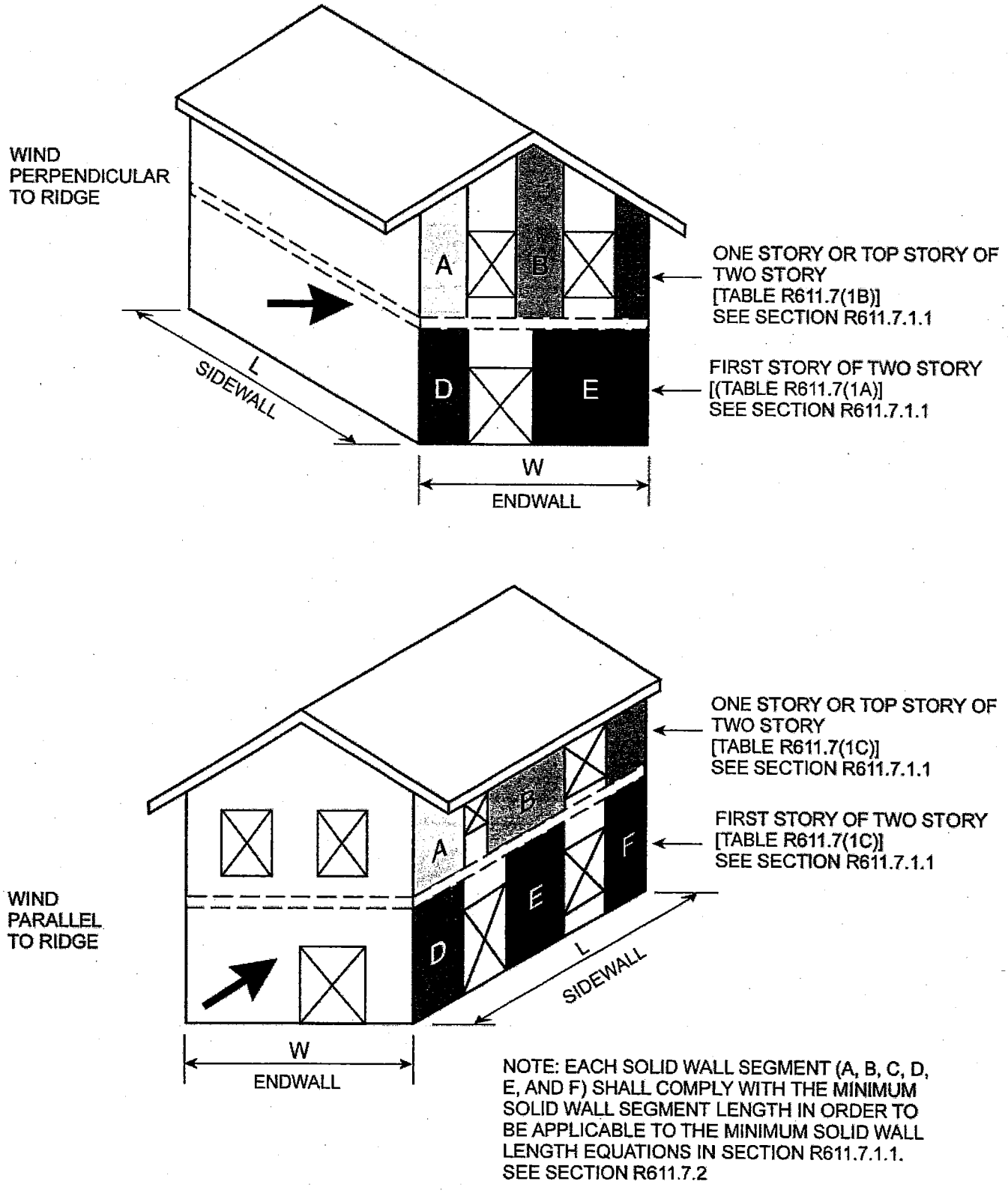

FIGURE R611.7(1)
MINIMUM SOLID WALL LENGTH

DETAIL NO.	NOM. WALL THICKNESS, IN.	REINFORCEMENT LAYOUT AT ENDS OF SOLID WALL SEGMENTS
1	4	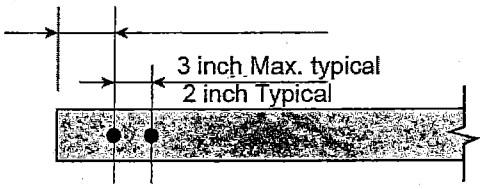
2	4	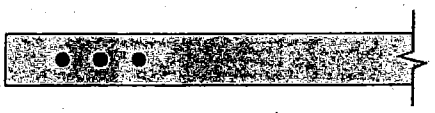
3	6 8 10	
4	6	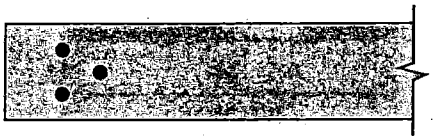
5	8	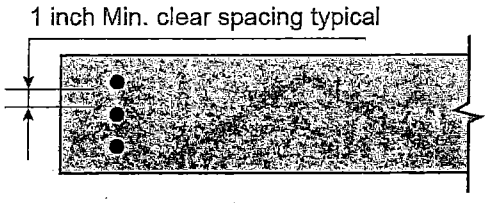
6	8	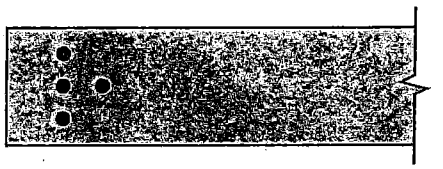
7	10	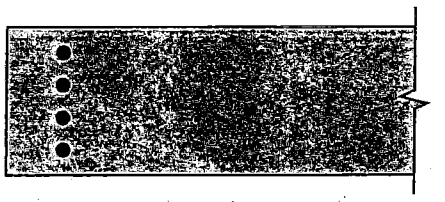
8	10	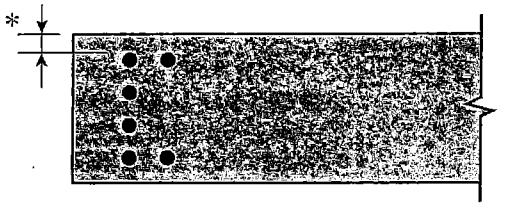 * For minimum cover see Section R611.5.4.1

NOTES

For SI: 1 inch = 25.4 mm.

1. See Table R611.7(4) for use of details.
2. Minimum length of solid wall segment and size and grade of reinforcement in each end of each solid wall segment shall be determined from Table R611.7(4).
3. For minimum cover requirements, see Section R611.5.4.1.
4. For details 3 - 8 where two or more bars are in the same row parallel to the end of the segment, place bars so that corner bars are as close to the sides of the wall segments as minimum cover requirements of Section R611.5.4.1 will permit.
5. For waffle- and screen-grid walls, each end of each solid wall segment shall have rectangular flanges. In the through-the-wall dimension, the flange shall not be less than $5^1/_2$ inches for 6-inch-nominal waffle- and screen-grid forms, and not less than $7^1/_2$ inches for 8-inch nominal waffle-grid forms. In the in-plane dimension, flanges shall be long enough to accommodate the vertical reinforcement required by the layout detail selected and provide the cover required by Section R611.5.4.1 If necessary to achieve the required dimensions, form material shall be removed or flat wall forms are permitted. See Table R611.7(4), Note e.

FIGURE R611.7(2)
VERTICAL REINFORCEMENT LAYOUT DETAIL

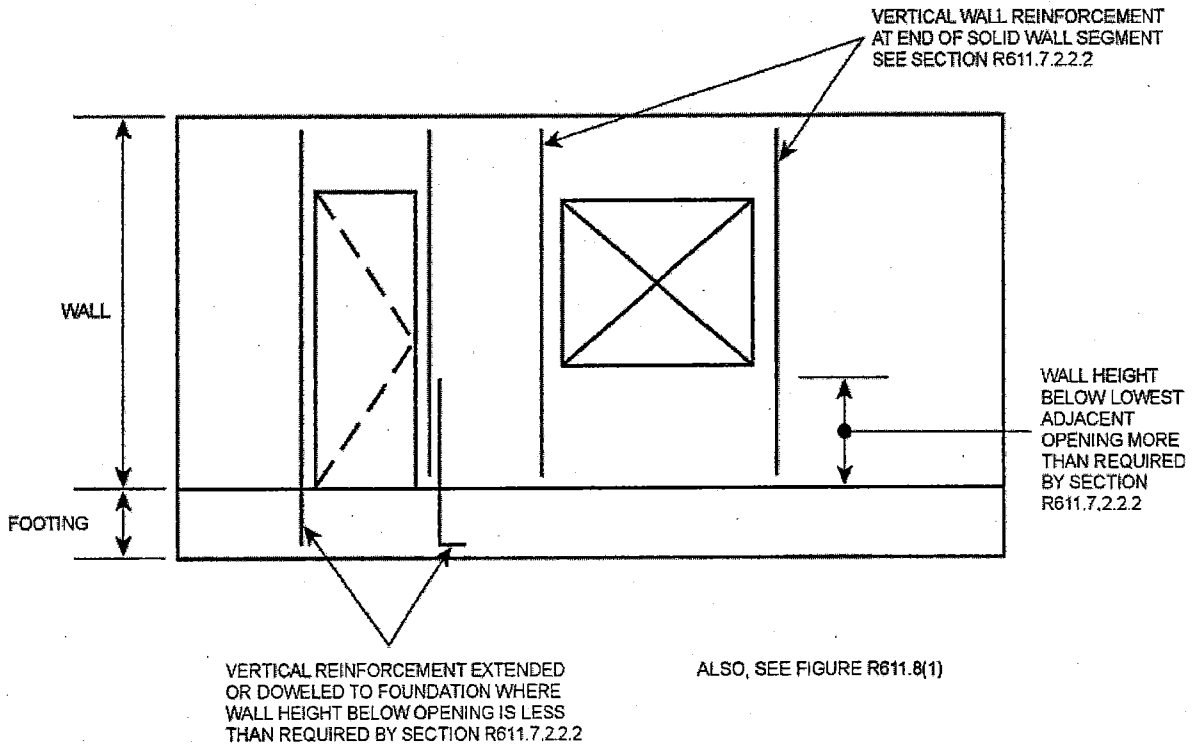

FIGURE R611.7(3)
VERTICAL WALL REINFORCEMENT ADJACENT TO WALL OPENINGS

R611.7.2.2.3 Vertical shear reinforcement. Where reduction factors for design strength, R_3, from Table R611.7(4) based on horizontal and vertical shear reinforcement being provided are used, solid wall segments shall have vertical reinforcement consisting of minimum No. 4 bars. Vertical shear reinforcement shall be the same grade of steel required by Section R611.7.2.2.2 for the vertical reinforcement at the ends of solid wall segments. The spacing of vertical reinforcement throughout the length of the segment shall not exceed the smaller of one third the length of the segment, and 18 inches (457 mm). Vertical shear reinforcement shall be continuous between stories in accordance with Section R611.6.3, and shall terminate in accordance with Section R611.6.4. Vertical shear reinforcement required by this section is permitted to be used for vertical reinforcement required by Table R611.6(1), R611.6(2), R611.6(3) or R611.6(4), whichever is applicable.

R611.7.2.3 Solid wall segments at corners. At all interior and exterior corners of exterior walls, a solid wall segment shall extend the full height of each wall story. The segment shall have the length required to develop the horizontal reinforcement above and below the adjacent opening in tension in accordance with Section R611.5.4.4. For an exterior corner, the limiting dimension is measured on the outside of the wall, and for an interior corner the limiting dimension is measured on the inside of the wall. See Section R611.8.1. The length of a segment contributing to the required length of solid wall shall comply with Section R611.7.2.1.

The end of a solid wall segment complying with the minimum length requirements of Section R611.7.2.1 shall be located no more than 6 feet (1829 mm) from each corner.

R611.8 Requirements for lintels and reinforcement around openings.

R611.8.1 Reinforcement around openings. Reinforcement shall be provided around openings in walls equal to or greater than 2 feet (610 mm) in width in accordance with this section and Figure R611.8(1), in addition to the minimum wall reinforcement required by Sections R404.1.2, R611.6 and R611.7. Vertical wall reinforcement required by this section is permitted to be used as reinforcement at the ends of solid wall segments required by Section R611.7.2.2.2 provided it is located in accordance with Section R611.8.1.2. Wall openings shall have a minimum depth of concrete over the width of the opening of 8 inches (203 mm) in flat walls and waffle-grid walls, and 12 inches (305 mm) in screen-grid walls. Wall openings in waffle-grid and screen-grid walls shall be located such that not less than one-half of a vertical core occurs along each side of the opening.

R611.8.1.1 Horizontal reinforcement. Lintels complying with Section R611.8.2 shall be provided above

wall openings equal to or greater than 2 feet (610 mm) in width.

Exception: Continuous horizontal wall reinforcement placed within 12 inches (305 mm) of the top of the wall story as required in Sections R404.1.2.2 and R611.6.2 is permitted in lieu of top or bottom lintel reinforcement required by Section R611.8.2 provided that the continuous horizontal wall reinforcement meets the location requirements specified in Figures R611.8(2), R611.8(3), and R611.8(4) and the size requirements specified in Tables R611.8(2) through R611.8(10).

Openings equal to or greater than 2 feet (610 mm) in width shall have a minimum of one No. 4 bar placed within 12 inches (305 mm) of the bottom of the opening. See Figure R611.8(1).

Horizontal reinforcement placed above and below an opening shall extend beyond the edges of the opening the dimension required to develop the bar in tension in accordance with Section R611.5.4.4.

R611.8.1.2 Vertical reinforcement. Not less than one No. 4 bar [Grade 40 (280 MPa)] shall be provided on each side of openings equal to or greater than 2 feet (610 mm) in width. The vertical reinforcement required by this section shall extend the full height of the wall story and shall be located within 12 inches (305 mm) of each side of the opening. The vertical reinforcement required on each side of an opening by this section is permitted to serve as reinforcement at the ends of solid wall segments in accordance with Section R611.7.2.2.2, provided it is located as required by the applicable detail in Figure R611.7(2). Where the vertical reinforcement required by this section is used to satisfy the requirements of Section R611.7.2.2.2 in waffle- and screen-grid walls, a concrete flange shall be created at the ends of the solid wall segments in accordance with Table R611.7(4), note e. In the top-most story, the reinforcement shall terminate in accordance with Section R611.6.4.

R611.8.2 Lintels. Lintels shall be provided over all openings equal to or greater than 2 feet (610 mm) in width. Lintels with uniform loading shall conform to Sections R611.8.2.1 and R611.8.2.2, or Section R611.8.2.3. Lintels supporting concentrated loads, such as from roof or floor beams or girders, shall be designed in accordance with ACI 318.

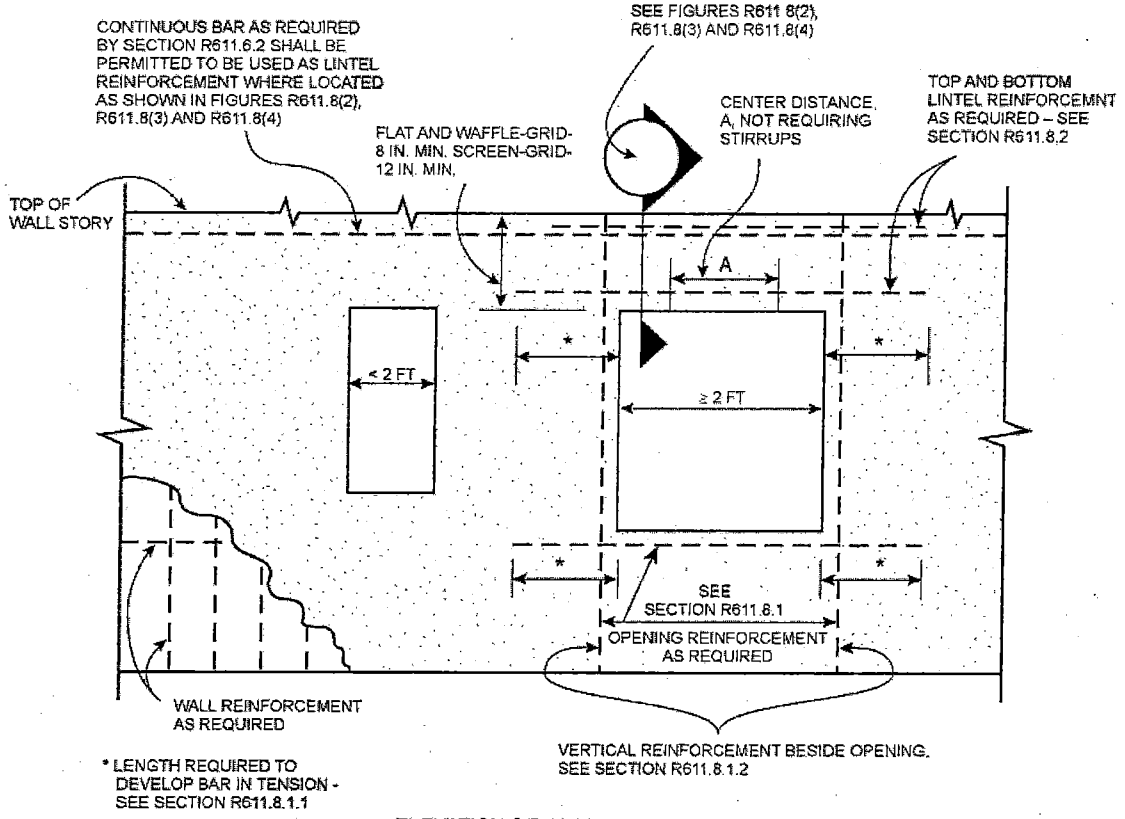

ELEVATION OF WALL

For SI: 1 inch = 25.4 mm, 1 foot = 304.8 mm.

FIGURE R611.8(1)
REINFORCEMENT OF OPENINGS

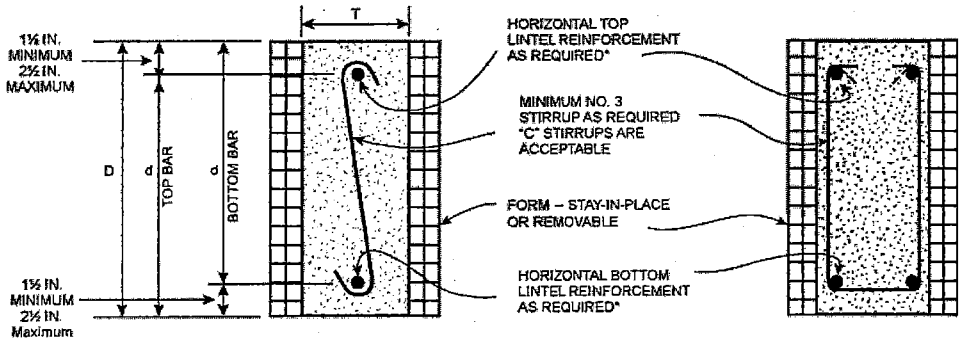

*FOR BUNDLED BARS, SEE SECTION R611.8.2.2.
SECTION CUT THROUGH FLAT WALL LINTEL

For SI: 1 inch = 25.4 mm.

FIGURE R611.8(2)
LINTEL FOR FLAT WALLS

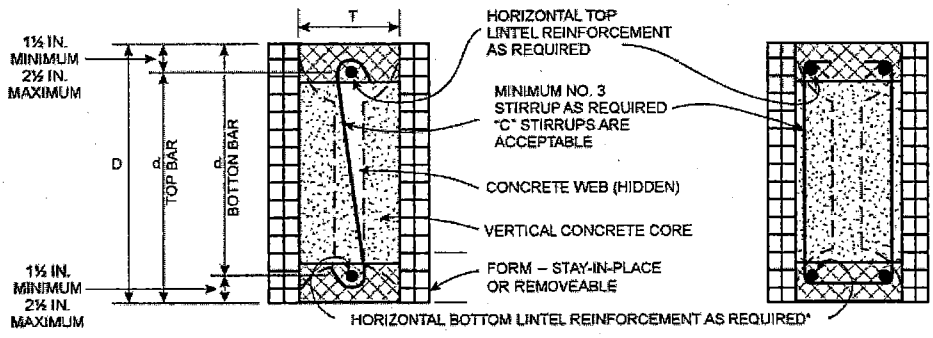

(a) SINGLE FORM HEIGHT SECTION CUT THROUGH VERTICAL CORE OF A WAFFLE-GRID LINTEL

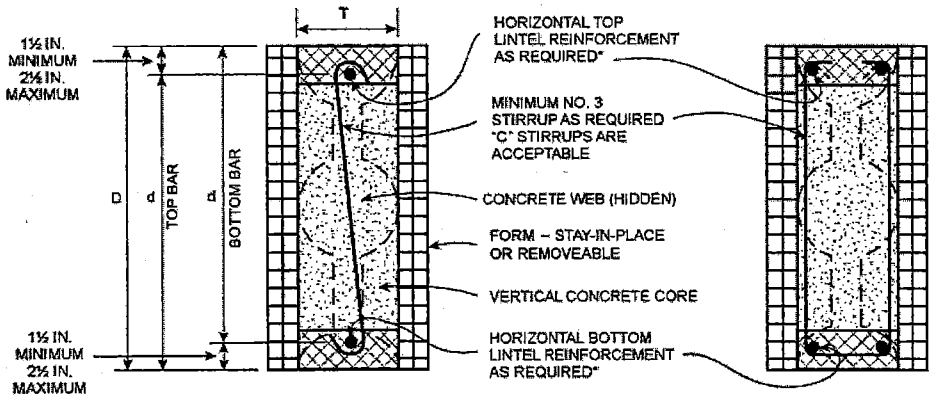

(b) DOUBLE FORM HEIGHT SECTION CUT THROUGH VERTICAL CORE OF A WAFFLE-GRID LINTEL

*FOR BUNDLED BARS, SEE SECTION R611.8.2.2.

NOTE: CROSS-HATCHING REPRESENTS THE AREA IN WHICH FORM MATERIAL SHALL BE REMOVED, IF NECESSARY, TO CREATE FLANGES CONTINUOUS THE LENGTH OF THE LINTEL. FLANGES SHALL HAVE A MINIMUM THICKNESS OF 3 IN., AND A MINIMUM WIDTH OF 5 IN. AND 7 IN. IN 6 IN. NOMINAL AND 8 IN. NOMINAL WAFFLE-GRID WALLS, RESPECTIVELY. SEE NOTE a TO TABLES R611.8(6) AND R611.8(10).

For SI: 1 inch = 25.4 mm.

FIGURE R611.8(3)
LINTELS FOR WAFFLE-GRID WALLS

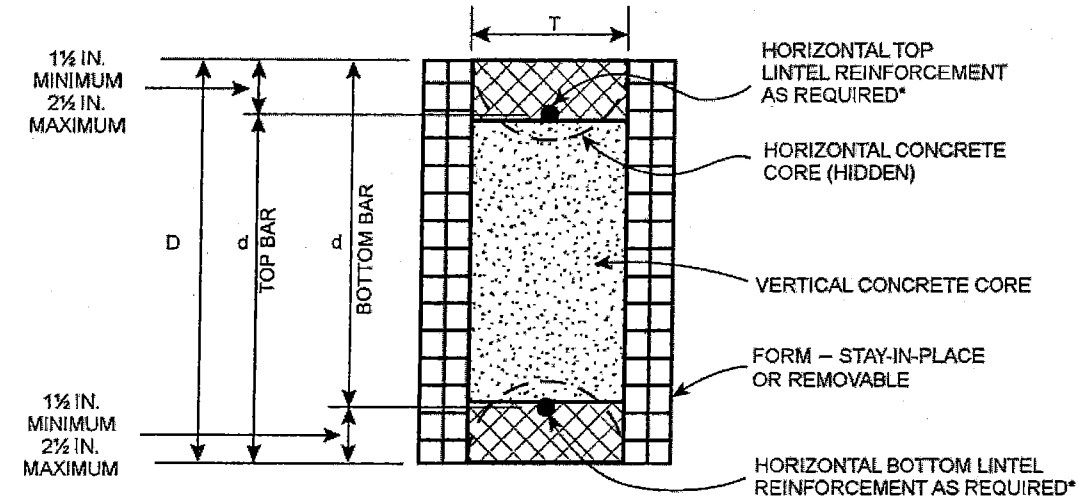

(a) SINGLE FORM HEIGHT SECTION CUT THROUGH VERTICAL CORE OF A SCREEN-GRID LINTEL

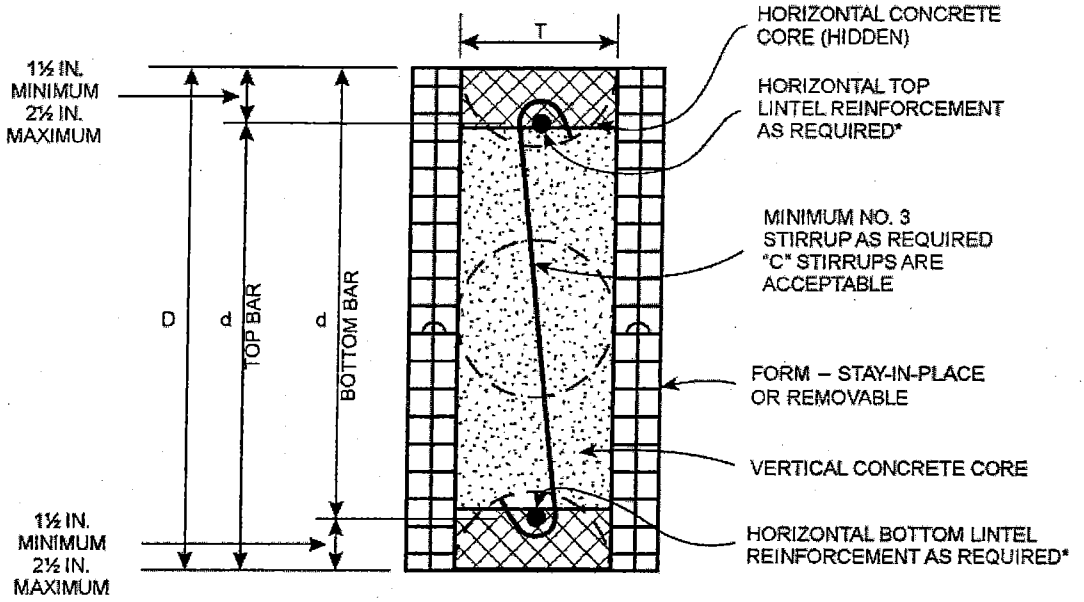

(b) DOUBLE FORM HEIGHT SECTION CUT THROUGH VERTICAL CORE OF A SCREEN-GRID LINTEL

*FOR BUNDLED BARS, SEE SECTION R611.8.2.2.

NOTE: CROSS-HATCHING REPRESENTS THE AREA IN WHICH FORM MATERIAL SHALL BE REMOVED, IF NECESSARY, TO CREATE FLANGES CONTINUOUS THE LENGTH OF THE LINTEL. FLANGES SHALL HAVE A MINIMUM THICKNESS OF 2.5 IN. AND A MINIMUM WIDTH OF 5 IN. SEE NOTE a TO TABLES R611.8(8) AND R611.8(10).

For SI: 1 inch = 25.4 mm.

FIGURE R611.8(4)
LINTELS FOR SCREEN-GRID WALLS

TABLE R611.8(1)
LINTEL DESIGN LOADING CONDITIONS[a, b, d]

DESCRIPTION OF LOADS AND OPENINGS ABOVE INFLUENCING DESIGN OF LINTEL			DESIGN LOAD CONDITION[c]
Opening in wall of top story of two-story building, or first story of one-story building			
Wall supporting loads from roof, including attic floor, if applicable, and	Top of lintel equal to or less than W/2 below top of wall		2
	Top of lintel greater than W/2 below top of wall		NLB
Wall not supporting loads from roof or attic floor			NLB
Opening in wall of first story of two-story building where wall immediately above is of concrete construction, or opening in basement wall of one-story building where wall immediately above is of concrete construction			
LB ledger board mounted to side of wall with bottom of ledger less than or equal to W/2 above top of lintel, and	Top of lintel greater than W/2 below bottom of opening in story above		1
	Top of lintel less than or equal to W/2 below bottom of opening in story above, and	Opening is entirely within the footprint of the opening in the story above	1
		Opening is partially within the footprint of the opening in the story above	4
LB ledger board mounted to side of wall with bottom of ledger more than W/2 above top of lintel			NLB
NLB ledger board mounted to side of wall with bottom of ledger less than or equal to W/2 above top of lintel, or no ledger board, and	Top of lintel greater than W/2 below bottom of opening in story above		NLB
	Top of lintel less than or equal to W/2 below bottom of opening in story above, and	Opening is entirely within the footprint of the opening in the story above	NLB
		Opening is partially within the footprint of the opening in the story above	1
Opening in basement wall of two-story building where walls of two stories above are of concrete construction			
LB ledger board mounted to side of wall with bottom of ledger less than or equal to W/2 above top of lintel, and	Top of lintel greater than W/2 below bottom of opening in story above		1
	Top of lintel less than or equal to W/2 below bottom of opening in story above, and	Opening is entirely within the footprint of the opening in the story above	1
		Opening is partially within the footprint of the opening in the story above	5
LB ledger board mounted to side of wall with bottom of ledger more than W/2 above top of lintel			NLB
NLB ledger board mounted to side of wall with bottom of ledger less than or equal to W/2 above top of lintel, or no ledger board, and	Top of lintel greater than W/2 below bottom of opening in story above		NLB
	Top of lintel less than or equal to W/2 below bottom of opening in story above, and	Opening is entirely within the footprint of the opening in the story above	NLB
		Opening is partially within the footprint of the opening in the story above	1
Opening in wall of first story of two-story building where wall immediately above is of light-framed construction, or opening in basement wall of one-story building, where wall immediately above is of light-framed construction			
Wall supporting loads from roof, second floor and top-story wall of light-framed construction, and	Top of lintel equal to or less than W/2 below top of wall		3
	Top of lintel greater than W/2 below top of wall		NLB
Wall not supporting loads from roof or second floor			NLB

a. LB means load bearing, NLB means nonload bearing, and W means width of opening.
b. Footprint is the area of the wall below an opening in the story above, bounded by the bottom of the opening and vertical lines extending downward from the edges of the opening.
c. For design loading condition "NLB" see Tables R611.8(9) and R611.8(10). For all other design loading conditions see Tables R611.8(2) through R611.8(8).
d. A NLB ledger board is a ledger attached to a wall that is parallel to the span of the floor, roof or ceiling framing that supports the edge of the floor, ceiling or roof.

TABLE R611.8(2)
MAXIMUM ALLOWABLE CLEAR SPANS FOR 4-INCH-NOMINAL THICK FLAT LINTELS IN LOAD-BEARING WALLS[a, b, c, d, e, f, m]
ROOF CLEAR SPAN 40 FEET AND FLOOR CLEAR SPAN 32 FEET

LINTEL DEPTH, D[g] (inches)	NUMBER OF BARS AND BAR SIZE IN TOP AND BOTTOM OF LINTEL	STEEL YIELD STRENGTH[h], f_y (psi)	DESIGN LOADING CONDITION DETERMINED FROM TABLE R611.8(1)								
			1	2		3		4		5	
			Maximum ground snow load (psf)								
			—	30	70	30	70	30	70	30	70
			Maximum clear span of lintel (feet - inches)								
8	Span without stirrups[i, j]		3-2	3-4	2-4	2-6	2-2	2-1	2-0	2-0	2-0
	1-#4	40,000	5-2	5-5	4-1	4-3	3-10	3-7	3-4	2-9	2-9
		60,000	6-2	6-5	4-11	5-1	4-6	4-2	3-8	2-11	2-10
	1-#5	40,000	6-3	6-7	5-0	5-2	4-6	4-2	3-8	2-11	2-10
		60,000	DR	DR	DR	DR	DR	DR	DR	DR	DR
	Center distance A[k, l]		1-1	1-2	0-8	0-9	0-7	0-6	0-5	0-4	0-4
12	Span without stirrups[i, j]		3-4	3-7	2-9	2-11	2-8	2-6	2-5	2-2	2-2
	1-#4	40,000	6-7	7-0	5-4	5-7	5-0	4-9	4-4	3-8	3-7
		60,000	7-11	8-6	6-6	6-9	6-0	5-9	5-3	4-5	4-4
	1-#5	40,000	8-1	8-8	6-7	6-10	6-2	5-10	5-4	4-6	4-5
		60,000	9-8	10-4	7-11	8-2	7-4	6-11	6-2	4-10	4-8
	2-#4 1-#6	40,000	9-1	9-8	7-4	7-8	6-10	6-6	6-0	4-10	4-8
		60,000	DR	DR	DR	DR	DR	DR	DR	DR	DR
	Center distance A[k, l]		1-8	1-11	1-1	1-3	1-0	0-11	0-9	0-6	0-6
16	Span without stirrups[i, j]		4-7	5-0	3-11	4-0	3-8	3-7	3-4	3-1	3-0
	1-#4	40,000	6-8	7-3	5-6	5-9	5-2	4-11	4-6	3-10	3-8
		60,000	9-3	10-1	7-9	8-0	7-2	6-10	6-3	5-4	5-2
	1-#4	40,000	9-6	10-4	7-10	8-2	7-4	6-11	6-5	5-5	5-3
		60,000	11-5	12-5	9-6	9-10	8-10	8-4	7-9	6-6	6-4
	2-#4 1-#6	40,000	10-7	11-7	8-10	9-2	8-3	7-9	7-2	6-1	5-11
		60,000	12-9	13-10	10-7	11-0	9-10	9-4	8-7	6-9	6-6
	2-#5	40,000	13-0	14-1	10-9	11-2	9-11	9-2	8-2	6-6	6-3
		60,000	DR	DR	DR	DR	DR	DR	DR	DR	DR
	Center distance[k, l]		2-3	2-8	1-7	1-8	1-4	1-3	1-0	0-9	0-8
20	Span without stirrups[i, j]		5-9	6-5	5-0	5-2	4-9	4-7	4-4	3-11	3-11
	1-#4	40,000	7-5	8-2	6-3	6-6	5-10	5-7	5-1	4-4	4-2
		60,000	9-0	10-0	7-8	7-11	7-1	6-9	6-3	5-3	5-1
	1-#5	40,000	9-2	10-2	7-9	8-1	7-3	6-11	6-4	5-4	5-2
		60,000	12-9	14-2	10-10	11-3	10-1	9-7	8-10	7-5	7-3
	2-#4 1-#6	40,000	11-10	13-2	10-1	10-5	9-4	8-11	8-2	6-11	6-9
		60,000	14-4	15-10	12-1	12-7	11-3	10-9	9-11	8-4	8-1
	2-#5	40,000	14-7	16-2	12-4	12-9	11-4	10-6	9-5	7-7	7-3
		60,000	17-5	19-2	14-9	15-3	13-5	12-4	11-0	8-8	8-4
	2-#6	40,000	16-4	18-11	12-7	13-3	11-4	10-6	9-5	7-7	7-3
		60,000	DR	DR	DR	DR	DR	DR	DR	DR	DR
	Center distance A[k, l]		2-9	3-5	2-0	2-2	1-9	1-7	1-4	0-11	0-11

(continued)

TABLE R611.8(2)—continued
MAXIMUM ALLOWABLE CLEAR SPANS FOR 4-INCH-NOMINAL THICK FLAT LINTELS IN LOAD-BEARING WALLS[a, b, c, d, e, f, m]
ROOF CLEAR SPAN 40 FEET AND FLOOR CLEAR SPAN 32 FEET

LINTEL DEPTH, D[g] (inches)	NUMBER OF BARS AND BAR SIZE IN TOP AND BOTTOM OF LINTEL	STEEL YIELD STRENGTH[h], f_y (psi)	DESIGN LOADING CONDITION DETERMINED FROM TABLE R611.8(1)								
			1	2		3		4		5	
			Maximum ground snow load (psf)								
			—	30	70	30	70	30	70	30	70
			Maximum clear span of lintel (feet - inches)								
24	Span without stirrups[i, j]		6-11	7-9	6-1	6-3	5-9	5-7	5-3	4-9	4-8
	1-#4	40,000	8-0	9-0	6-11	7-2	6-5	6-2	5-8	4-9	4-8
		60,000	9-9	11-0	8-5	8-9	7-10	7-6	6-11	5-10	5-8
	1-#5	40,000	10-0	11-3	8-7	8-11	8-0	7-7	7-0	5-11	5-9
		60,000	13-11	15-8	12-0	12-5	11-2	10-7	9-10	8-3	8-0
	2-#4 1-#6	40,000	12-11	14-6	11-2	11-6	10-5	9-10	9-1	7-8	7-5
		60,000	15-7	17-7	13-6	13-11	12-7	11-11	11-0	9-3	9-0
	2-#5	40,000	15-11	17-11	13-7	14-3	12-8	11-9	10-8	8-7	8-4
		60,000	19-1	21-6	16-5	17-1	15-1	14-0	12-6	9-11	9-7
	2-#6	40,000	17-7	21-1	14-1	14-10	12-8	11-9	10-8	8-7	8-4
		60,000	DR	DR	DR	DR	DR	DR	DR	DR	DR
	Center distance A[k, l]		3-3	4-1	2-5	2-7	2-1	1-11	1-7	1-2	1-1

For SI: 1 inch = 25.4 mm, 1 foot = 304.8 mm, 1 pound per square foot = 0.0479 kPa, Grade 40 = 280 MPa, Grade 60 = 420 MPa.

a. See Table R611.3 for tolerances permitted from nominal thickness.

b. Table values are based on concrete with a minimum specified compressive strength of 2,500 psi. See Note j.

c. Table values are based on uniform loading. See Section R611.8.2 for lintels supporting concentrated loads.

d. Deflection criterion is $L/240$, where L is the clear span of the lintel in inches, or $^1/_2$-inch, whichever is less.

e. Linear interpolation is permitted between ground snow loads and between lintel depths.

f. DR indicates design required.

g. Lintel depth, D, is permitted to include the available height of wall located directly above the lintel, provided that the increased lintel depth spans the entire length of the lintel.

h. Stirrups shall be fabricated from reinforcing bars with the same yield strength as that used for the main longitudinal reinforcement.

i. Allowable clear span without stirrups applicable to all lintels of the same depth, D. Top and bottom reinforcement for lintels without stirrups shall not be less than the least amount of reinforcement required for a lintel of the same depth and loading condition with stirrups. All other spans require stirrups spaced at not more than $d/2$.

j. Where concrete with a minimum specified compressive strength of 3,000 psi is used, clear spans for lintels without stirrups shall be permitted to be multiplied by 1.05. If the increased span exceeds the allowable clear span for a lintel of the same depth and loading condition with stirrups, the top and bottom reinforcement shall be equal to or greater than that required for a lintel of the same depth and loading condition that has an allowable clear span that is equal to or greater than that of the lintel without stirrups that has been increased.

k. Center distance, A, is the center portion of the clear span where stirrups are not required. This is applicable to all longitudinal bar sizes and steel yield strengths.

l. Where concrete with a minimum specified compressive strength of 3,000 psi is used, center distance, A, shall be permitted to be multiplied by 1.10.

m. The maximum clear opening width between two solid wall segments shall be 18 feet. See Section R611.7.2.1. Lintel clear spans in the table greater than 18 feet are shown for interpolation and information only.

TABLE R611.8(3)
MAXIMUM ALLOWABLE CLEAR SPANS FOR 6-INCH-NOMINAL THICK FLAT LINTELS IN LOAD-BEARING WALLS[a, b, c, d, e, f, m]
ROOF CLEAR SPAN 40 FEET AND FLOOR CLEAR SPAN 32 FEET

LINTEL DEPTH, D[g] (inches)	NUMBER OF BARS AND BAR SIZE IN TOP AND BOTTOM OF LINTEL	STEEL YIELD STRENGTH[h], f_y (psi)	DESIGN LOADING CONDITION DETERMINED FROM TABLE R611.8(1)								
			1	2		3		4		5	
			Maximum ground snow load (psf)								
			—	30	70	30	70	30	70	30	70
			Maximum clear span of lintel (feet - inches)								
8	Span without stirrups[i, j]		4-2	4-8	3-1	3-3	2-10	2-6	2-3	2-0	2-0
	1-#4	40,000	5-1	5-5	4-2	4-3	3-10	3-6	3-3	2-8	2-7
		60,000	6-2	6-7	5-0	5-2	4-8	4-2	3-11	3-3	3-2
	1-#5	40,000	6-3	6-8	5-1	5-3	4-9	4-3	4-0	3-3	3-2
		60,000	7-6	8-0	6-1	6-4	5-8	5-1	4-9	3-8	3-6
	2-#4 1-#6	40,000	7-0	7-6	5-8	5-11	5-3	4-9	4-5	3-8	3-6
		60,000	DR	DR	DR	DR	DR	DR	DR	DR	DR
	Center distance $A^{k, l}$		1-7	1-10	1-1	1-2	0-11	0-9	0-8	0-5	0-5
12	Span without stirrups[i, j]		4-2	4-8	3-5	3-6	3-2	2-11	2-9	2-5	2-4
	1-#4	40,000	5-7	6-1	4-8	4-10	4-4	3-11	3-8	3-0	2-11
		60,000	7-9	8-6	6-6	6-9	6-1	5-6	5-1	4-3	4-1
	1-#5	40,000	7-11	8-8	6-8	6-11	6-2	5-7	5-2	4-4	4-2
		60,000	9-7	10-6	8-0	8-4	7-6	6-9	6-3	5-2	5-1
	2-#4 1-#6	40,000	8-11	9-9	7-6	7-9	6-11	6-3	5-10	4-10	4-8
		60,000	10-8	11-9	8-12	9-4	8-4	7-6	7-0	5-10	5-8
	2-#5	40,000	10-11	12-0	9-2	9-6	8-6	7-8	7-2	5-6	5-3
		60,000	12-11	14-3	10-10	11-3	10-1	9-0	8-1	6-1	5-10
	2-#6	40,000	12-9	14-0	10-8	11-1	9-7	8-1	7-3	5-6	5-3
		60,000	DR	DR	DR	DR	DR	DR	DR	DR	DR
	Center distance $A^{k, l}$		2-6	3-0	1-9	1-10	1-6	1-3	1-1	0-9	0-8
16	Span without stirrups[i, j]		5-7	6-5	4-9	4-11	4-5	4-0	3-10	3-4	3-4
	1-#4	40,000	6-5	7-2	5-6	5-9	5-2	4-8	4-4	3-7	3-6
		60,000	7-10	8-9	6-9	7-0	6-3	5-8	5-3	4-4	4-3
	1-#5	40,000	7-11	8-11	6-10	7-1	6-5	5-9	5-4	4-5	4-4
		60,000	11-1	12-6	9-7	9-11	8-11	8-0	7-6	6-2	6-0
	2-#4 1-#6	40,000	10-3	11-7	8-10	9-2	8-3	7-6	6-11	5-9	5-7
		60,000	12-5	14-0	10-9	11-1	10-0	9-0	8-5	7-0	6-9
	2-#5	40,000	12-8	14-3	10-11	11-4	10-2	9-2	8-7	6-9	6-6
		60,000	15-2	17-1	13-1	13-7	12-3	11-0	10-3	7-11	7-7
	2-#6	40,000	14-11	16-9	12-8	13-4	11-4	9-8	8-8	6-9	6-6
		60,000	DR	DR	DR	DR	DR	DR	DR	DR	DR
	Center distance $A^{k, l}$		3-3	4-1	2-5	2-7	2-1	1-9	1-6	1-0	1-0

(continued)

TABLE R611.8(3)—continued
MAXIMUM ALLOWABLE CLEAR SPANS FOR 6-INCH-NOMINAL THICK FLAT LINTELS IN LOAD-BEARING WALLS[a, b, c, d, e, f, m]
ROOF CLEAR SPAN 40 FEET AND FLOOR CLEAR SPAN 32 FEET

LINTEL DEPTH, D[g] (inches)	NUMBER OF BARS AND BAR SIZE IN TOP AND BOTTOM OF LINTEL	STEEL YIELD STRENGTH[h], f_y (psi)	DESIGN LOADING CONDITION DETERMINED FROM TABLE R611.8(1)								
			1	2		3		4		5	
			Maximum ground snow load (psf)								
			—	30	70	30	70	30	70	30	70
			Maximum clear span of lintel (feet - inches)								
20	Span without stirrups[i, j]		6-11	8-2	6-1	6-3	5-8	5-2	4-11	4-4	4-3
	1-#5	40,000	8-9	10-1	7-9	8-0	7-3	6-6	6-1	5-1	4-11
		60,000	10-8	12-3	9-5	9-9	8-10	8-0	7-5	6-2	6-0
	2-#4 1-#6	40,000	9-11	11-4	8-9	9-1	8-2	7-4	6-10	5-8	5-7
		60,000	13-9	15-10	12-2	12-8	11-5	10-3	9-7	7-11	7-9
	2-#5	40,000	14-0	16-2	12-5	12-11	11-7	10-6	9-9	7-11	7-8
		60,000	16-11	19-6	15-0	15-6	14-0	12-7	11-9	9-1	8-9
	2-#6	40,000	16-7	19-1	14-7	15-3	13-1	11-3	10-2	7-11	7-8
		60,000	19-11	22-10	17-4	18-3	15-6	13-2	11-10	9-1	8-9
	Center distance A[k, l]		3-11	5-2	3-1	3-3	2-8	2-2	1-11	1-4	1-3
24	Span without stirrups[i, j]		8-2	9-10	7-4	7-8	6-11	6-4	5-11	5-3	5-2
	1-#5	40,000	9-5	11-1	8-7	8-10	8-0	7-3	6-9	5-7	5-5
		60,000	11-6	13-6	10-5	10-9	9-9	8-9	8-2	6-10	6-8
	2-#4 1-#6	40,000	10-8	12-6	9-8	10-0	9-0	8-2	7-7	6-4	6-2
		60,000	12-11	15-2	11-9	12-2	11-0	9-11	9-3	7-8	7-6
	2-#5	40,000	15-2	17-9	13-9	14-3	12-10	11-7	10-10	9-0	8-9
		60,000	18-4	21-6	16-7	17-3	15-6	14-0	13-1	10-4	10-0
	2-#6	40,000	18-0	21-1	16-4	16-11	14-10	12-9	11-8	9-2	8-11
		60,000	21-7	25-4	19-2	20-4	17-2	14-9	13-4	10-4	10-0
	Center distance A[k, l]		4-6	6-2	3-8	4-0	3-3	2-8	2-3	1-7	1-6

For SI: 1 inch = 25.4 mm, 1 foot = 304.8 mm, 1 pounds per square foot = 0.0479 kPa, Grade 40 = 280 MPa, Grade 60 = 420 MPa.

a. See Table R611.3 for tolerances permitted from nominal thickness.

b. Table values are based on concrete with a minimum specified compressive strength of 2,500 psi. See Note j.

c. Table values are based on uniform loading. See Section R611.8.2 for lintels supporting concentrated loads.

d. Deflection criterion is $L/240$, where L is the clear span of the lintel in inches, or $^1/_2$-inch, whichever is less.

e. Linear interpolation is permitted between ground snow loads and between lintel depths.

f. DR indicates design required.

g. Lintel depth, D, is permitted to include the available height of wall located directly above the lintel, provided that the increased lintel depth spans the entire length of the lintel.

h. Stirrups shall be fabricated from reinforcing bars with the same yield strength as that used for the main longitudinal reinforcement.

i. Allowable clear span without stirrups applicable to all lintels of the same depth, D. Top and bottom reinforcement for lintels without stirrups shall not be less than the least amount of reinforcement required for a lintel of the same depth and loading condition with stirrups. All other spans require stirrups spaced at not more than $d/2$.

j. Where concrete with a minimum specified compressive strength of 3,000 psi is used, clear spans for lintels without stirrups shall be permitted to be multiplied by 1.05. If the increased span exceeds the allowable clear span for a lintel of the same depth and loading condition with stirrups, the top and bottom reinforcement shall be equal to or greater than that required for a lintel of the same depth and loading condition that has an allowable clear span that is equal to or greater than that of the lintel without stirrups that has been increased.

k. Center distance, A, is the center portion of the clear span where stirrups are not required. This is applicable to all longitudinal bar sizes and steel yield strengths.

l. Where concrete with a minimum specified compressive strength of 3,000 psi is used, center distance, A, shall be permitted to be multiplied by 1.10.

m. The maximum clear opening width between two solid wall segments shall be 18 feet. See Section R611.7.2.1. Lintel clear spans in the table greater than 18 feet are shown for interpolation and information only.

TABLE R611.8(4)
MAXIMUM ALLOWABLE CLEAR SPANS FOR 8-INCH-NOMINAL THICK FLAT LINTELS IN LOAD-BEARING WALLS[a, b, c, d, e, f, m]
ROOF CLEAR SPAN 40 FEET AND FLOOR CLEAR SPAN 32 FEET

LINTEL DEPTH, D[g] (inches)	NUMBER OF BARS AND BAR SIZE IN TOP AND BOTTOM OF LINTEL	STEEL YIELD STRENGTH[h], f_y (psi)	DESIGN LOADING CONDITION DETERMINED FROM TABLE R611.8(1)								
			1	2		3		4		5	
			Maximum ground snow load (psf)								
			—	30	70	30	70	30	70	30	70
			Maximum clear span of lintel (feet - inches)								
8	Span without stirrups[i, j]		4-4	4-9	3-7	3-9	3-4	2-10	2-7	2-1	2-0
	1-#4	40,000	4-4	4-9	3-7	3-9	3-4	2-11	2-9	2-3	2-2
		60,000	6-1	6-7	5-0	5-3	4-8	4-0	3-9	3-1	3-0
	1-#5	40,000	6-2	6-9	5-2	5-4	4-9	4-1	3-10	3-2	3-1
		60,000	7-5	8-1	6-2	6-5	5-9	4-11	4-7	3-9	3-8
	2-#4 1-#6	40,000	6-11	7-6	5-9	6-0	5-4	4-7	4-4	3-6	3-5
		60,000	8-3	9-0	6-11	7-2	6-5	5-6	5-2	4-2	4-1
	2-#5	40,000	8-5	9-2	7-0	7-3	6-6	5-7	5-3	4-2	4-0
		60,000	DR	DR	DR	DR	DR	DR	DR	DR	DR
	Center distance $A^{k, l}$		2-1	2-6	1-5	1-6	1-3	0-11	0-10	0-6	0-6
12	Span without stirrups[i, j]		4-10	5-8	4-0	4-2	3-9	3-2	3-0	2-7	2-6
	1-#4	40,000	5-5	6-1	4-8	4-10	4-4	3-9	3-6	2-10	2-10
		60,000	6-7	7-5	5-8	5-11	5-4	4-7	4-3	3-6	3-5
	1-#5	40,000	6-9	7-7	5-9	6-0	5-5	4-8	4-4	3-7	3-6
		60,000	9-4	10-6	8-1	8-4	7-6	6-6	6-1	5-0	4-10
	2-#4 1-#6	40,000	8-8	9-9	7-6	7-9	7-0	6-0	5-8	4-7	4-6
		60,000	10-6	11-9	9-1	9-5	8-5	7-3	6-10	5-7	5-5
	2-#5	40,000	10-8	12-0	9-3	9-7	8-7	7-5	6-11	5-6	5-4
		60,000	12-10	14-5	11-1	11-6	10-4	8-11	8-4	6-7	6-4
	2-#6	40,000	12-7	14-2	10-10	11-3	10-2	8-3	7-6	5-6	5-4
		60,000	DR	DR	DR	DR	DR	DR	DR	DR	DR
	Center distance $A^{k, l}$		3-2	4-0	2-4	2-6	2-0	1-6	1-4	0-11	0-10
16	Span without stirrups[i, j]		6-5	7-9	5-7	5-10	5-2	4-5	4-2	3-7	3-6
	1-#4	40,000	6-2	7-1	5-6	5-8	5-1	4-5	4-2	3-5	3-4
		60,000	7-6	8-8	6-8	6-11	6-3	5-5	5-1	4-2	4-0
	1-#5	40,000	7-8	8-10	6-10	7-1	6-4	5-6	5-2	4-3	4-1
		60,000	9-4	10-9	8-4	8-7	7-9	6-8	6-3	5-2	5-0
	2-#4 1-#6	40,000	8-8	10-0	7-8	8-0	7-2	6-2	5-10	4-9	4-8
		60,000	12-0	13-11	10-9	11-2	10-0	8-8	8-1	6-8	6-6
	2-#5	40,000	12-3	14-2	11-0	11-4	10-3	8-10	8-3	6-9	6-7
		60,000	14-10	17-2	13-3	13-8	12-4	10-8	10-0	7-11	7-8
	2-#6	40,000	14-6	16-10	13-0	13-5	12-1	10-1	9-2	6-11	6-8
		60,000	17-5	20-2	15-7	16-1	14-6	11-10	10-8	7-11	7-8
	Center distance[k, l]		4-1	5-5	3-3	3-6	2-10	2-1	1-10	1-3	1-2

(continued)

TABLE R611.8(4)—continued
MAXIMUM ALLOWABLE CLEAR SPANS FOR 8-INCH-NOMINAL THICK FLAT LINTELS IN LOAD-BEARING WALLS[a, b, c, d, e, f, m]
ROOF CLEAR SPAN 40 FEET AND FLOOR CLEAR SPAN 32 FEET

LINTEL DEPTH, D[g] (inches)	NUMBER OF BARS AND BAR SIZE IN TOP AND BOTTOM OF LINTEL	STEEL YIELD STRENGTH[h], f_y (psi)	DESIGN LOADING CONDITION DETERMINED FROM TABLE R611.8(1)								
			1	2		3		4		5	
			Maximum ground snow load (psf)								
			—	30	70	30	70	30	70	30	70
			Maximum clear span of lintel (feet - inches)								
20	Span without stirrups[i, j]		7-10	9-10	7-1	7-5	6-7	5-8	5-4	4-7	4-6
	1-#5	40,000	8-4	9-11	7-8	8-0	7-2	6-3	5-10	4-9	4-8
		60,000	10-2	12-1	9-5	9-9	8-9	7-7	7-1	5-10	5-8
	2-#4 1-#6	40,000	9-5	11-3	8-8	9-0	8-1	7-0	6-7	5-5	5-3
		60,000	11-6	13-8	10-7	11-0	9-11	8-7	8-0	6-7	6-5
	2-#5	40,000	11-9	13-11	10-10	11-2	10-1	8-9	8-2	6-8	6-7
		60,000	16-4	19-5	15-0	15-7	14-0	12-2	11-4	9-3	9-0
	2-#6	40,000	16-0	19-0	14-9	15-3	13-9	11-10	10-10	8-3	8-0
		60,000	19-3	22-11	17-9	18-5	16-7	13-7	12-4	9-3	9-0
	Center distance A[k, l]		4-10	6-10	4-1	4-5	3-7	2-8	2-4	1-7	1-6
24	Span without stirrups[i, j]		9-2	11-9	8-7	8-11	8-0	6-11	6-6	5-7	5-6
	1-#5	40,000	8-11	10-10	8-6	8-9	7-11	6-10	6-5	5-3	5-2
		60,000	10-11	13-3	10-4	10-8	9-8	8-4	7-10	6-5	6-3
	2-#4 1-#6	40,000	10-1	12-3	9-7	9-11	8-11	7-9	7-3	6-0	5-10
		60,000	12-3	15-0	11-8	12-1	10-11	9-5	8-10	7-3	7-1
	2-#5	40,000	12-6	15-3	11-11	12-4	11-1	9-7	9-0	7-5	7-3
		60,000	17-6	21-3	16-7	17-2	15-6	13-5	12-7	10-4	10-1
	2-#6	40,000	17-2	20-11	16-3	16-10	15-3	13-2	12-4	9-7	9-4
		60,000	20-9	25-3	19-8	20-4	18-5	15-4	14-0	10-7	10-3
	Center distance A[k, l]		5-6	8-1	4-11	5-3	4-4	3-3	2-10	1-11	1-10

For SI: 1 inch = 25.4 mm, 1 foot = 304.8 mm, 1 pound per square foot = 0.0479 kPa, Grade 40 = 280 MPa; Grade 60 = 420 MPa.

Note: Top and bottom reinforcement for lintels without stirrups shown in shaded cells shall be equal to or greater than that required for lintel of the same depth and loading condition that has an allowable clear span that is equal to or greater than that of the lintel without stirrups.

a. See Table R611.3 for tolerances permitted from nominal thickness.

b. Table values are based on concrete with a minimum specified compressive strength of 2,500 psi. See Note j.

c. Table values are based on uniform loading. See Section R611.8.2 for lintels supporting concentrated loads.

d. Deflection criterion is $L/240$, where L is the clear span of the lintel in inches, or $^1/_2$-inch, whichever is less.

e. Linear interpolation is permitted between ground snow loads and between lintel depths.

f. DR indicates design required.

g. Lintel depth, D, is permitted to include the available height of wall located directly above the lintel, provided that the increased lintel depth spans the entire length of the lintel.

h. Stirrups shall be fabricated from reinforcing bars with the same yield strength as that used for the main longitudinal reinforcement.

i. Allowable clear span without stirrups applicable to all lintels of the same depth, D. Top and bottom reinforcement for lintels without stirrups shall not be less than the least amount of reinforcement required for a lintel of the same depth and loading condition with stirrups. All other spans require stirrups spaced at not more than $d/2$.

j. Where concrete with a minimum specified compressive strength of 3,000 psi is used, clear spans for lintels without stirrups shall be permitted to be multiplied by 1.05. If the increased span exceeds the allowable clear span for a lintel of the same depth and loading condition with stirrups, the top and bottom reinforcement shall be equal to or greater than that required for a lintel of the same depth and loading condition that has an allowable clear span that is equal to or greater than that of the lintel without stirrups that has been increased.

k. Center distance, A, is the center portion of the clear span where stirrups are not required. This is applicable to all longitudinal bar sizes and steel yield strengths.

l. Where concrete with a minimum specified compressive strength of 3,000 psi is used, center distance, A, shall be permitted to be multiplied by 1.10.

m. The maximum clear opening width between two solid wall segments shall be 18 feet. See Section R611.7.2.1. Lintel clear spans in the table greater than 18 feet are shown for interpolation and information only.

TABLE R611.8(5)
MAXIMUM ALLOWABLE CLEAR SPANS FOR 10-INCH-NOMINAL THICK FLAT LINTELS IN LOAD-BEARING WALLS[a, b, c, d, e, f, m]
ROOF CLEAR SPAN 40 FEET AND FLOOR CLEAR SPAN 32 FEET

LINTEL DEPTH, D[g] (inches)	NUMBER OF BARS AND BAR SIZE IN TOP AND BOTTOM OF LINTEL	STEEL YIELD STRENGTH[h], f_y (psi)	DESIGN LOADING CONDITION DETERMINED FROM TABLE R611.8(1)								
			1	2		3		4		5	
			Maximum ground snow load (psf)								
			—	30	70	30	70	30	70	30	70
			Maximum clear span of lintel (feet - inches)								
8	Span without stirrups[i, j]		6-0	7-2	4-7	4-10	4-1	3-1	2-11	2-3	2-2
	1-#4	40,000	4-3	4-9	3-7	3-9	3-4	2-9	2-7	2-1	2-1
		60,000	5-11	6-7	5-0	5-3	4-8	3-10	3-8	2-11	2-11
	1-#5	40,000	6-1	6-9	5-2	5-4	4-9	3-11	3-9	3-0	2-11
		60,000	7-4	8-1	6-3	6-5	5-9	4-9	4-6	3-7	3-7
	2-#4 1-#6	40,000	6-10	7-6	5-9	6-0	5-5	4-5	4-2	3-4	3-4
		60,000	8-2	9-1	6-11	7-2	6-6	5-4	5-0	4-1	4-0
	2-#5	40,000	8-4	9-3	7-1	7-4	6-7	5-5	5-1	4-1	4-0
		60,000	9-11	11-0	8-5	8-9	7-10	6-6	6-1	4-8	4-6
	2-#6	40,000	9-9	10-10	8-3	8-7	7-9	6-4	5-10	4-1	4-0
		60,000	DR	DR	DR	DR	DR	DR	DR	DR	DR
	Center distance A[k, l]		2-6	3-1	1-10	1-11	1-7	1-1	0-11	0-7	0-7
12	Span without stirrups[i, j]		5-5	6-7	4-7	4-10	4-3	3-5	3-3	2-8	2-8
	1-#4	40,000	5-3	6-0	4-8	4-10	4-4	3-7	3-4	2-9	2-8
		60,000	6-5	7-4	5-8	5-10	5-3	4-4	4-1	3-4	3-3
	1-#5	40,000	6-6	7-6	5-9	6-0	5-5	4-5	4-2	3-5	3-4
		60,000	7-11	9-1	7-0	7-3	6-7	5-5	5-1	4-2	4-0
	2-#4 1-#6	40,000	7-4	8-5	6-6	6-9	6-1	5-0	4-9	3-10	3-9
		60,000	10-3	11-9	9-1	9-5	8-6	7-0	6-7	5-4	5-3
	2-#5	40,000	10-5	12-0	9-3	9-7	8-8	7-2	6-9	5-5	5-4
		60,000	12-7	14-5	11-2	11-6	10-5	8-7	8-1	6-6	6-4
	2-#6	40,000	12-4	14-2	10-11	11-4	10-2	8-5	7-8	5-7	5-5
		60,000	14-9	17-0	13-1	13-6	12-2	10-0	9-1	6-6	6-4
	Center distance A[k, l]		3-9	4-11	2-11	3-2	2-7	1-9	1-7	1-0	1-0
16	Span without stirrups[i, j]		7-1	9-0	6-4	6-8	5-10	4-9	4-6	3-9	3-8
	1-#4	40,000	5-11	7-0	5-5	5-8	5-1	4-3	4-0	3-3	3-2
		60,000	7-3	8-7	6-8	6-11	6-3	5-2	4-10	3-11	3-10
	1-#5	40,000	7-4	8-9	6-9	7-0	6-4	5-3	4-11	4-0	3-11
		60,000	9-0	10-8	8-3	8-7	7-9	6-5	6-0	4-11	4-9
	2-#4 1-#6	40,000	8-4	9-11	7-8	7-11	7-2	5-11	5-7	4-6	4-5
		60,000	10-2	12-0	9-4	9-8	8-9	7-3	6-10	5-6	5-5
	2-#5	40,000	10-4	12-3	9-6	9-10	8-11	7-4	6-11	5-8	5-6
		60,000	14-4	17-1	13-3	13-8	12-4	10-3	9-8	7-10	7-8
	2-#6	40,000	14-1	16-9	13-0	13-5	12-2	10-1	9-6	7-0	6-10
		60,000	17-0	20-2	15-8	16-2	14-7	12-0	10-11	8-0	7-9
	Center distance[k, l]		4-9	6-8	4-0	4-4	3-6	2-5	2-2	1-5	1-4

(continued)

TABLE R611.8(5)—continued
MAXIMUM ALLOWABLE CLEAR SPANS FOR 10-INCH-NOMINAL THICK FLAT LINTELS IN LOAD-BEARING WALLS[a, b, c, d, e, f, m]
ROOF CLEAR SPAN 40 FEET AND FLOOR CLEAR SPAN 32 FEET

LINTEL DEPTH, D[g] (inches)	NUMBER OF BARS AND BAR SIZE IN TOP AND BOTTOM OF LINTEL	STEEL YIELD STRENGTH[h], f_y (psi)	DESIGN LOADING CONDITION DETERMINED FROM TABLE R611.8(1)								
			1	2		3		4		5	
			Maximum ground snow load (psf)								
			—	30	70	30	70	30	70	30	70
			Maximum clear span of lintel (feet - inches)								
20	Span without stirrups[i, j]		8-7	11-4	8-1	8-5	7-5	6-1	5-9	4-10	4-9
	1-#4	40,000	6-5	7-10	6-2	6-4	5-9	4-9	4-6	3-8	3-7
		60,000	7-10	9-7	7-6	7-9	7-0	5-10	5-6	4-5	4-4
	1-#5	40,000	8-0	9-9	7-8	7-11	7-2	5-11	5-7	4-6	4-5
		60,000	9-9	11-11	9-4	9-8	8-9	7-3	6-10	5-6	5-5
	2-#4 1-#6	40,000	9-0	11-1	8-8	8-11	8-1	6-9	6-4	5-2	5-0
		60,000	11-0	13-6	10-6	10-11	9-10	8-2	7-9	6-3	6-2
	2-#5	40,000	11-3	13-9	10-9	11-1	10-0	8-4	7-10	6-5	6-3
		60,000	15-8	19-2	15-0	15-6	14-0	11-8	11-0	8-11	8-9
	2-#6	40,000	15-5	18-10	14-8	15-2	13-9	11-5	10-9	8-6	8-3
		60,000	18-7	22-9	17-9	18-5	16-7	13-10	12-9	9-5	9-2
	Center distance A[k, l]		5-7	8-4	5-1	5-5	4-5	3-1	2-9	1-10	1-9
24	Span without stirrups[i, j]		9-11	13-7	9-9	10-2	9-0	7-5	7-0	5-10	5-9
	1-#5	40,000	8-6	10-8	8-5	8-8	7-10	6-6	6-2	5-0	4-11
		60,000	10-5	13-0	10-3	10-7	9-7	8-0	7-6	6-1	6-0
	2-#4 1-#6	40,000	9-7	12-1	9-6	9-9	8-10	7-5	7-0	5-8	5-6
		60,000	11-9	14-9	11-7	11-11	10-10	9-0	8-6	6-11	6-9
	2-#5	40,000	12-0	15-0	11-9	12-2	11-0	9-2	8-8	7-1	6-11
		60,000	14-7	18-3	14-4	14-10	13-5	11-2	10-7	8-7	8-5
	2-#6	40,000	14-3	17-11	14-1	14-7	13-2	11-0	10-4	8-5	8-3
		60,000	19-11	25-0	19-7	20-3	18-4	15-3	14-5	10-10	10-7
	Center distance A[k, l]		6-3	9-11	6-1	6-6	5-4	3-9	3-4	2-2	2-1

For SI: 1 inch = 25.4 mm, 1 foot = 304.8 mm, 1 pound per square foot = 0.0479 kPa, Grade 40 = 280 MPa, Grade 60 = 420 MPa.

Note: Top and bottom reinforcement for lintels without stirrups shown in shaded cells shall be equal to or greater than that required for lintel of the same depth and loading condition that has an allowable clear span that is equal to or greater than that of the lintel without stirrups.

a. See Table R611.3 for tolerances permitted from nominal thickness.

b. Table values are based on concrete with a minimum specified compressive strength of 2,500 psi. See Note j.

c. Table values are based on uniform loading. See Section R611.8.2 for lintels supporting concentrated loads.

d. Deflection criterion is $L/240$, where L is the clear span of the lintel in inches, or $^1/_2$-inch, whichever is less.

e. Linear interpolation is permitted between ground snow loads and between lintel depths.

f. DR indicates design required.

g. Lintel depth, D, is permitted to include the available height of wall located directly above the lintel, provided that the increased lintel depth spans the entire length of the lintel.

h. Stirrups shall be fabricated from reinforcing bars with the same yield strength as that used for the main longitudinal reinforcement.

i. Allowable clear span without stirrups applicable to all lintels of the same depth, D. Top and bottom reinforcement for lintels without stirrups shall not be less than the least amount of reinforcement required for a lintel of the same depth and loading condition with stirrups. All other spans require stirrups spaced at not more than $d/2$.

j. Where concrete with a minimum specified compressive strength of 3,000 psi is used, clear spans for lintels without stirrups shall be permitted to be multiplied by 1.05. If the increased span exceeds the allowable clear span for a lintel of the same depth and loading condition with stirrups, the top and bottom reinforcement shall be equal to or greater than that required for a lintel of the same depth and loading condition that has an allowable clear span that is equal to or greater than that of the lintel without stirrups that has been increased.

k. Center distance, A, is the center portion of the clear span where stirrups are not required. This is applicable to all longitudinal bar sizes and steel yield strengths.

l. Where concrete with a minimum specified compressive strength of 3,000 psi is used, center distance, A, shall be permitted to be multiplied by 1.10.

m. The maximum clear opening width between two solid wall segments shall be 18 feet. See Section R611.7.2.1. Lintel clear spans in the table greater than 18 feet are shown for interpolation and information only.

TABLE R611.8(6)
MAXIMUM ALLOWABLE CLEAR SPANS FOR 6-INCH-THICK WAFFLE-GRID LINTELS IN LOAD-BEARING WALLS[a, b, c, d, e, f, o]
MAXIMUM ROOF CLEAR SPAN 40 FEET AND MAXIMUM FLOOR SPAN 32 FEET

LINTEL DEPTH, D[g] (inches)	NUMBER OF BARS AND BAR SIZE IN TOP AND BOTTOM OF LINTEL	STEEL YIELD STRENGTH[h], f_y (psi)	DESIGN LOADING CONDITION DETERMINED FROM TABLE R611.8(1)								
			1	2		3		4		5	
			Maximum ground snow load (psf)								
			—	30	70	30	70	30	70	30	70
			Maximum clear span of lintel (feet - inches)								
8[i]	Span without stirrups[k, l]		2-7	2-9	2-0	2-1	2-0	2-0	2-0	2-0	2-0
	1-#4	40,000	5-2	5-5	4-0	4-3	3-7	3-3	2-11	2-4	2-3
		60,000	5-9	6-3	4-0	4-3	3-7	3-3	2-11	2-4	2-3
	1-#5	40,000	5-9	6-3	4-0	4-3	3-7	3-3	2-11	2-4	2-3
		60,000	5-9	6-3	4-0	4-3	3-7	3-3	2-11	2-4	2-3
	2-#4 1-#6	40,000	5-9	6-3	4-0	4-3	3-7	3-3	2-11	2-4	2-3
		60,000	DR	DR	DR	DR	DR	DR	DR	DR	DR
	Center distance $A^{m, n}$		0-9	0-10	0-6	0-6	0-5	0-5	0-4	STL	STL
12[i]	Span without stirrups[k, l]		2-11	3-1	2-6	2-7	2-5	2-4	2-3	2-1	2-0
	1-#4	40,000	5-9	6-2	4-8	4-10	4-4	4-1	3-9	3-2	3-1
		60,000	8-0	8-7	6-6	6-9	6-0	5-5	4-11	3-11	3-10
	1-#5	40,000	8-1	8-9	6-8	6-11	6-0	5-5	4-11	3-11	3-10
		60,000	9-1	10-3	6-8	7-0	6-0	5-5	4-11	3-11	3-10
	2-#4 1-#6	40,000	9-1	9-9	6-8	7-0	6-0	5-5	4-11	3-11	3-10
	Center distance $A^{m, n}$		1-3	1-5	0-10	0-11	0-9	0-8	0-6	STL	STL
	Span without stirrups[k, l]		4-0	4-4	3-6	3-7	3-4	3-3	3-1	2-10	2-10
16[i]	1-#4	40,000	6-7	7-3	5-6	5-9	5-2	4-10	4-6	3-9	3-8
		60,000	8-0	8-10	6-9	7-0	6-3	5-11	5-5	4-7	4-5
	1-#5	40,000	8-2	9-0	6-11	7-2	6-5	6-0	5-7	4-8	4-6
		60,000	11-5	12-6	9-3	9-9	8-4	7-7	6-10	5-6	5-4
	2-#4 1-#6	40,000	10-7	11-7	8-11	9-3	8-3	7-7	6-10	5-6	5-4
		60,000	12-2	14-0	9-3	9-9	8-4	7-7	6-10	5-6	5-4
	2-#5	40,000	12-2	14-2	9-3	9-9	8-4	7-7	6-10	5-6	5-4
		60,000	DR	DR	DR	DR	DR	DR	DR	DR	DR
	Center distance $A^{m, n}$		1-8	2-0	1-2	1-3	1-0	0-11	0-9	STL	STL
20[i]	Span without stirrups[k, l]		5-0	5-6	4-6	4-7	4-3	4-1	4-0	3-8	3-8
	1-#4	40,000	7-2	8-2	6-3	6-6	5-10	5-6	5-1	4-3	4-2
		60,000	8-11	9-11	7-8	7-11	7-1	6-8	6-2	5-2	5-0
	1-#5	40,000	9-1	10-2	7-9	8-1	7-3	6-10	6-4	5-4	5-2
		60,000	12-8	14-2	10-11	11-3	10-2	9-6	8-9	7-1	6-10
	2-#4 1-#6	40,000	10-3	11-5	8-9	9-1	8-2	7-8	7-1	6-0	5-10
		60,000	14-3	15-11	11-9	12-5	10-8	9-9	8-9	7-1	6-10
	2-#5	40,000	14-6	16-3	11-6	12-1	10-4	9-6	8-6	6-11	6-8
		60,000	DR	DR	DR	DR	DR	DR	DR	DR	DR
	Center distance $A^{m, n}$		2-0	2-6	1-6	1-7	1-3	1-1	1-0	STL	STL

(continued)

TABLE R611.8(6)—continued
MAXIMUM ALLOWABLE CLEAR SPANS FOR 6-INCH-THICK WAFFLE-GRID LINTELS IN LOAD-BEARING WALLS[a, b, c, d, e, f, o]
MAXIMUM ROOF CLEAR SPAN 40 FEET AND MAXIMUM FLOOR SPAN 32 FEET

LINTEL DEPTH, D[g] (inches)	NUMBER OF BARS AND BAR SIZE IN TOP AND BOTTOM OF LINTEL	STEEL YIELD STRENGTH[h], f_y (psi)	DESIGN LOADING CONDITION DETERMINED FROM TABLE R611.8(1)								
			1	2		3		4		5	
			Maximum ground snow load (psf)								
			—	30	70	30	70	30	70	30	70
			Maximum clear span of lintel (feet - inches)								
24w[j]	Span without stirrups[k, l]		6-0	6-8	5-5	5-7	5-3	5-0	4-10	4-6	4-5
	1-#4	40,000	7-11	9-0	6-11	7-2	6-5	6-0	5-7	4-8	4-7
		60,000	9-8	10-11	8-5	8-9	7-10	7-4	6-10	5-9	5-7
	1-#5	40,000	9-10	11-2	8-7	8-11	8-0	7-6	7-0	5-10	5-8
		60,000	12-0	13-7	10-6	10-10	9-9	9-2	8-6	7-2	6-11
	2-#4 1-#6	40,000	11-1	12-7	9-8	10-1	9-1	8-6	7-10	6-7	6-5
		60,000	15-6	17-7	13-6	14-0	12-8	11-10	10-8	8-7	8-4
	2-#5	40,000	15-6	17-11	12-8	13-4	11-6	10-7	9-7	7-10	7-7
		60,000	DR	DR	DR	DR	DR	DR	DR	DR	DR
	Center distance A[m, n]		2-4	3-0	1-9	1-11	1-6	1-4	1-2	STL	STL

For SI: 1 inch = 25.4 mm, 1 pound per square foot = 0.0479 kPa, 1 foot = 304.8 mm, Grade 40 = 280 MPa, Grade 60 = 420 MPa.

a. Where lintels are formed with waffle-grid forms, form material shall be removed, if necessary, to create top and bottom flanges of the lintel that are not less than 3 inches in depth (in the vertical direction), are not less than 5 inches in width for 6-inch-nominal waffle-grid forms and not less than 7 inches in width for 8-inch-nominal waffle-grid forms. See Figure R611.8(3). Flat form lintels shall be permitted in place of waffle-grid lintels. See Tables R611.8(2) through R611.8(5).

b. See Table R611.3 for tolerances permitted from nominal thicknesses and minimum dimensions and spacing of cores.

c. Table values are based on concrete with a minimum specified compressive strength of 2,500 psi. See Notes l and n. Table values are based on uniform loading. See Section R611.8.2 for lintels supporting concentrated loads.

d. Deflection criterion is $L/240$, where L is the clear span of the lintel in inches, or $^1/_2$-inch, whichever is less.

e. Linear interpolation is permitted between ground snow loads.

f. DR indicates design required. STL - stirrups required throughout lintel.

g. Lintel depth, D, is permitted to include the available height of wall located directly above the lintel, provided that the increased lintel depth spans the entire length of the lintel.

h. Stirrups shall be fabricated from reinforcing bars with the same yield strength as that used for the main longitudinal reinforcement.

i. Lintels less than 24 inches in depth with stirrups shall be formed from flat-walls forms [see Tables R611.8(2) through R611.8(5)], or, if necessary, form material shall be removed from waffle-grid forms so as to provide the required cover for stirrups. Allowable spans for lintels formed with flat-wall forms shall be determined from Tables R611.8(2) through R611.8(5).

j. Where stirrups are required for 24-inch deep lintels, the spacing shall not exceed 12 inches on center.

k. Allowable clear span without stirrups applicable to all lintels of the same depth, D. Top and bottom reinforcement for lintels without stirrups shall not be less than the least amount of reinforcement required for a lintel of the same depth and loading condition with stirrups. All other spans require stirrups spaced at not more than $d/2$.

l. Where concrete with a minimum specified compressive strength of 3,000 psi is used, clear spans for lintels without stirrups shall be permitted to be multiplied by 1.05. If the increased span exceeds the allowable clear span for a lintel of the same depth and loading condition with stirrups, the top and bottom reinforcement shall be equal to or greater than that required for a lintel of the same depth and loading condition that has an allowable clear span that is equal to or greater than that of the lintel without stirrups that has been increased.

m. Center distance, A, is the center portion of the span where stirrups are not required. This is applicable to all longitudinal bar sizes and steel yield strengths.

n. Where concrete with a minimum specified compressive strength of 3,000 psi is used, center distance, A, shall be permitted to be multiplied by 1.10.

o. The maximum clear opening width between two solid wall segments shall be 18 feet. See Section R611.7.2.1. Lintel spans in the table greater than 18 feet are shown for interpolation and information only.

TABLE R611.8(7)
MAXIMUM ALLOWABLE CLEAR SPANS FOR 8-INCH-THICK WAFFLE-GRID LINTELS IN LOAD-BEARING WALLS[a, b, c, d, e, f, o]
MAXIMUM ROOF CLEAR SPAN 40 FEET AND MAXIMUM FLOOR CLEAR SPAN 32 FEET

LINTEL DEPTH, D[g] (inches)	NUMBER OF BARS AND BAR SIZE IN TOP AND BOTTOM OF LINTEL	STEEL YIELD STRENGTH[h], f_y (psi)	DESIGN LOADING CONDITION DETERMINED FROM TABLE R611.8(1)							
			1	2		3		4		5	
				Maximum ground snow load (psf)							
				30	70	30	70	30	70	30	70
			Maximum clear span of lintel (feet - inches)								
8[i]	Span with stirrups[k, l]		2-6	2-9	2-0	2-1	2-0	2-0	2-0	2-0	2-0
	1-#4	40,000	4-5	4-9	3-7	3-9	3-4	3-0	2-10	2-3	2-2
		60,000	5-6	6-2	4-0	4-3	3-7	3-1	2-10	2-3	2-2
	1-#5	40,000	5-6	6-2	4-0	4-3	3-7	3-1	2-10	2-3	2-2
	Center distance A[m, n]		0-9	0-10	0-6	0-6	0-5	0-4	0-4	STL	STL
12[i]	Span without stirrups[k, l]		2-10	3-1	2-6	2-7	2-5	2-3	2-2	2-0	2-0
	1-#4	40,000	5-7	6-1	4-8	4-10	4-4	3-11	3-8	3-0	2-11
		60,000	6-9	7-5	5-8	5-11	5-4	4-9	4-5	3-8	3-7
	1-#5	40,000	6-11	7-7	5-10	6-0	5-5	4-10	4-6	3-9	3-7
		60,000	8-8	10-1	6-7	7-0	5-11	5-2	4-8	3-9	3-7
	2-#4 1-#6	40,000	8-8	9-10	6-7	7-0	5-11	5-2	4-8	3-9	3-7
		60,000	8-8	10-1	6-7	7-0	5-11	5-2	4-8	3-9	3-7
	Center distance A[m, n]		1-2	1-5	0-10	0-11	0-9	0-7	0-6	STL	STL
16[i]	Span without stirrups[k, l]		3-10	4-3	3-6	3-7	3-4	3-2	3-0	2-10	2-9
	1-#4	40,000	6-5	7-2	5-6	5-9	5-2	4-8	4-4	3-7	3-6
		60,000	7-9	8-9	6-9	7-0	6-3	5-8	5-3	4-4	4-3
	1-#5	40,000	7-11	8-11	6-10	7-1	6-5	5-9	5-4	4-5	4-4
		60,000	9-8	10-11	8-4	8-8	7-10	7-0	6-6	5-2	5-1
	2-#4 1-#6	40,000	9-0	10-1	7-9	8-0	7-3	6-6	6-1	5-0	4-11
		60,000	11-5	13-10	9-2	9-8	8-3	7-2	6-6	5-2	5-1
	Center distance A[m, n]		1-6	1-11	1-2	1-3	1-0	0-10	0-8	STL	STL
20[i]	Span without stirrups[k, l]		4-10	5-5	4-5	4-7	4-3	4-0	3-11	3-7	3-7
	1-#4	40,000	7-0	8-1	6-3	6-5	5-10	5-3	4-11	4-1	3-11
		60,000	8-7	9-10	7-7	7-10	7-1	6-5	6-0	4-11	4-10
	1-#5	40,000	8-9	10-1	7-9	8-0	7-3	6-6	6-1	5-1	4-11
		60,000	10-8	12-3	9-6	9-10	8-10	8-0	7-5	6-2	6-0
	2-#4 1-#6	40,000	9-10	11-4	8-9	9-1	8-2	7-4	6-10	5-8	5-7
		60,000	12-0	13-10	10-8	11-0	9-11	9-0	8-4	6-8	6-6
	2-#5	40,000	12-3	14-1	10-10	11-3	10-2	8-11	8-1	6-6	6-4
		60,000	14-0	17-6	11-8	12-3	10-6	9-1	8-4	6-8	6-6
	Center distance A[m, n]		1-10	2-5	1-5	1-7	1-3	1-0	0-11	STL	STL

(continued)

TABLE R611.8(7)—continued
MAXIMUM ALLOWABLE CLEAR SPANS FOR 8-INCH-THICK WAFFLE-GRID LINTELS IN LOAD-BEARING WALLS[a, b, c, d, e, f, o]
MAXIMUM ROOF CLEAR SPAN 40 FEET AND MAXIMUM FLOOR CLEAR SPAN 32 FEET

LINTEL DEPTH, D[g] (inches)	NUMBER OF BARS AND BAR SIZE IN TOP AND BOTTOM OF LINTEL	STEEL YIELD STRENGTH[h], f_y (psi)	DESIGN LOADING CONDITION DETERMINED FROM TABLE R611.8(1)								
			1	2		3		4		5	
				Maximum ground snow load (psf)							
				30	70	30	70	30	70	30	70
			Maximum clear span of lintel (feet - inches)								
24[j]	Span without stirrups[k, l]		5-9	6-7	5-5	5-6	5-2	4-11	4-9	4-5	4-4
	1-#4	40,000	7-6	8-10	6-10	7-1	6-5	5-9	5-5	4-6	4-4
		60,000	9-2	10-9	8-4	8-8	7-10	7-1	6-7	5-6	5-4
	1-#5	40,000	9-5	11-0	8-6	8-10	8-0	7-2	6-8	5-7	5-5
		60,000	11-5	13-5	10-5	10-9	9-9	8-9	8-2	6-10	6-8
	2-#4 1-#6	40,000	10-7	12-5	9-8	10-0	9-0	8-1	7-7	6-3	6-2
		60,000	12-11	15-2	11-9	12-2	11-0	9-11	9-3	7-8	7-6
	2-#5	40,000	13-2	15-6	12-0	12-5	11-2	9-11	9-2	7-5	7-3
		60,000	16-3	21-0	14-1	14-10	12-9	11-1	10-1	8-1	7-11
	2-#6	40,000	14-4	18-5	12-6	13-2	11-5	9-11	9-2	7-5	7-3
	Center distance A[m, n]		2-1	2-11	1-9	1-10	1-6	1-3	1-1	STL	STL

For SI: 1 inch = 25.4 mm, 1 pound per square foot = 0.0479 kPa, 1 foot = 304.8 mm, Grade 40 = 280 MPa, Grade 60 = 420 MPa.

a. Where lintels are formed with waffle-grid forms, form material shall be removed, if necessary, to create top and bottom flanges of the lintel that are not less than 3 inches in depth (in the vertical direction), are not less than 5 inches in width for 6-inch-nominal waffle-grid forms and not less than 7 inches in width for 8-inch-nominal waffle-grid forms. See Figure R611.8(3). Flat form lintels shall be permitted in lieu of waffle-grid lintels. See Tables R611.8(2) through R611.8(5).

b. See Table R611.3 for tolerances permitted from nominal thicknesses and minimum dimensions and spacing of cores.

c. Table values are based on concrete with a minimum specified compressive strength of 2,500 psi. See Notes l and n. Table values are based on uniform loading. See Section R611.8.2 for lintels supporting concentrated loads.

d. Deflection criterion is $L/240$, where L is the clear span of the lintel in inches, or $^1/_2$-inch, whichever is less.

e. Linear interpolation is permitted between ground snow loads.

f. DR indicates design required. STL - stirrups required throughout lintel.

g. Lintel depth, D, is permitted to include the available height of wall located directly above the lintel, provided that the increased lintel depth spans the entire length of the lintel.

h. Stirrups shall be fabricated from reinforcing bars with the same yield strength as that used for the main longitudinal reinforcement.

i. Lintels less than 24 inches in depth with stirrups shall be formed from flat-walls forms [see Tables R611.8(2) through R611.8(5)], or, if necessary, form material shall be removed from waffle-grid forms so as to provide the required cover for stirrups. Allowable spans for lintels formed with flat-wall forms shall be determined from Tables R611.8(2) through R611.8(5).

j. Where stirrups are required for 24-inch deep lintels, the spacing shall not exceed 12 inches on center.

k. Allowable clear span without stirrups applicable to all lintels of the same depth, D. Top and bottom reinforcement for lintels without stirrups shall not be less than the least amount of reinforcement required for a lintel of the same depth and loading condition with stirrups. All other spans require stirrups spaced at not more than $d/2$.

l. Where concrete with a minimum specified compressive strength of 3,000 psi is used, clear spans for lintels without stirrups shall be permitted to be multiplied by 1.05. If the increased span exceeds the allowable clear span for a lintel of the same depth and loading condition with stirrups, the top and bottom reinforcement shall be equal to or greater than that required for a lintel of the same depth and loading condition that has an allowable clear span that is equal to or greater than that of the lintel without stirrups that has been increased.

m. Center distance, A, is the center portion of the span where stirrups are not required. This is applicable to all longitudinal bar sizes and steel yield strengths.

n. Where concrete with a minimum specified compressive strength of 3,000 psi is used, center distance, A, shall be permitted to be multiplied by 1.10.

o. The maximum clear opening width between two solid wall segments shall be 18 feet. See Section R611.7.2.1. Lintel spans in the table greater than 18 feet are shown for interpolation and information only.

TABLE R611.8(8)
MAXIMUM ALLOWABLE CLEAR SPANS FOR 6-INCH-THICK SCREEN-GRID LINTELS IN LOAD-BEARING WALLS[a, b, c, d, e, f, p]
ROOF CLEAR SPAN 40 FEET AND FLOOR CLEAR SPAN 32 FEET

LINTEL DEPTH, D[g] (inches)	NUMBER OF BARS AND BAR SIZE IN TOP AND BOTTOM OF LINTEL	STEEL YIELD STRENGTH[h], f_y (psi)	DESIGN LOADING CONDITION DETERMINED FROM TABLE R611.8(1)								
			1	2		3		4		5	
				Maximum ground snow load (psf)							
				30	70	30	70	30	70	30	70
			Maximum clear span of lintel (feet - inches)								
12[i,j]	Span without stirrups		2-9	2-11	2-4	2-5	2-3	2-3	2-2	2-0	2-0
16[i,j]	Span without stirrups		3-9	4-0	3-4	3-5	3-2	3-1	3-0	2-9	2-9
20[i,j]	Span without stirrups		4-9	5-1	4-3	4-4	4-1	4-0	3-10	3-7	3-7
24[k]	Span without stirrups[l, m]		5-8	6-3	5-2	5-3	5-0	4-10	4-8	4-4	4-4
	1-#4	40,000	7-11	9-0	6-11	7-2	6-5	6-1	5-8	4-9	4-7
		60,000	9-9	11-0	8-5	8-9	7-10	7-5	6-10	5-9	5-7
	1-#5	40,000	9-11	11-2	8-7	8-11	8-0	7-7	7-0	5-11	5-9
		60,000	12-1	13-8	10-6	10-10	9-9	9-3	8-6	7-2	7-0
	2-#4 1-#6	40,000	11-2	12-8	9-9	10-1	9-1	8-7	7-11	6-8	6-6
		60,000	15-7	17-7	12-8	13-4	11-6	10-8	9-8	7-11	7-8
	2-#5	40,000	14-11	18-0	12-2	12-10	11-1	10-3	9-4	7-8	7-5
		60,000	DR	DR	DR	DR	DR	DR	DR	DR	DR
	Center distance A[n, o]		2-0	2-6	1-6	1-7	1-4	1-2	1-0	STL	STL

For SI: 1 inch = 25.4 mm, 1 pound per square foot = 0.0479 kPa, 1 foot = 304.8 mm, Grade 40 = 280 MPa, Grade 60 = 420 MPa.

a. Where lintels are formed with screen-grid forms, form material shall be removed if necessary to create top and bottom flanges of the lintel that are not less than 5 inches in width and not less than 2.5 inches in depth (in the vertical direction). See Figure R611.8(4). Flat form lintels shall be permitted in lieu of screen-grid lintels. See Tables R611.8(2) through R611.8(5).

b. See Table R611.3 for tolerances permitted from nominal thickness and minimum dimensions and spacings of cores.

c. Table values are based on concrete with a minimum specified compressive strength of 2,500 psi. See Notes m and o. Table values are based on uniform loading. See Section R611.7.2.1 for lintels supporting concentrated loads.

d. Deflection criterion is $L/240$, where L is the clear span of the lintel in inches, or $^1/_2$-inch, whichever is less.

e. Linear interpolation is permitted between ground snow loads.

f. DR indicates design required. STL indicates stirrups required throughout lintel.

g. Lintel depth, D, is permitted to include the available height of wall located directly above the lintel, provided that the increased lintel depth spans the entire length of the lintel.

h. Stirrups shall be fabricated from reinforcing bars with the same yield strength as that used for the main longitudinal reinforcement.

i. Stirrups are not required for lintels less than 24 inches in depth fabricated from screen-grid forms. Top and bottom reinforcement shall consist of a No. 4 bar having a yield strength of 40,000 psi or 60,000 psi.

j. Lintels between 12 and 24 inches in depth with stirrups shall be formed from flat-wall forms [see Tables R611.8(2) through R611.8(5)], or form material shall be removed from screen-grid forms to provide a concrete section comparable to that required for a flat wall. Allowable spans for flat lintels with stirrups shall be determined from Tables R611.8(2) through R6111.8(5).

k. Where stirrups are required for 24-inch deep lintels, the spacing shall not exceed 12 inches on center.

l. Allowable clear span without stirrups applicable to all lintels of the same depth, D. Top and bottom reinforcement for lintels without stirrups shall not be less than the least amount of reinforcement required for a lintel of the same depth and loading condition with stirrups. All other spans require stirrups spaced at not more than 12 inches.

m. Where concrete with a minimum specified compressive strength of 3,000 psi is used, clear spans for lintels without stirrups shall be permitted to be multiplied by 1.05. If the increased span exceeds the allowable clear span for a lintel of the same depth and loading condition with stirrups, the top and bottom reinforcement shall be equal to or greater than that required for a lintel of the same depth and loading condition that has an allowable clear span that is equal to or greater than that of the lintel without stirrups that has been increased.

n. Center distance, A, is the center portion of the span where stirrups are not required. This is applicable to all longitudinal bar sizes and steel yield strengths.

o. Where concrete with a minimum specified compressive strength of 3,000 psi is used, center distance, A, shall be permitted to be multiplied by 1.10.

p. The maximum clear opening width between two solid wall segments shall be 18 feet. See Section R611.7.2.1. Lintel spans in the table greater than 18 feet are shown for interpolation and information only.

TABLE R611.8(9)
MAXIMUM ALLOWABLE CLEAR SPANS FOR FLAT LINTELS WITHOUT STIRRUPS IN NONLOAD-BEARING WALLS[a, b, c, d, e, g, h]

LINTEL DEPTH, D^1 (inches)	NUMBER OF BARS AND BAR SIZE	STEEL YIELD STRENGTH, f_y (psi)	NOMINAL WALL THICKNESS (inches)							
			4		6		8		10	
			Lintel Supporting							
			Concrete Wall	Light-framed Gable	Concrete Wall	Light-framed Gable	Concrete Wall	Light-framed Gable	Concrete Wall	Light-framed Gable
			Maximum Clear Span of Lintel (feet - inches)							
8	1-#4	40,000	10-11	11-5	9-7	11-2	7-10	9-5	7-3	9-2
		60,000	12-5	11-7	10-11	13-5	9-11	13-2	9-3	12-10
	1-#5	40,000	12-7	11-7	11-1	13-8	10-1	13-5	9-4	13-1
		60,000	DR	DR	12-7	16-4	11-6	14-7	10-9	14-6
	2-#4 1-#6	40,000	DR	DR	12-0	15-3	10-11	15-0	10-2	14-8
		60,000	DR	DR	DR	DR	12-2	15-3	11-7	15-3
	2-#5	40,000	DR	DR	DR	DR	12-7	16-7	11-9	16-7
		60,000	DR	DR	DR	DR	DR	DR	13-3	16-7
	2-#6	40,000	DR	DR	DR	DR	DR	DR	13-2	17-8
		60,000	DR	DR	DR	DR	DR	DR	DR	DR
12	1-#4	40,000	11-5	9-10	10-6	12-0	9-6	11-6	8-9	11-1
		60,000	11-5	9-10	11-8	13-3	10-11	14-0	10-1	13-6
	1-#5	40,000	11-5	9-10	11-8	13-3	11-1	14-4	10-3	13-9
		60,000	11-5	9-10	11-8	13-3	11-10	16-0	11-9	16-9
	2-#4 1-#6	40,000	DR	DR	11-8	13-3	11-10	16-0	11-2	15-6
		60,000	DR	DR	11-8	13-3	11-10	16-0	11-11	18-4
	2-#5	40,000	DR	DR	11-8	13-3	11-10	16-0	11-11	18-4
		60,000	DR	DR	11-8	13-3	11-10	16-0	11-11	18-4
16	1-#4	40,000	13-6	13-0	11-10	13-8	10-7	12-11	9-11	12-4
		60,000	13-6	13-0	13-8	16-7	12-4	15-9	11-5	15-0
	1-#5	40,000	13-6	13-0	13-10	17-0	12-6	16-1	11-7	15-4
		60,000	13-6	13-0	13-10	17-1	14-0	19-7	13-4	18-8
	2-#4 1-#6	40,000	13-6	13-0	13-10	17-1	13-8	18-2	12-8	17-4
		60,000	13-6	13-0	13-10	17-1	14-0	20-3	14-1	—
	2-#5	40,000	13-6	13-0	13-10	17-1	14-0	20-3	14-1	—
		60,000	DR	DR	13-10	17-1	14-0	20-5	14-11	—
20	1-#4	40,000	14-11	15-10	13-0	14-10	11-9	13-11	10-10	13-2
		60,000	15-3	15-10	14-11	18-1	13-6	17-0	12-6	16-2
	1-#5	40,000	15-3	15-10	15-2	18-6	13-9	17-5	12-8	16-6
		60,000	15-3	15-10	15-8	20-5	15-9	—	14-7	20-1
	2-#4 1-#6	40,000	15-3	15-10	15-8	20-5	14-11	—	13-10	—
		60,000	15-3	15-10	15-8	20-5	15-10	—	15-11	—
	2-#5	40,000	15-3	15-10	15-8	20-5	15-10	—	15-11	—
		60,000	15-3	15-10	15-8	20-5	15-10	—	15-11	—

(continued)

TABLE R611.8(9)—continued
MAXIMUM ALLOWABLE CLEAR SPANS FOR FLAT LINTELS WITHOUT STIRRUPS IN NONLOAD-BEARING WALLS[a, b, c, d, e, g, h]

LINTEL DEPTH, D^f (inches)	NUMBER OF BARS AND BAR SIZE	STEEL YIELD STRENGTH, f_y (psi)	NOMINAL WALL THICKNESS (inches)							
			4		6		8		10	
			Lintel Supporting							
			Concrete Wall	Light-framed Gable	Concrete Wall	Light-framed Gable	Concrete Wall	Light-framed Gable	Concrete Wall	Light-framed Gable
			Maximum Clear Span of Lintel (feet - inches)							
24	1-#4	40,000	16-1	17-1	13-11	15-10	12-7	14-9	11-8	13-10
		60,000	16-11	18-5	16-1	19-3	14-6	18-0	13-5	17-0
	1-#5	40,000	16-11	18-5	16-3	19-8	14-9	18-5	13-8	17-4
		60,000	16-11	18-5	17-4	—	17-0	—	15-8	—
	2-#4 1-#6	40,000	16-11	18-5	17-4	—	16-1	—	14-10	—
		60,000	16-11	18-5	17-4	—	17-6	—	17-1	—
	2-#5	40,000	16-11	18-5	17-4	—	17-6	—	17-4	—
		60,000	16-11	18-5	17-4	—	17-6	—	17-8	—

For SI: 1 inch = 25.4 mm, 1 foot = 304.8 mm, Grade 40 = 280 MPa, Grade 60 = 420 MPa.

a. See Table R611.3 for tolerances permitted from nominal thickness.

b. Table values are based on concrete with a minimum specified compressive strength of 2,500 psi. See Note e.

c. Deflection criterion is $L/240$, where L is the clear span of the lintel in inches, or $^1/_2$ inch, whichever is less.

d. Linear interpolation between lintels depths, D, is permitted provided the two cells being used to interpolate are shaded.

e. Where concrete with a minimum specified compressive strength of 3,000 psi is used, spans in cells that are shaded shall be permitted to be multiplied by 1.05.

f. Lintel depth, D, is permitted to include the available height of wall located directly above the lintel, provided that the increased lintel depth spans the entire length of the lintel.

g. DR indicates design required.

h. The maximum clear opening width between two solid wall segments shall be 18 feet. See Section R611.7.2.1. Lintel spans in the table greater than 18 feet are shown for interpolation and information purposes only.

TABLE R611.8(10)
MAXIMUM ALLOWABLE CLEAR SPANS FOR WAFFLE-GRID AND SCREEN-GRID LINTELS WITHOUT STIRRUPS IN NONLOAD-BEARING WALLS[c, d, e, f, g]

LINTEL DEPTH[h], D (inches)	FORM TYPE AND NOMINAL WALL THICKNESS (inches)					
	6-inch Waffle-grid[a]		8-inch Waffle-grid[a]		6-inch Screen-grid[b]	
	Lintel supporting					
	Concrete Wall	Light-framed Gable	Concrete Wall	Light-framed Gable	Concrete Wall	Light-framed Gable
	Maximum Clear Span of Lintel (feet - inches)					
8	10-3	8-8	8-8	8-3	—	—
12	9-2	7-6	7-10	7-1	8-8	6-9
16	10-11	10-0	9-4	9-3	—	—
20	12-5	12-2	10-7	11-2	—	—
24	13-9	14-2	11-10	12-11	13-0	12-9

For SI: 1 inch = 25.4 mm, 1 foot = 304.8 mm, Grade 40 = 280 MPa, Grade 60 = 420 MPa.

a. Where lintels are formed with waffle-grid forms, form material shall be removed, if necessary, to create top and bottom flanges of the lintel that are not less than 3 inches in depth (in the vertical direction), are not less than 5 inches in width for 6-inch waffle-grid forms and not less than 7 inches in width for 8-inch waffle-grid forms. See Figure R611.8(3). Flat form lintels shall be permitted in lieu of waffle-grid lintels. See Tables R611.8(2) through R611.8(5).

b. Where lintels are formed with screen-grid forms, form material shall be removed if necessary to create top and bottom flanges of the lintel that are not less than 5 inches in width and not less than 2.5 inches in depth (in the vertical direction). See Figure R611.8(4). Flat form lintels shall be permitted in lieu of screen-grid lintels. See Tables R611.8(2) through R611.8(5).

c. See Table R611.3 for tolerances permitted from nominal thickness and minimum dimensions and spacing of cores.

d. Table values are based on concrete with a minimum specified compressive strength of 2,500 psi. See Note g.

e. Deflection criterion is $L/240$, where L is the clear span of the lintel in inches, or $^1/_2$-inch, whichever is less.

f. Top and bottom reinforcement shall consist of a No. 4 bar having a minimum yield strength of 40,000 psi.

g. Where concrete with a minimum specified compressive strength of 3,000 psi is used, spans in shaded cells shall be permitted to be multiplied by 1.05.

h. Lintel depth, D, is permitted to include the available height of wall located directly above the lintel, provided that the increased lintel depth spans the entire length of the lintel.

R611.8.2.1 Lintels designed for gravity load-bearing conditions. Where a lintel will be subjected to gravity load condition 1 through 5 of Table R611.8(1), the clear span of the lintel shall not exceed that permitted by Tables R611.8(2) through R611.8(8). The maximum clear span of lintels with and without stirrups in flat walls shall be determined in accordance with Tables R611.8(2) through R611.8(5), and constructed in accordance with Figure R611.8(2). The maximum clear span of lintels with and without stirrups in waffle-grid walls shall be determined in accordance with Tables R611.8(6) and R611.8(7), and constructed in accordance with Figure R611.8(3). The maximum clear span of lintels with and without stirrups in screen-grid walls shall be determined in accordance with Table R611.8(8), and constructed in accordance with Figure R611.8(4).

Where required by the applicable table, No. 3 stirrups shall be installed in lintels at a maximum spacing of *d/2* where d equals the depth of the lintel, *D*, less the cover of the concrete as shown in Figures R611.8(2) through R611.8(4). The smaller value of *d* computed for the top and bottom bar shall be used to determine the maximum stirrup spacing. Where stirrups are required in a lintel with a single bar or two bundled bars in the top and bottom, they shall be fabricated like the letter "c" or "s" with 135-degree (2.36 rad) standard hooks at each end that comply with Section R611.5.4.5 and Figure R611.5.4(3) and installed as shown in Figures R611.8(2) through R611.8(4). Where two bars are required in the top and bottom of the lintel and the bars are not bundled, the bars shall be separated by a minimum of 1 inch (25 mm). The free end of the stirrups shall be fabricated with 90- or 135-degree (1.57 or 2.36 rad) standard hooks that comply with Section R611.5.4.5 and Figure R611.5.4(3) and installed as shown in Figures R611.8(2) and R611.8(3). For flat, waffle-grid and screen-grid lintels, stirrups are not required in the center distance, A, portion of spans in accordance with Figure R611.8(1) and Tables R611.8(2) through R611.8(8). See Section R611.8.2.2, Item 5, for requirement for stirrups through out lintels with bundled bars.

R611.8.2.2 Bundled bars in lintels. It is permitted to bundle two bars in contact with each other in lintels if all of the following are observed:

1. Bars no larger than No. 6 are bundled.
2. Where the wall thickness is not sufficient to provide not less than 3 inches (76 mm) of clear space beside bars (total on both sides) oriented horizontally in a bundle, the bundled bars shall be oriented in a vertical plane.
3. Where vertically oriented bundled bars terminate with standard hooks to develop the bars in tension beyond the support (see Section R611.5.4.4), the hook extensions shall be staggered to provide a minimum of 1 inch (25 mm) clear spacing between the extensions.
4. Bundled bars shall not be lap spliced within the lintel span and the length on each end of the lintel that is required to develop the bars in tension.
5. Bundled bars shall be enclosed within stirrups throughout the length of the lintel. Stirrups and the installation thereof shall comply with Section R611.8.2.1.

R611.8.2.3 Lintels without stirrups designed for nonload-bearing conditions. The maximum clear span of lintels without stirrups designed for nonload-bearing conditions of Table R611.8(1).1 shall be determined in accordance with this section. The maximum clear span of lintels without stirrups in flat walls shall be determined in accordance with Table R611.8(9), and the maximum clear span of lintels without stirrups in walls of waffle-grid or screen-grid construction shall be determined in accordance with Table R611.8(10).

R611.9 Requirements for connections–general. Concrete walls shall be connected to footings, floors, ceilings and roofs in accordance with this section.

R611.9.1 Connections between concrete walls and light-framed floor, ceiling and roof systems. Connections between concrete walls and light-framed floor, ceiling and roof systems using the prescriptive details of Figures R611.9(1) through R611.9(12) shall comply with this section and Sections R611.9.2 and R611.9.3.

R611.9.1.1 Anchor bolts. Anchor bolts used to connect light-framed floor, ceiling and roof systems to concrete walls in accordance with Figures R611.9(1) through R611.9(12) shall have heads, or shall be rods with threads on both ends with a hex or square nut on the end embedded in the concrete. Bolts and threaded rods shall comply with Section R611.5.2.2. Anchor bolts with J- or L-hooks shall not be used where the connection details in these figures are used.

R611.9.1.2 Removal of stay-in-place form material at bolts. Holes in stay-in-place forms for installing bolts for attaching face-mounted wood ledger boards to the wall shall be a minimum of 4 inches (102 mm) in diameter for forms not greater than $1^1/_2$ inches (38 mm) in thickness, and increased 1 inch (25 mm) in diameter for each $^1/_2$-inch (13 mm) increase in form thickness. Holes in stay-in-place forms for installing bolts for attaching face-mounted cold-formed steel tracks to the wall shall be a minimum of 4 inches (102 mm) square. The wood ledger board or steel track shall be in direct contact with the concrete at each bolt location.

Exception: A vapor retarder or other material less than or equal to $^1/_{16}$ inch (1.6 mm) in thickness is permitted to be installed between the wood ledger or cold-formed track and the concrete.

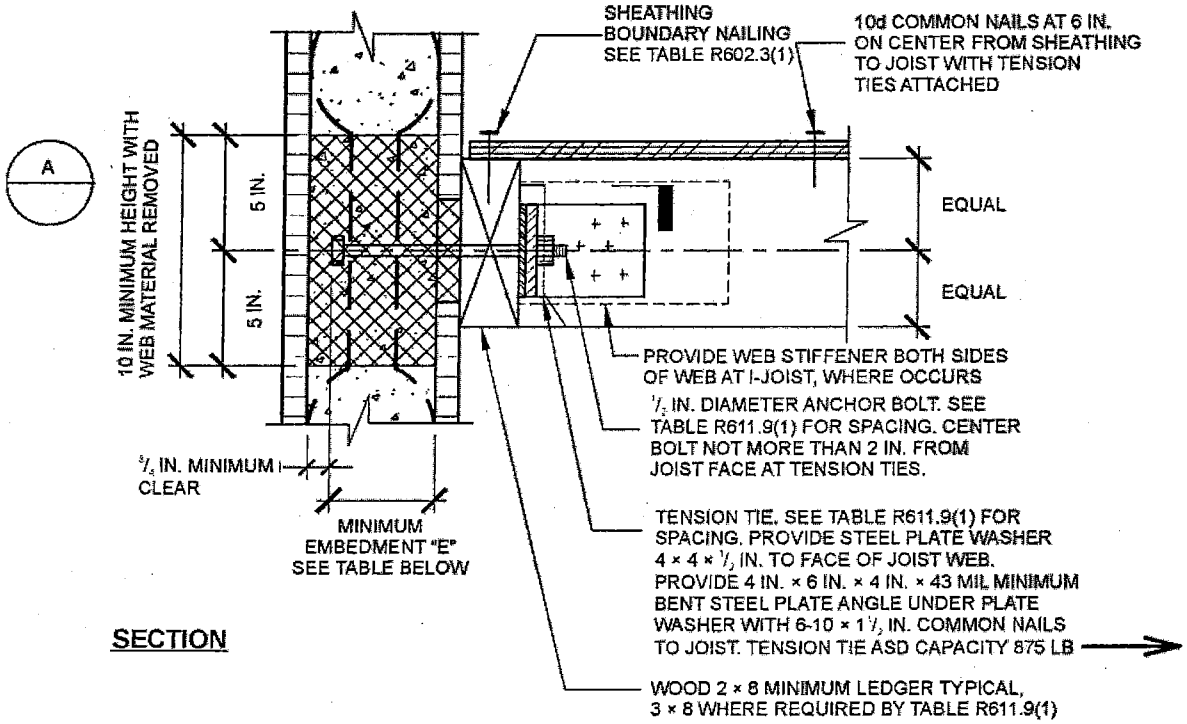

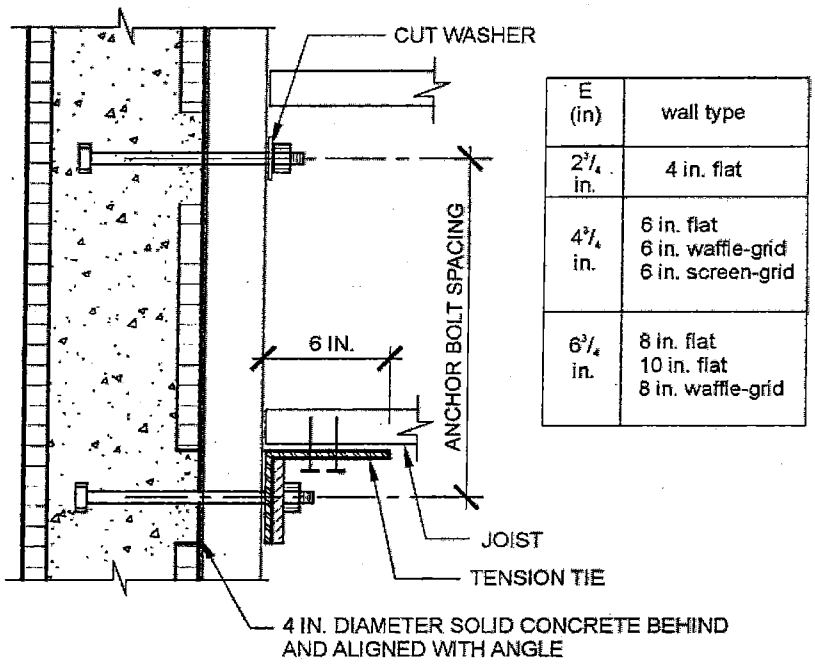

E (in)	wall type
2 3/4 in.	4 in. flat
4 3/4 in.	6 in. flat 6 in. waffle-grid 6 in. screen-grid
6 3/4 in.	8 in. flat 10 in. flat 8 in. waffle-grid

For SI: 1 mil = 0.0254 mm, 1 inch = 25.4 mm, 1 pound-force = 4.448 N.

FIGURE R611.9(1)
WOOD-FRAMED FLOOR TO SIDE OF CONCRETE WALL, FRAMING PERPENDICULAR

R611.9.2 Connections between concrete walls and light-framed floor systems. Connections between concrete walls and light-framed floor systems shall be in accordance with one of the following:

1. For floor systems of wood frame construction, the provisions of Section R611.9.1 and the prescriptive details of Figures R611.9(1) through R611.9(4), where permitted by the tables accompanying those figures. Portions of connections of wood-framed floor systems not noted in the figures shall be in accordance with Section R502, or AF&PA/WFCM, if applicable.
2. For floor systems of cold-formed steel construction, the provisions of Section R611.9.1 and the prescriptive details of Figures R611.9(5) through R611.9(8), where permitted by the tables accompanying those figures. Portions of connections of cold-formed-steel framed floor systems not noted in the figures shall be in accordance with Section R505, or AISI S230, if applicable.
3. Proprietary connectors selected to resist loads and load combinations in accordance with Appendix A (ASD) or Appendix B (LRFD) of PCA 100.
4. An engineered design using loads and load combinations in accordance with Appendix A (ASD) or Appendix B (LRFD) of PCA 100.
5. An engineered design using loads and material design provisions in accordance with this code, or in accordance with ASCE 7, ACI 318, and AF&PA/NDS for wood frame construction or AISI S100 for cold-formed steel frame construction.

R611.9.3 Connections between concrete walls and light-framed ceiling and roof systems. Connections between concrete walls and light-framed ceiling and roof systems shall be in accordance with one of the following:

1. For ceiling and roof systems of wood frame construction, the provisions of Section R611.9.1 and the prescriptive details of Figures R611.9(9) and R611.9(10), where permitted by the tables accompanying those figures. Portions of connections of wood-framed ceiling and roof systems not noted in the figures shall be in accordance with Section R802, or AF&PA/WFCM, if applicable.
2. For ceiling and roof systems of cold-formed-steel construction, the provisions of Section R611.9.1 and the prescriptive details of Figures R611.9(11) and R611.9(12), where permitted by the tables accompanying those figures. Portions of connections of cold-formed-steel framed ceiling and roof systems not noted in the figures shall be in accordance with Section R804, or AISI S230, if applicable.
3. Proprietary connectors selected to resist loads and load combinations in accordance with Appendix A (ASD) or Appendix B (LRFD) of PCA 100.
4. An engineered design using loads and load combinations in accordance with Appendix A (ASD) or Appendix B (LRFD) of PCA 100.
5. An engineered design using loads and material design provisions in accordance with this code, or in accordance with ASCE 7, ACI 318, and AF&PA/NDS for wood-frame construction or AISI S100 for cold-formed-steel frame construction.

R611.10 Floor, roof and ceiling diaphragms. Floors and roofs in all buildings with exterior walls of concrete shall be designed and constructed as diaphragms. Where gable-end walls occur, ceilings shall also be designed and constructed as diaphragms. The design and construction of floors, roofs and ceilings of wood framing or cold-formed-steel framing serving as diaphragms shall comply with the applicable requirements of this code, or AF&PA/WFCM or AISI S230, if applicable.

TABLE R611.9(1)
WOOD-FRAMED FLOOR TO SIDE OF CONCRETE WALL, FRAMING PERPENDICULAR[a, b, c]

ANCHOR BOLT SPACING (inches)	TENSION TIE SPACING (inches)	BASIC WIND SPEED (mph)					
		85B	90B	100B	110B	120B	130B
				85C	90C	100C	110C
					85D	90D	100D
12	12						
12	24						
12	36						
12	48						
16	16					A	A
16	32						
16	48						
19.2	19.2	A	A	A	A	A	
19.2	38.4	A	A	A			

For SI: 1 inch = 25.4 mm, 1 mile per hour = 0.447 m/s.

a. This table is for use with the detail in Figure R611.9(1). Use of this detail is permitted where a cell is not shaded and prohibited where shaded.

b. Wall design per other provisions of Section R611 is required.

c. Letter "A" indicates that a minimum nominal 3 × 8 ledger is required.

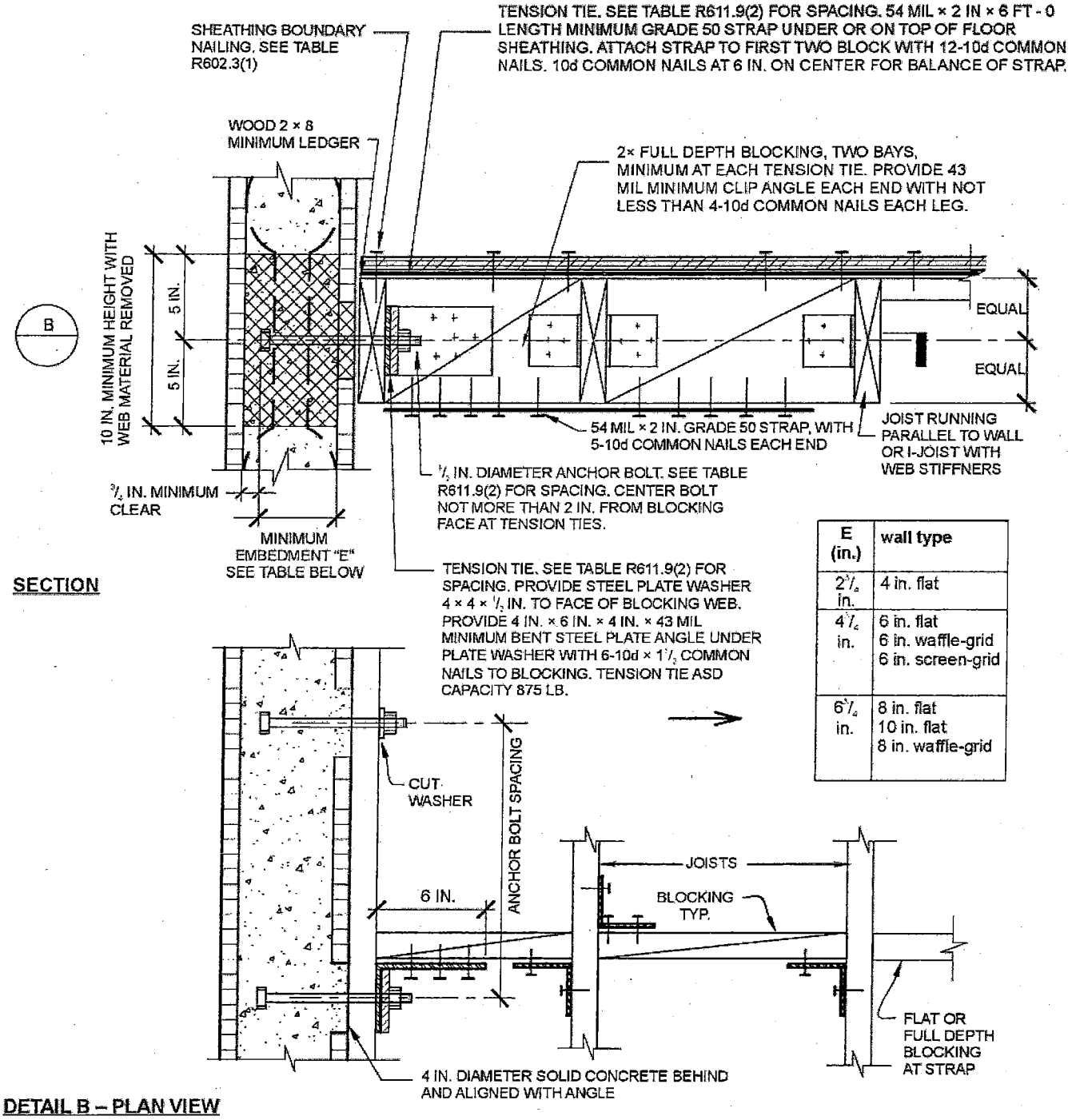

E (in.)	wall type
2⅜ in.	4 in. flat
4⅜ in.	6 in. flat 6 in. waffle-grid 6 in. screen-grid
6⅜ in.	8 in. flat 10 in. flat 8 in. waffle-grid

For SI: 1 mil = 0.0254 mm, 1 inch = 25.4 mm, 1 foot = 304.8 mm, 1 pound-force = 4.448 N.

FIGURE R611.9(2)
WOOD-FRAMED FLOOR TO SIDE OF CONCRETE WALL FRAMING PARALLEL

TABLE R611.9(2)
WOOD-FRAMED FLOOR TO SIDE OF CONCRETE WALL, FRAMING PARALLEL[a, b]

ANCHOR BOLT SPACING (inches)	TENSION TIE SPACING (inches)	BASIC WIND SPEED (mph) AND WIND EXPOSURE CATEGORY					
		85b	90B	100B	110B	120B	130B
				85C	90C	100C	110C
					85D	90D	100D
12	12						
12	24						
12	36						
12	48						
16	16						
16	32						
16	48						
19.2	19.2						
19.2	38.4						
24	24						
24	48						

For SI: 1 inch = 25.4 mm, 1 mile per hour = 0.447 m/s.

a. This table is for use with the detail in Figure R611.9(2). Use of this detail is permitted where a cell is not shaded and prohibited where shaded.

b. Wall design per other provisions of Section R611 is required.

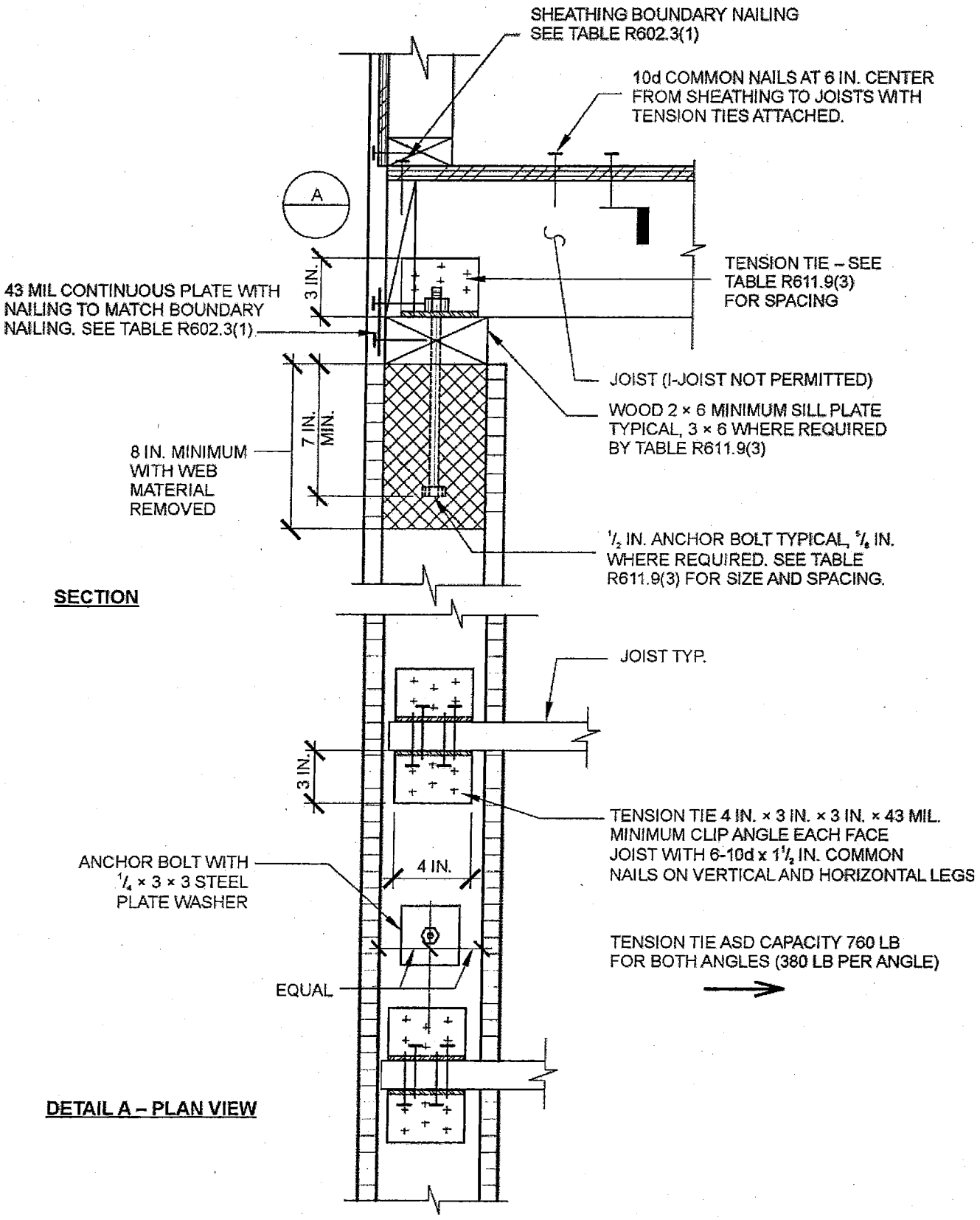

For SI: 1 mil = 0.0254 mm, 1 inch = 25.4 mm, 1 pound-force = 4.448 N.

FIGURE R611.9(3)
WOOD-FRAMED FLOOR TO TOP OF CONCRETE WALL FRAMING PERPENDICULAR

TABLE R611.9(3)
WOOD-FRAMED FLOOR TO TOP OF CONCRETE WALL, FRAMING PERPENDICULAR[a, b, c, d, e]

ANCHOR BOLT SPACING (inches)	TENSION TIE SPACING (inches)	BASIC WIND SPEED (mph) AND WIND EXPOSURE CATEGORY					
		85B	90B	100B	110B	120B	130B
				85C	90C	100C	110C
					85D	90D	100D
12	12						
12	24						
12	36						
12	48						
16	16					6 A	6 B
16	32					6 A	6 B
16	48						
19.2	19.2				6 A	6 A	6 B
19.2	38.4				6 A	6 A	
24	24			6 A	6 B	6 A	
24	48			6 A			

For SI: 1 inch = 25.4 mm, 1 mile per hour = 0.447 m/s.

a. This table is for use with the detail in Figure R611.9(3). Use of this detail is permitted where cell is not shaded, prohibited where shaded.

b. Wall design per other provisions in Section R611 is required.

c. For wind design, minimum 4-inch-nominal wall is permitted in unshaded cells with no number.

d. Number 6 indicates minimum permitted nominal wall thickness in inches necessary to develop required strength (capacity) of connection. As a minimum, this nominal thickness shall occur in the portion of the wall indicated by the cross-hatching in Figure R611.9(3). For the remainder of the wall, see Note b.

e. Letter "A" indicates that a minimum nominal 3 × 6 sill plate is required. Letter "B" indicates that a $^5/_8$-inch-diameter anchor bolt and a minimal nominal 3 × 6 sill plate are required.

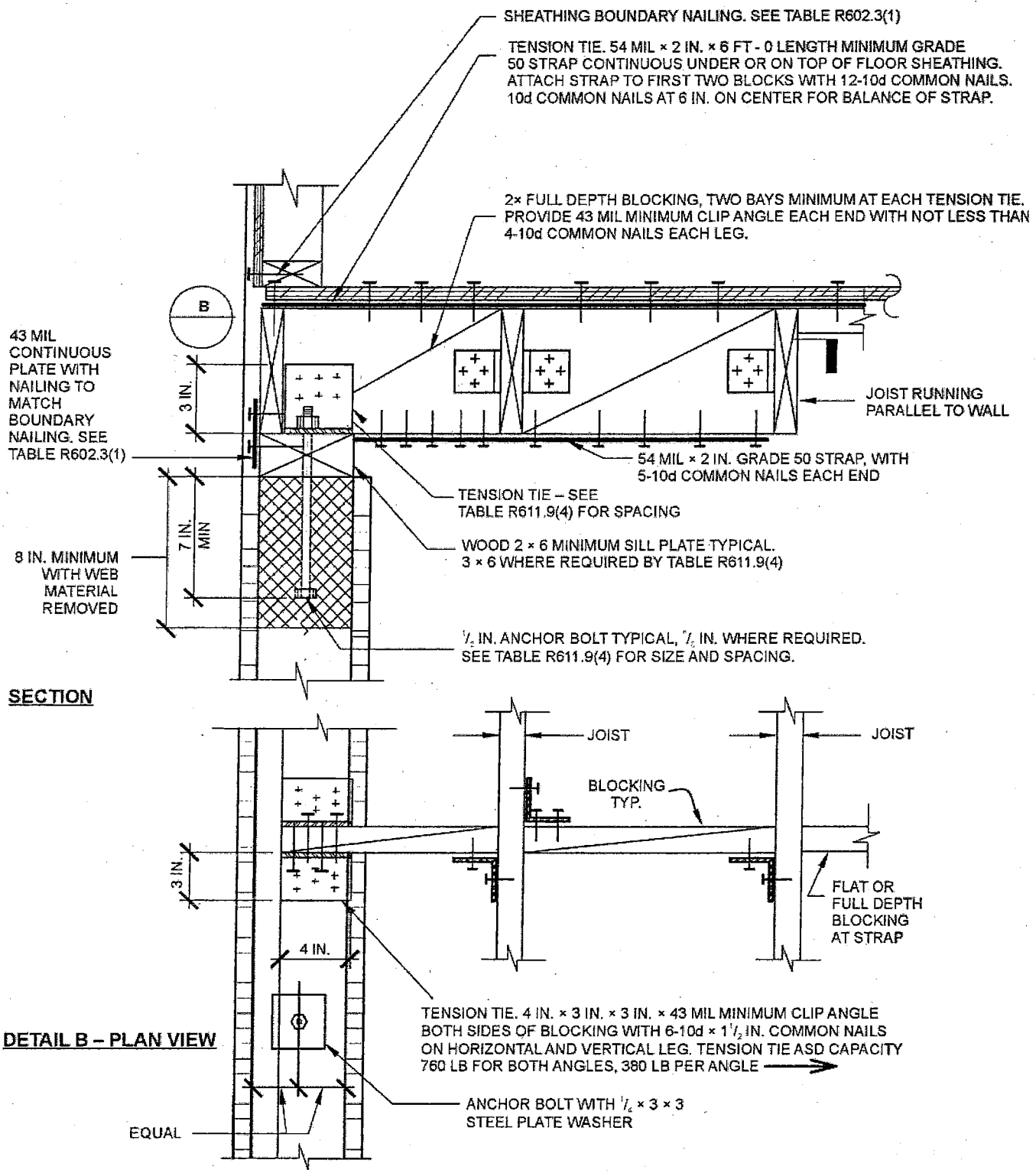

For SI: 1 mil = 0.0254 mm, 1 inch = 25.4 mm, 1 foot = 304.8 mm, 1 pound-force = 4.448 N.

FIGURE R611.9(4)
WOOD-FRAMED FLOOR TO TOP OF CONCRETE WALL FRAMING PARALLEL

TABLE R611.9(4)
WOOD-FRAMED FLOOR TO TOP OF CONCRETE WALL, FRAMING PARALLEL[a, b, c, d, e]

ANCHOR BOLT SPACING (inches)	TENSION TIE SPACING (inches)	BASIC WIND SPEED (mph) AND WIND EXPOSURE CATEGORY					
		85B	90B	100B	110B	120B	130B
				85C	90C	100C	110C
					85D	90D	100D
	12						
12	24						
12	36						
12	48						
16	16					6 A	6 B
16	32					6 A	6 B
16	48						
19.2	19.2				6 A	6 A	6 B
19.2	38.4				6 A	6 A	
24	24			6 A	6 B	6 B	
24	48			6 A			

For SI: 1 inch = 25.4 mm, 1 mile per hour = 0.447 m/s.

a. This table is for use with the detail in Figure R611.9(4). Use of this detail is permitted where a cell is not shaded, prohibited where shaded.

b. Wall design per other provisions of Section R611 is required.

c. For wind design, minimum 4-inch-nominal wall is permitted in unshaded cells with no number.

d. Number 6 indicates minimum permitted nominal wall thickness in inches necessary to develop required strength (capacity) of connection. As a minimum, this nominal thickness shall occur in the portion of the wall indicated by the cross-hatching in Figure R611.9(4). For the remainder of the wall, see Note b.

e. Letter "A" indicates that a minimum nominal 3 × 6 sill plate is required. Letter "B" indicates that a $^5/_8$-inch-diameter anchor bolt and a minimal nominal 3 × 6 sill plate are required.

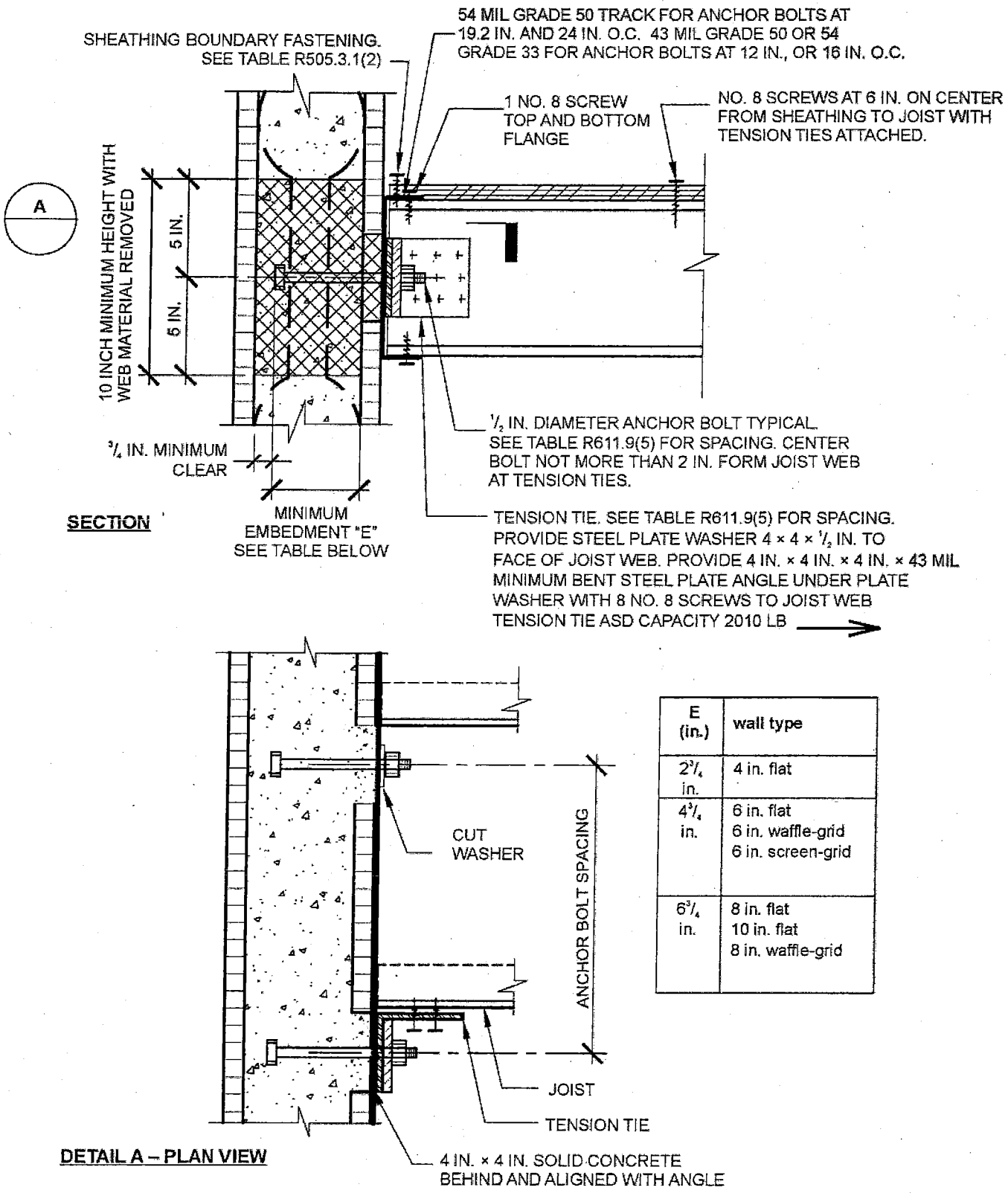

E (in.)	wall type
2 3/4 in.	4 in. flat
4 3/4 in.	6 in. flat 6 in. waffle-grid 6 in. screen-grid
6 3/4 in.	8 in. flat 10 in. flat 8 in. waffle-grid

For SI: 1 mil = 0.0254 mm, 1 inch = 25.4 mm, 1 pound-force = 4.448 N.

FIGURE R611.9(5)
COLD-FORMED STEEL FLOOR TO SIDE OF CONCRETE WALL, FRAMING PERPENDICULAR

4056

TABLE R611.9(5)
COLD-FORMED STEEL-FRAMED FLOOR TO SIDE OF CONCRETE WALL, FRAMING PERPENDICULAR[a, b, c, d]

ANCHOR BOLT SPACING (inches)	TENSION TIE SPACING (inches)	BASIC WIND SPEED (mph) AND WIND EXPOSURE CATEGORY					
		85B	90B	100B	110B	120B	130B
				85C	90C	100C	110C
					85D	90D	100D
12	12						
12	24						
12	36						6
12	48					6	6
16	16						
16	32						
16	48					6	6
19.2	19.2						
19.2	38.4						6
24	24						
24	48					6	6

For SI: 1 inch = 25.4 mm, 1 mile per hour = 0.4470 m/s.

a. This table is for use with the detail in Figure R611.9(5). Use of this detail is permitted where a cell is not shaded.

b. Wall design per other provisions of Section R611 is required.

c. For wind design, minimum 4-inch-nominal wall is permitted in unshaded cells with no number.

d. Number 6 indicates minimum permitted nominal wall thickness in inches necessary to develop required strength (capacity) of connection. As a minimum, this nominal thickness shall occur in the portion of the wall indicated by the cross-hatching in Figure R611.9(5). For the remainder of the wall, see Note b.

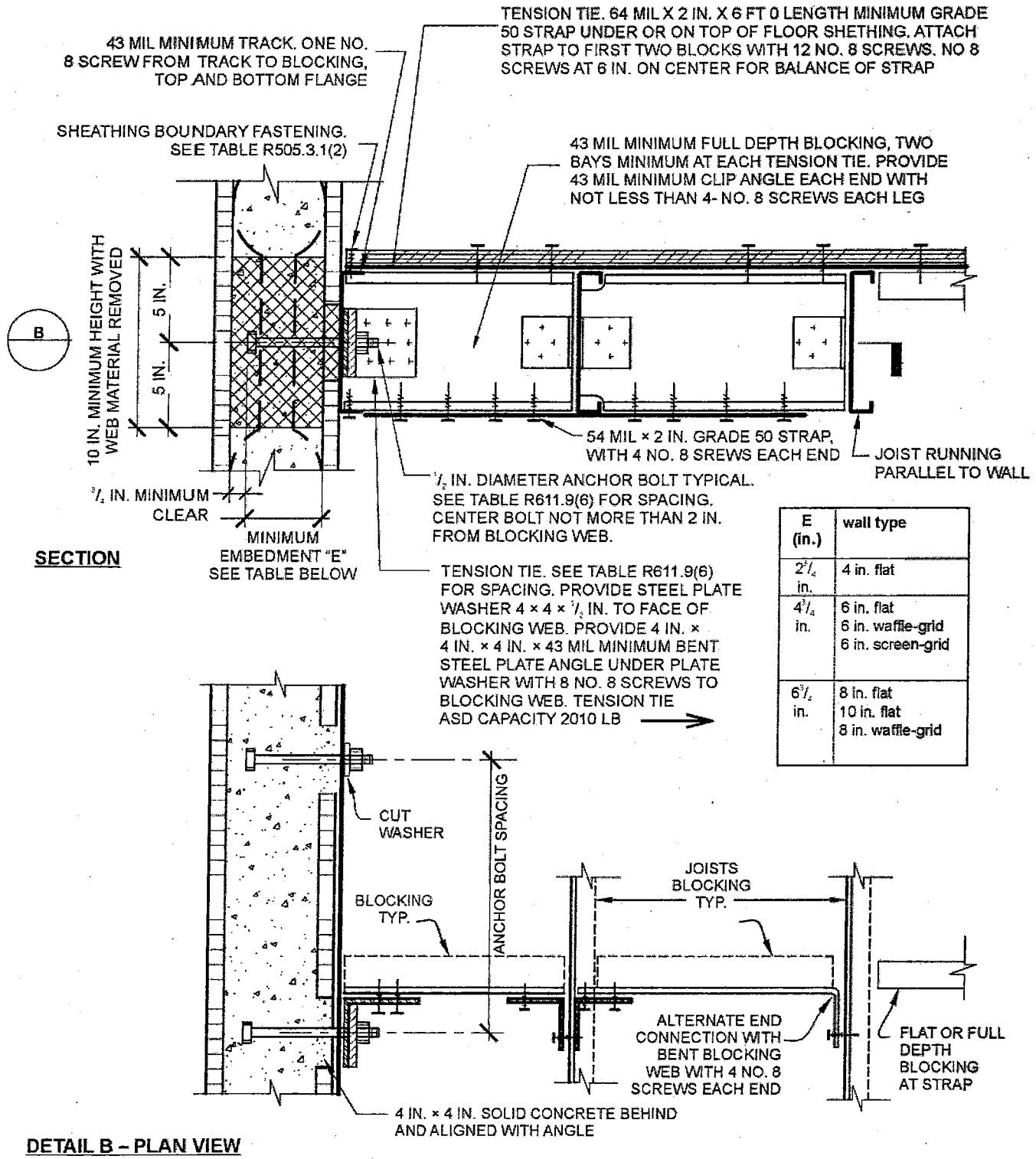

E (in.)	wall type
2 3/4 in.	4 in. flat
4 3/4 in.	6 in. flat 6 in. waffle-grid 6 in. screen-grid
6 3/4 in.	8 in. flat 10 in. flat 8 in. waffle-grid

For SI: 1 mil = 0.0254 mm, 1 inch = 25.4 mm, 1 pound-force = 4.448 N.

FIGURE R611.9(6)
COLD-FORMED STEEL FLOOR TO SIDE OF CONCRETE WALL, FRAMING PARALLEL

TABLE R611.9(6)
COLD-FORMED STEEL-FRAMED FLOOR TO SIDE OF CONCRETE WALL, FRAMING PARALLEL[a, b, c, d]

ANCHOR BOLT SPACING (inches)	TENSION TIE SPACING (inches)	BASIC WIND SPEED (mph) AND WIND EXPOSURE CATEGORY					
		85B	90B	100B	110B	120B	130B
				85C	90C	100C	110C
					85D	90D	100D
12	12						
12	24						
12	36						6
12	48					6	6
16	16						
16	32						
16	48					6	6
19.2	19.2						
19.2	38.4						6
24	24						
24	48					6	6

For SI: 1 inch = 25.4 mm, 1 mile per hour = 0.447 m/s.

a. This table is for use with the detail in Figure R611.9(6). Use of this detail is permitted where a cell is not shaded.

b. Wall design per other provisions of Section R611 is required.

c. For wind design, minimum 4-inch-nominal wall is permitted in unshaded cells with no number.

d. Number 6 indicates minimum permitted nominal wall thick ness in inches necessary to develop required strength (capacity) of connection. As a minimum, this nominal thickness shall occur in the portion of the wall indicated by the cross-hatching in Figure R611.9(6). For the remainder of the wall, see Note b.

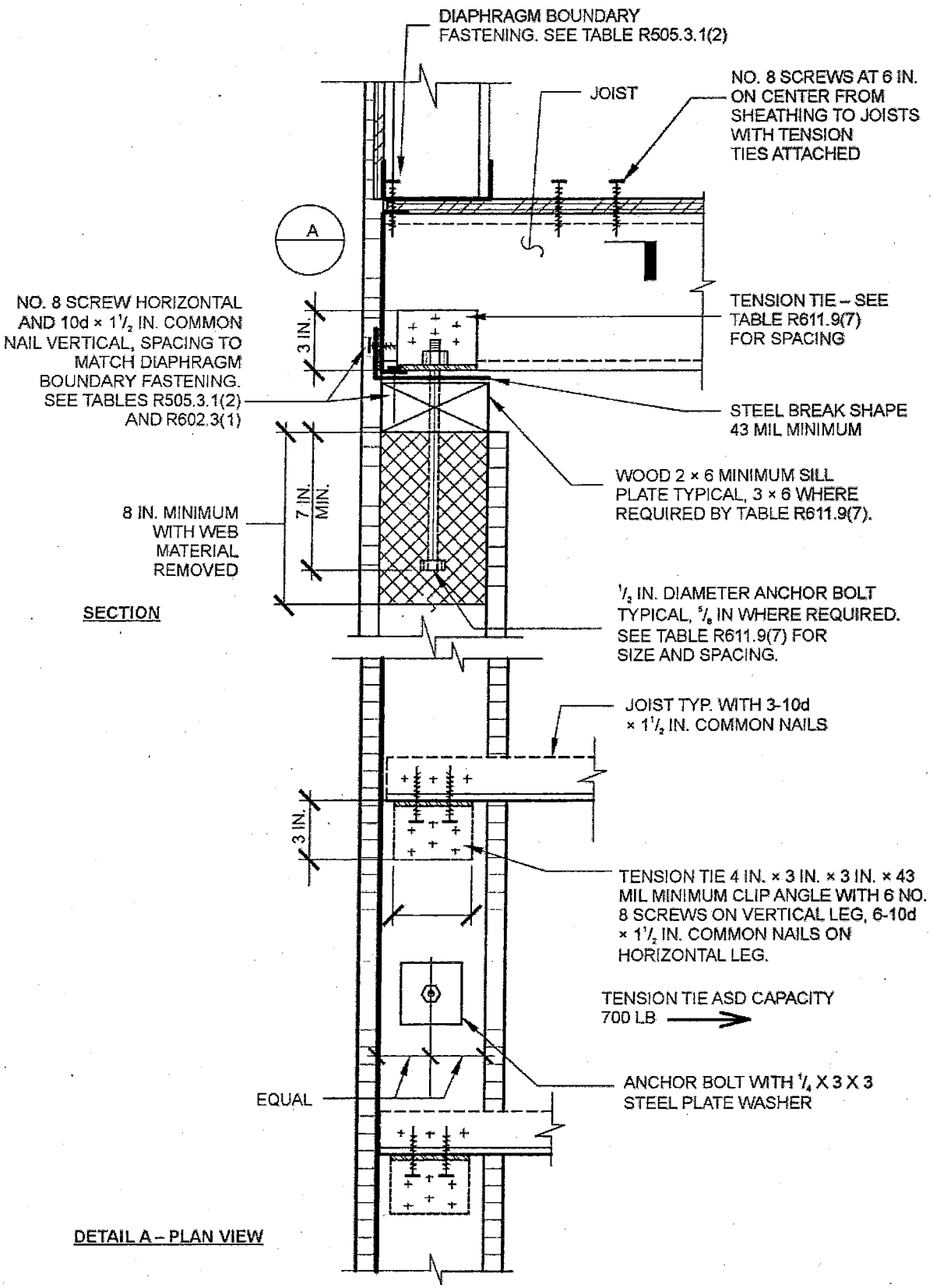

For SI: 1 mil = 0.0254 mm, 1 inch = 25.4 mm, 1 pound-force = 4.448 N.

FIGURE R611.9(7)
COLD-FORMED STEEL FLOOR TO TOP OF CONCRETE WALL FRAMING PERPENDICULAR

TABLE R611.9(7)
COLD-FORMED STEEL-FRAMED FLOOR TO TOP OF CONCRETE WALL, FRAMING PERPENDICULAR[a, b, c, d, e]

ANCHOR BOLT SPACING (inches)	TENSION TIE SPACING (inches)	BASIC WIND SPEED (mph) AND WIND EXPOSURE CATEGORY					
		85B	90B	100B	110B	120B	130B
				858C	90C	100C	110C
					85D	90D	100D
12	12						
12	24						
16	16					6 A	6 B
16	32					6 A	6 B
19.2	19.2				6 A	8 B	8 B
19.2	38.4				6 A	8 B	8 B
24	24			6 A	8 B	8 B	

For SI: 1 inch = 25.4 mm, 1 mile per hour = 0.447 m/s.

a. This table is for use with the detail in Figure R611.9(7). Use of this detail is permitted where a cell is not shaded, prohibited where shaded.

b. Wall design per other provisions of Section R611 is required.

c. For wind design, minimum 4-inch-nominal wall is permitted in unshaded cells with no number.

d. Numbers 6 and 8 indicate minimum permitted nominal wall thickness in inches necessary to develop required strength (capacity) of connection. As a minimum, this nominal thickness shall occur in the portion of the wall indicated by the cross-hatching in Figure R611.9(7). For the remainder of the wall, see Note b.

e. Letter "A" indicates that a minimum nominal 3 × 6 sill plate is required. Letter "B" indicates that a $^5/_8$-inch-diameter anchor bolt and a minimum nominal 3 × 6 sill plate are required.

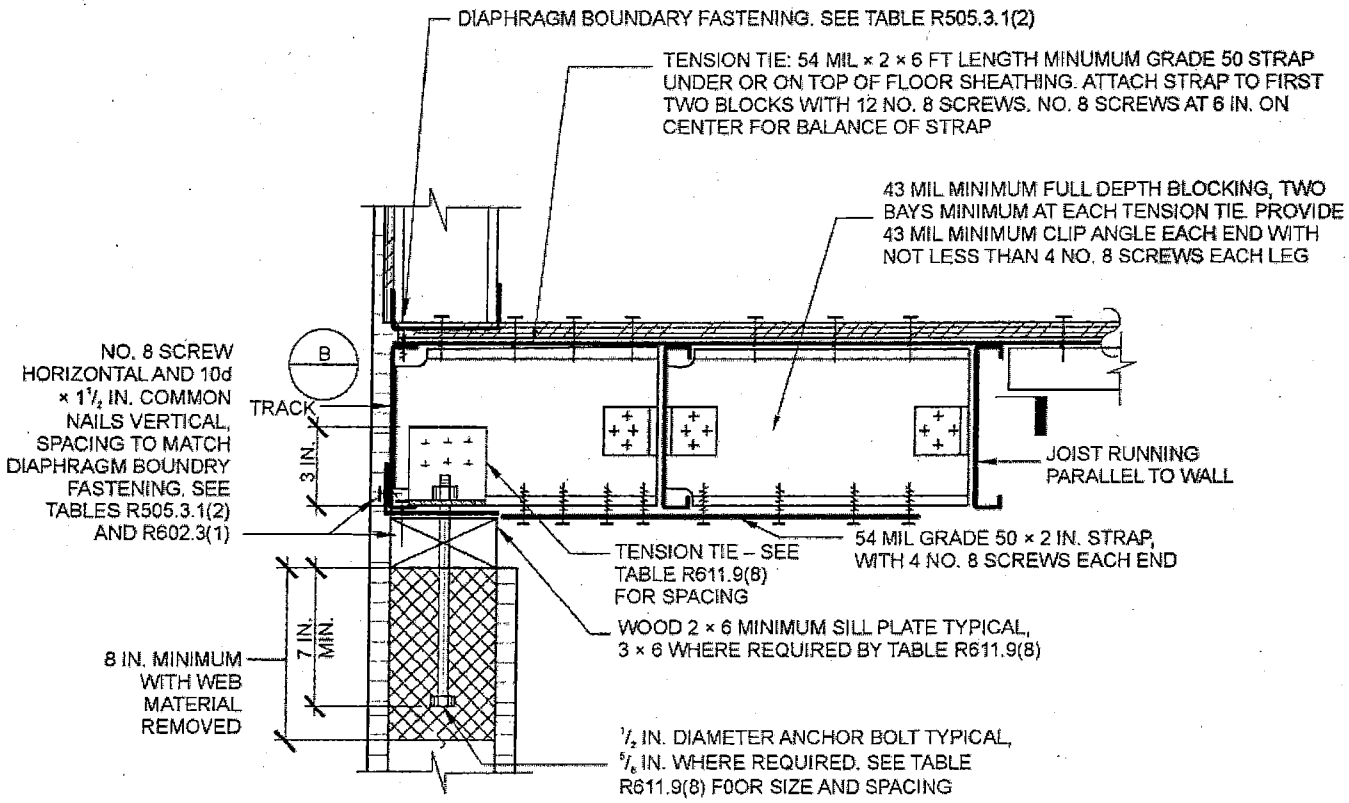

SECTION

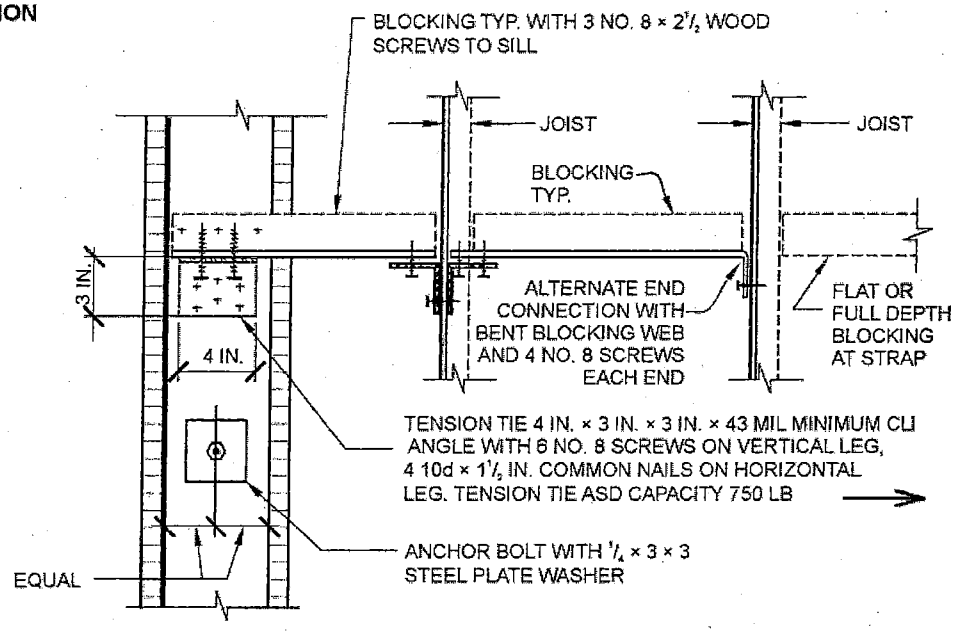

DETAIL B – PLAN VIEW

For SI: 1 mil = 0.0254 mm, 1 inch = 25.4 mm, 1 pound-force = 4.448 N.

FIGURE R611.9(8)
COLD-FORMED STEEL FLOOR TO TOP OF CONCRETE WALL, FRAMING PARALLEL

4062

TABLE R611.9(8)
COLD-FORMED STEEL-FRAMED FLOOR TO TOP OF CONCRETE WALL, FRAMING PARALLEL[a, b, c, d, e]

ANCHOR BOLT SPACING (inches)	TENSION TIE SPACING (inches)	BASIC WIND SPEED (mph) AND WIND EXPOSURE CATEGORY					
		85B	90B	100B	110B	120B	130B
				85C	90C	100C	110C
					85D	90D	100D
12	12						
12	24						
16	16					6 A	6 B
16	32					6 A	6 B
19.2	19.2				6 A	8 B	8 B
19.2	38.4				6 A	8 B	8 B
24	24			6 A	8 B	8 B	

For SI: 1 inch = 25.4 mm, 1 mile per hour = 0.447 m/s.

a. This table is for use with the detail in Figure R611.9(8). Use of this detail is permitted where a cell is not shaded, prohibited where shaded.

b. Wall design per other provisions of Section R611 is required.

c. For wind design, minimum 4-inch-nominal wall is permitted in unshaded cells with no number.

d. Numbers 6 and 8 indicate minimum permitted nominal wall thickness in inches necessary to develop required strength (capacity) of connection. As a minimum, this nominal thickness shall occur in the portion of the wall indicated by the cross-hatching in Figure R611.9(8). For the remainder of the wall, see Note b.

e. Letter "A" indicates that a minimum nominal 3 × 6 sill plate is required. Letter "B" indicates that a $^5/_8$-inch-diameter anchor bolt and a minimum nominal 3 × 6 sill plate are required.

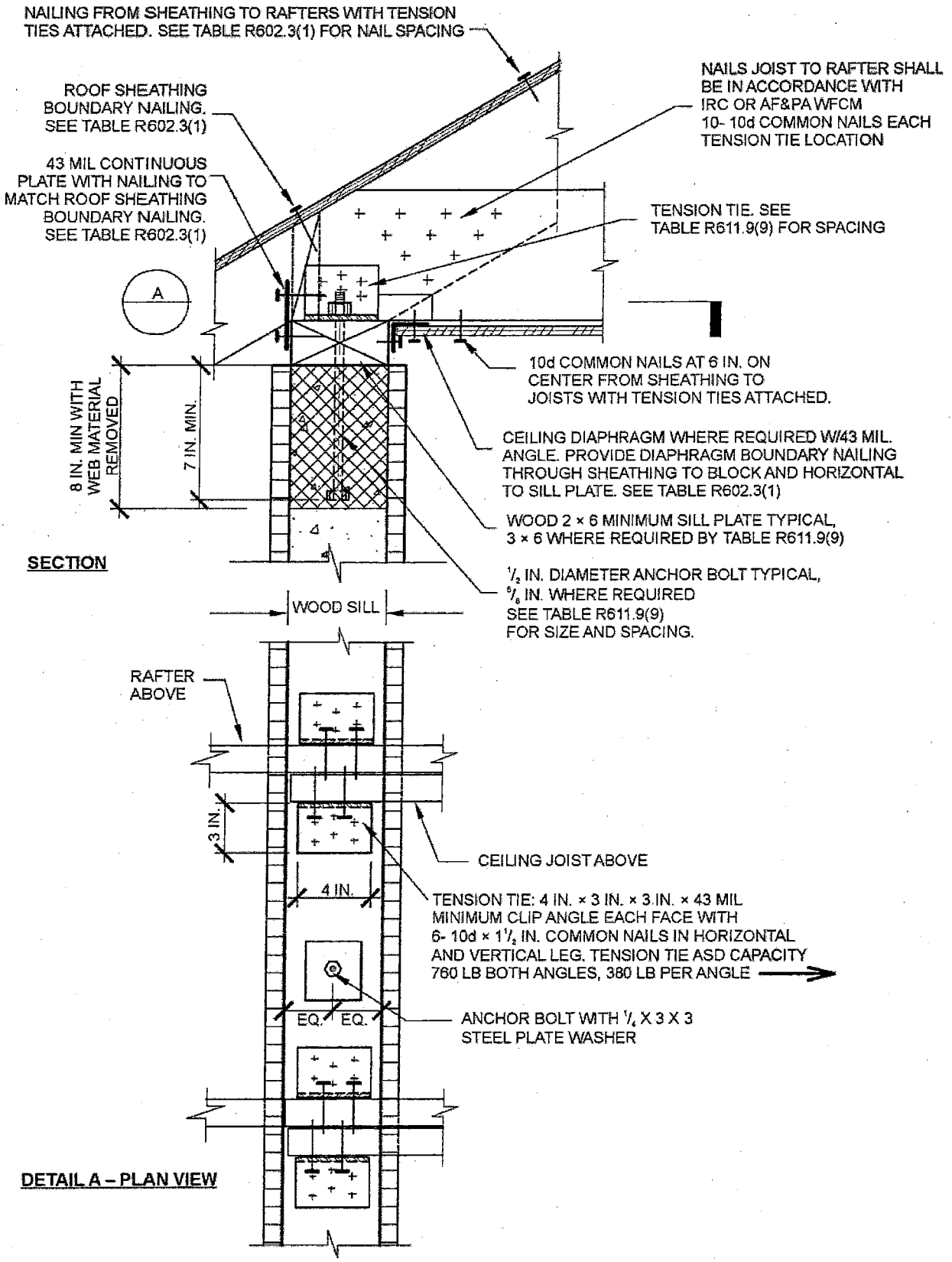

For SI: 1 mil = 0.0254 mm, 1 inch = 25.4 mm, 1 pound-force = 4.448 N.

FIGURE R611.9(9)
WOOD-FRAMED ROOF TO TOP OF CONCRETE WALL, FRAMING PERPENDICULAR

TABLE R611.9(9)
WOOD-FRAMED ROOF TO TOP OF CONCRETE WALL, FRAMING PERPENDICULAR[a, b, c, d, e]

ANCHOR BOLT SPACING (inches)	TENSION TIE SPACING (inches)	BASIC WIND SPEED (mph) AND WIND EXPOSURE CATEGORY					
		85B	90B	100B	110B	120B	130B
				85C	90C	100C	110C
					85D	90D	100D
12	12						
12	24						
12	36						
12	48						
16	16						6
16	32						6
16	48						
19.2	19.2					6	6 A
19.2	38.4					6	
24	24				6 A	6 A	6 B
24	48						

For SI: 1 inch = 25.4 mm, 1 mile per hour = 0.447 m/s.

a. This table is for use with the detail in Figure R611.9(9). Use of this detail is permitted where cell a is not shaded, prohibited where shaded.

b. Wall design per other provisions of Section R611 is required.

c. For wind design, minimum 4-inch-nominal wall is permitted in unshaded cells with no number.

d. Number 6 indicates minimum permitted nominal wall thickness in inches necessary to develop required strength (capacity) of connection. As a minimum, this nominal thickness shall occur in the portion of the wall indicated by the cross-hatching in Figure R611.9(9). For the remainder of the wall, see Note b.

e. Letter "A" indicates that a minimum nominal 3 × 6 sill plate is required. Letter "B" indicates that a $^5/_8$-inch-diameter anchor bolt and a minimum nominal 3 × 6 sill plate are required.

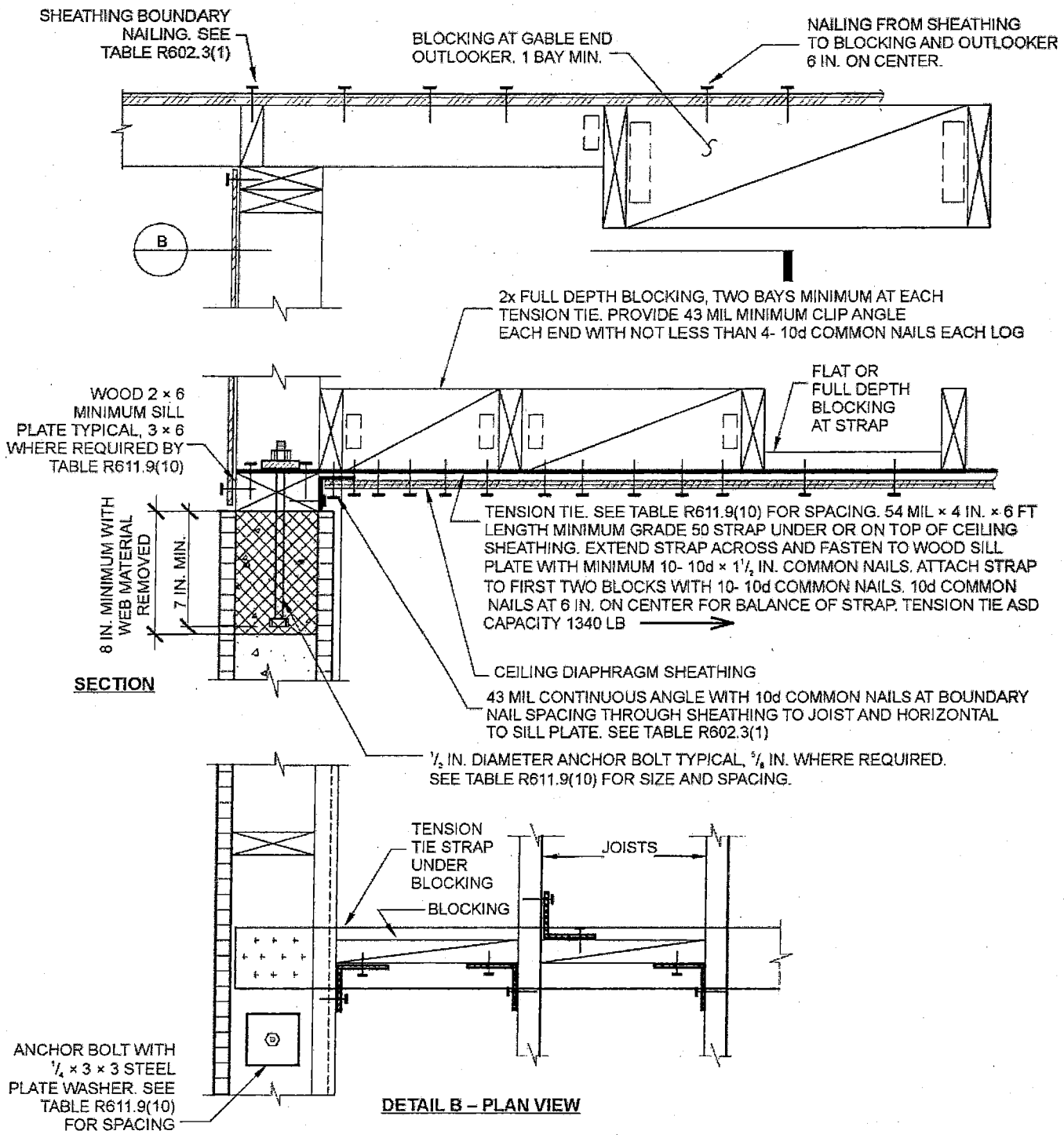

For SI: 1 mil = 0.0254 mm, 1 inch = 25.4 mm, 1 pound-force = 4.448 N.

FIGURE R611.9(10)
WOOD-FRAMED ROOF TO TOP OF CONCRETE WALL FRAMING PARALLEL

TABLE R611.9(10)
WOOD-FRAMED ROOF TO TOP OF CONCRETE WALL, FRAMING PARALLEL[a, b, c, d, e]

ANCHOR BOLT SPACING (inches)	TENSION TIE SPACING (inches)	BASIC WIND SPEED (mph) AND WIND EXPOSURE CATEGORY					
		85B	90B	100B	110B	120B	130B
				85C	90C	100C	110C
					85D	90D	100D
12	12						
12	24						
12	36						
12	48						
16	16					6	6
16	32					6	6
16	48					6	6
19.2	19.2				6	6	6 A
19.2	38.4				6	6	6 A
24	24			6	6 A	6 A	6 B
24	48			6	6 A	6 B	6 B

For SI: 1 inch = 25.4 mm, 1 mile per hour = 0.447 m/s.

a. This table is for use with the detail in Figure R611.9(10). Use of this detail is permitted where a cell is not shaded.

b. Wall design per other provisions of Section R611 is required.

c. For wind design, minimum 4-inch-nominal wall is permitted in cells with no number.

d. Number 6 indicates minimum permitted nominal wall thickness in inches necessary to develop required strength (capacity) of connection. As a minimum, this nominal thickness shall occur in the portion of the wall indicated by the cross-hatching in Figure R611.9(10). For the remainder of the wall, see Note b.

e. Letter "A" indicates that a minimum nominal 3 x 6 sill plate is required. Letter "B" indicates that a $^5/_8$-inch-diameter anchor bolt and a minimum nominal 3 x 6 sill plate are required.

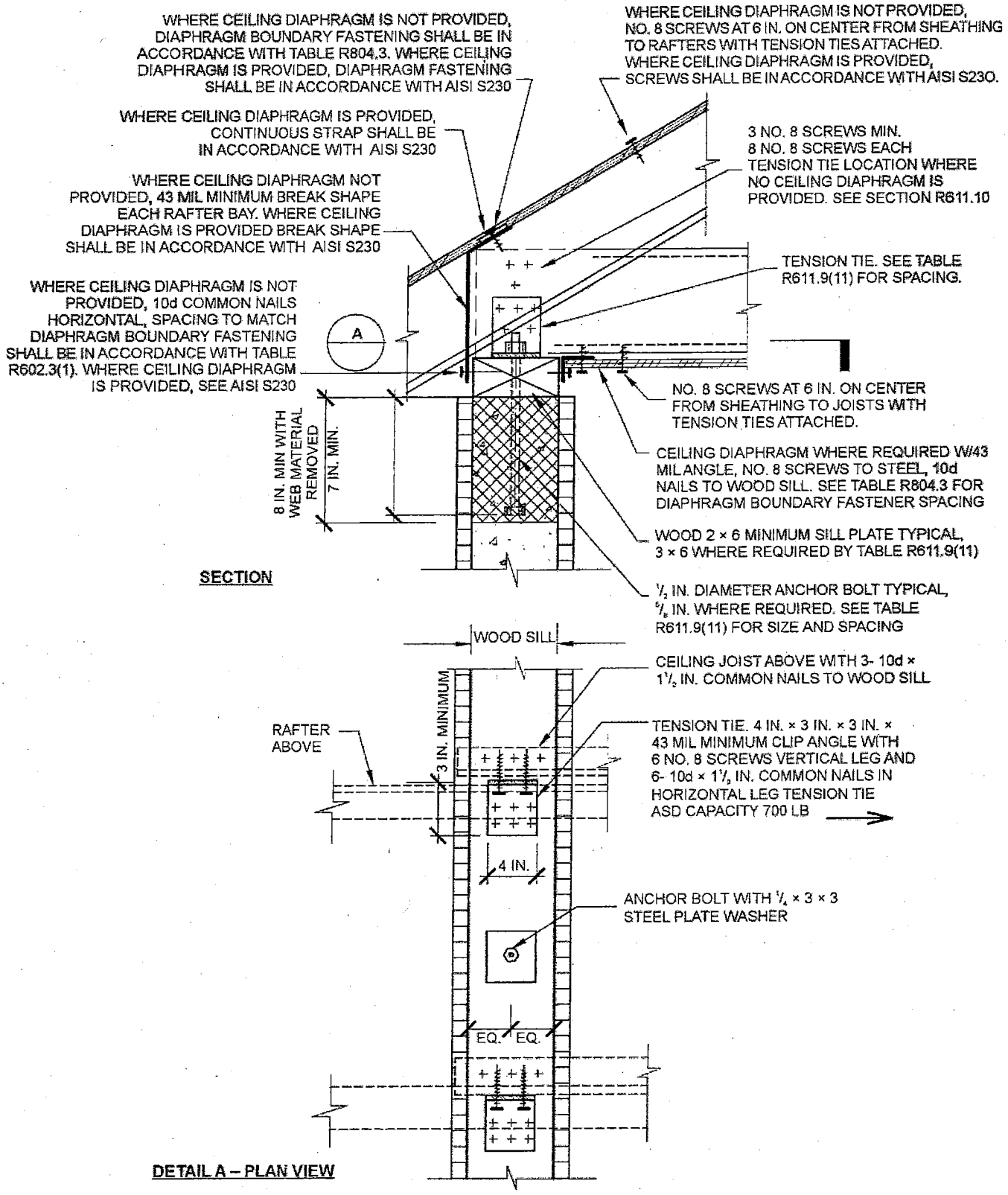

For SI: 1 mil = 0.0254 mm, 1 inch = 25.4 mm, 1 foot = 304.8 mm, 1 pound-force = 4.448 N.

FIGURE R611.9(11)
COLD-FORMED STEEL ROOF TO TOP OF CONCRETE WALL, FRAMING PERPENDICULAR

TABLE R611.9(11)
WOOD-FRAMED ROOF TO TOP OF CONCRETE WALL, FRAMING PERPENDICULAR[a, b, c, d, e]

ANCHOR BOLT SPACING (inches)	TENSION TIE SPACING (inches)	BASIC WIND SPEED (mph) AND WIND EXPOSURE CATEGORY					
		85B	90B	100B	110B	120B	130B
				85C	90C	100C	110C
					85D	90D	100D
12	12						
12	24						
16	16					6	6
16	32					6	6
19.2	19.2				6	6	8 B
19.2	38.4				6	6	8 B
24	24			6	6	8 B	

For SI: 1 inch = 25.4 mm, 1 mile per hour = 0.447 m/s.

a. This table is for use with the detail in Figure R611.9(11). Use of this detail is permitted where a cell is not shaded, prohibited where shaded.

b. Wall design per other provisions of Section R611 is required.

c. For wind design, minimum 4-inch-nominal wall is permitted in unshaded cells with no number.

d. Numbers 6 and 8 indicate minimum permitted nominal wall thickness in inches necessary to develop required strength (capacity) of connection. As a minimum, this nominal thick ness shall occur in the portion of the wall indicated by the cross-hatching in Figure R611.9(11). For the remainder of the wall, see Note b.

e. Letter "B" indicates that a $^5/_8$-inch-diameter anchor bolt and a minimum nominal 3 × 6 sill plate are required.

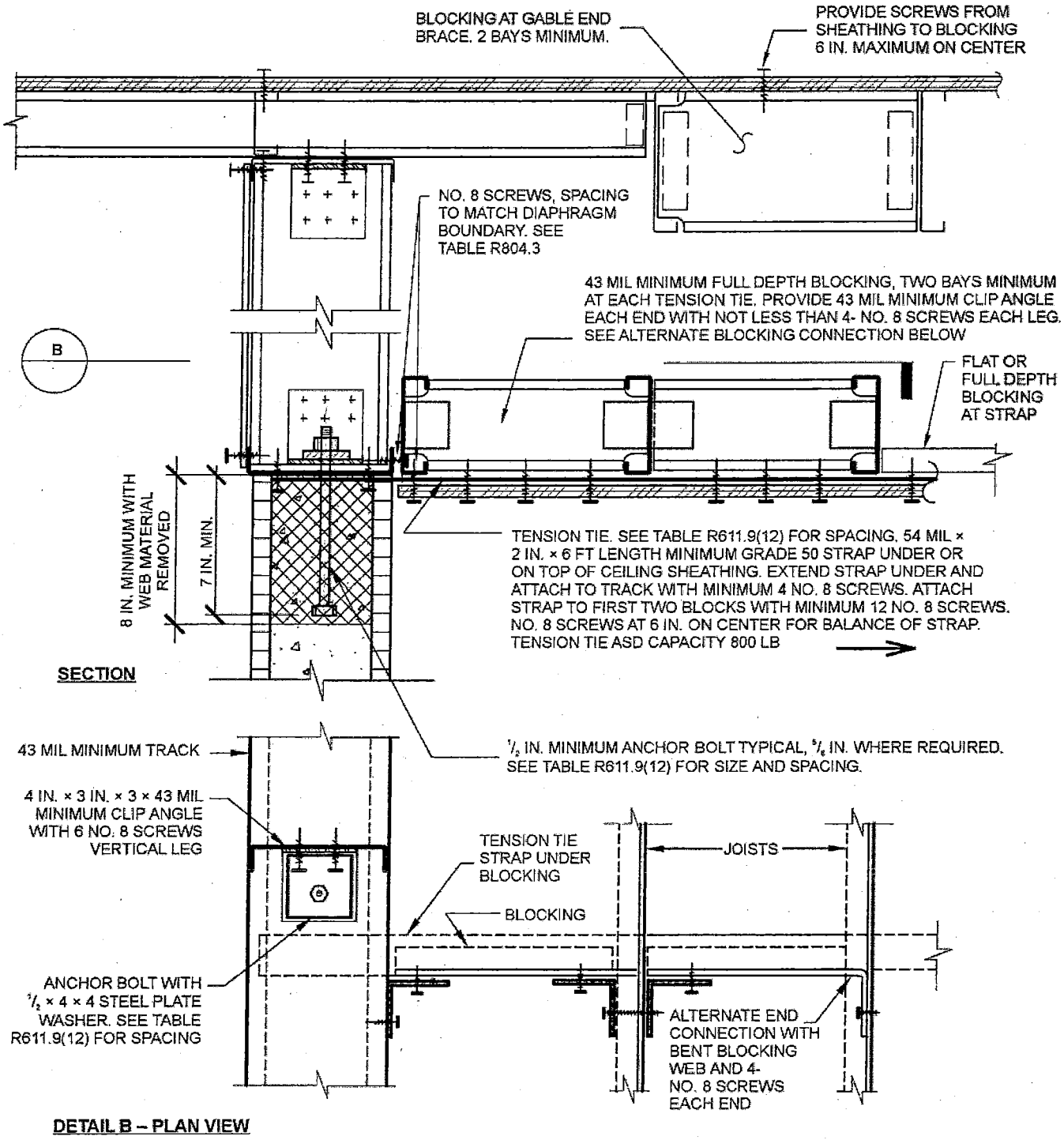

For SI: 1 mil = 0.0254 mm, 1 inch = 25.4 mm, 1 pound-force = 4.448 N.

FIGURE R611.9(12)
COLD-FORMED STEEL ROOF TO TOP OF CONCRETE WALL, FRAMING PARALLEL

TABLE R611.9(12)
COLD-FORMED STEEL ROOF TO TOP OF CONCRETE WALL, FRAMING PARALLEL[a, b, c, d, e]

ANCHOR BOLT SPACING (inches)	TENSION TIE SPACING (inches)	BASIC WIND SPEED (mph) AND WIND EXPOSURE CATEGORY					
		85B	90B	100B	110B	120B	130B
				85C	90C	100C	110C
					85D	90D	100D
12	12						
12	24						
16	16						
16	32						
19.2	19.2					6	6
19.2	38.4					6	6
24	24			6	6	8 B	8 B

For SI: 1 inch = 25.4 mm, 1 mile per hour = 0.447 m/s.

a. This table is for use with the detail in Figure R611.9(12). Use of this detail is permitted where a cell is not shaded.

b. Wall design per other provisions of Section R611 is required.

c. For wind design, minimum 4-inch-nominal wall is permitted in cells with no number.

d. Numbers 6 and 8 indicate minimum permitted nominal wall thickness in inches necessary to develop required strength (capacity) of connection. As a minimum, this nominal thickness shall occur in the portion of the wall indicated by the cross-hatching in Figure R611.9(12). For the remainder of the wall, see Note b.

e. Letter "B" indicates that a $^5/_8$-inch-diameter anchor bolt is required.

SECTION R612
EXTERIOR WINDOWS AND DOORS

R612.1 General. This section prescribes performance and construction requirements for exterior window and door installed in wall. Windows and doors shall be installed and flashed in accordance with the fenestration manufacturer's written installation instructions. Window and door openings shall be flashed in accordance with Section R703.8. Written installation instructions shall be provided by the fenestration manufacturer for each window or door.

* **R612.2 Performance.** Exterior windows and doors shall be designed to resist the design wind loads specified in Table R301.2(2) adjusted for height and exposure in accordance with Table R301.2(3).

R612.3 Testing and labeling. Exterior windows and sliding doors shall be tested by an approved independent laboratory, and bear a label identifying manufacturer, performance characteristics and approved inspection agency to indicate compliance with AAMA/WDMA/CSA 101/I.S.2/A440. Exterior side-hinged doors shall be tested and labeled as conforming to AAMA/WDMA/CSA 101/I.S.2/A440 or comply with Section R612.5.

Exception: Decorative glazed openings.

R612.3.1 Comparative analysis. Structural wind load design pressures for window and door units smaller than the size tested in accordance with Section R612.3 shall be permitted to be higher than the design value of the tested unit provided such higher pressures are determined by accepted engineering analysis. All components of the small unit shall be the same as those of the tested unit. Where such calculated design pressures are used, they shall be validated by an additional test of the window or door unit having the highest allowable design pressure.

R612.4 Garage doors. Garage doors shall be tested in accordance with either ASTM E 330 or ANSI/ DASMA 108, and shall meet the acceptance criteria of ANSI/DASMA 108.

R612.5 Other exterior window and door assemblies. Exterior windows and door assemblies not included within the scope of Section R612.3 or Section R612.4 shall be tested in accordance with ASTM E 330. Glass in assemblies covered by this exception shall comply with Section R308.5

R612.6 Wind-borne debris protection. Protection of exterior windows and glass doors in buildings located in wind-borne debris regions shall be in accordance with Section R301.2.1.2.

R612.6.1 Fenestration testing and labeling. Fenestration shall be tested by an approved independent laboratory, listed by an approved entity, and bear a label identifying manufacturer, performance characteristics, and approved inspection agency to indicate compliance with the requirements of the following specification:

1. ASTM E 1886 and ASTM E 1996; or
2. AAMA 506.

R612.7 Anchorage methods. The methods cited in this section apply only to anchorage of window and glass door assemblies to the main force-resisting system.

R612.7.1 Anchoring requirements. Window and glass door assemblies shall be anchored in accordance with the published manufacturer's recommendations to achieve the design pressure specified. Substitute anchoring systems used for substrates not specified by the fenestration manufacturer shall provide equal or greater anchoring performance as demonstrated by accepted engineering practice.

R612.7.2 Anchorage details. Products shall be anchored in accordance with the minimum requirements illustrated in Figures R612.7.2(1), R612.7.2(2), R612.7.2(3), R612.7.2(4), R612.7.2(5), R612.7.2(6), R612.7.2(7) and R612.7.2(8).

R612.7.2.1 Masonry, concrete or other structural substrate. Where the wood shim or buck thickness is less than $1^1/_2$ inches (38 mm), window and glass door assemblies shall be anchored through the jamb, or by jamb clip and anchors shall be embedded directly into the masonry, concrete or other substantial substrate material. Anchors shall adequately transfer load from the window or door frame into the rough opening substrate [see Figures R612.7.2(1) and R612.7.2(2)].

Where the wood shim or buck thickness is $1^1/_2$ inches (38 mm) or more, the buck is securely fastened to the masonry, concrete or other substantial substrate, and the buck extends beyond the interior face of the window or door frame, window and glass door assemblies shall be anchored through the jamb, or by jamb clip, or through the flange to the secured wood buck. Anchors shall be embedded into the secured wood buck to adequately transfer load from the window or door frame assembly [Figures R612.7.2(3), R612.7.2(4) and R612.7.2(5)].

R612.7.2.2 Wood or other approved framing material. Where the framing material is wood or other approved framing material, window and glass door assemblies shall be anchored through the frame, or by frame clip, or through the flange. Anchors shall be embedded into the frame construction to adequately transfer load [Figures R612.7.2(6), R612.7.2(7) and R612.7.2(8)].

R612.8 Mullions. Mullions shall be tested by an approved testing laboratory in accordance with AAMA 450, or be engineered in accordance with accepted engineering practice. Mullions tested as stand-alone units or qualified by engineering shall use performance criteria cited in Sections R612.8.1, R612.8.2 and R612.8.3. Mullions qualified by an actual test of an entire assembly shall comply with Sections R612.8.1 and R612.8.3.

R612.8.1 Load transfer. Mullions shall be designed to transfer the design pressure loads applied by the window and door assemblies to the rough opening substrate.

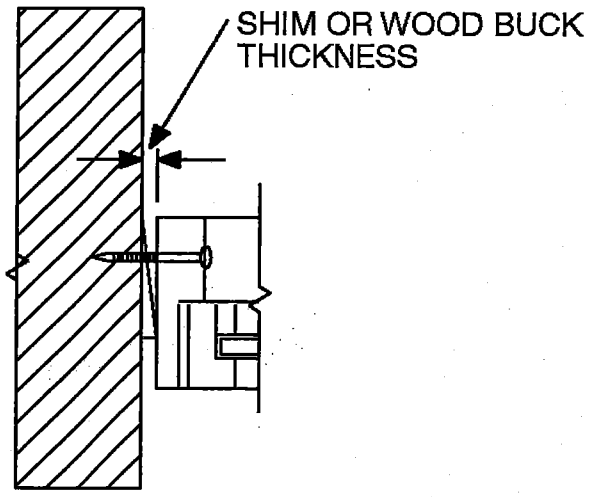

FIGURE R612.7.2(1)
THROUGH THE FRAME

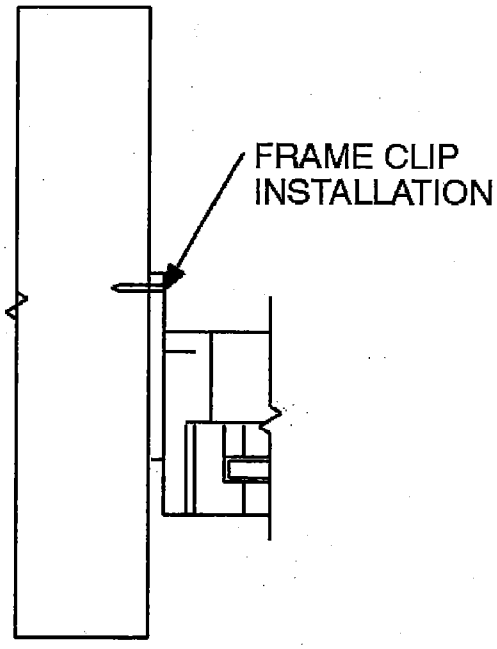

FIGURE R612.7.2(2)
FRAME CLIP

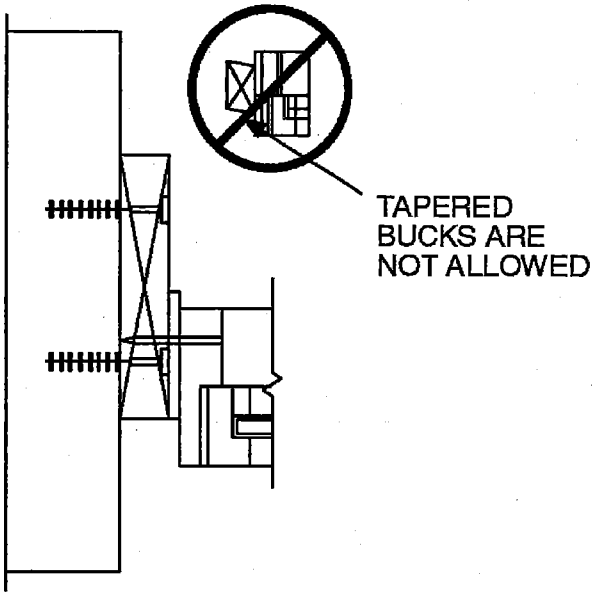

FIGURE R612.7.2(3)
THROUGH THE FRAME

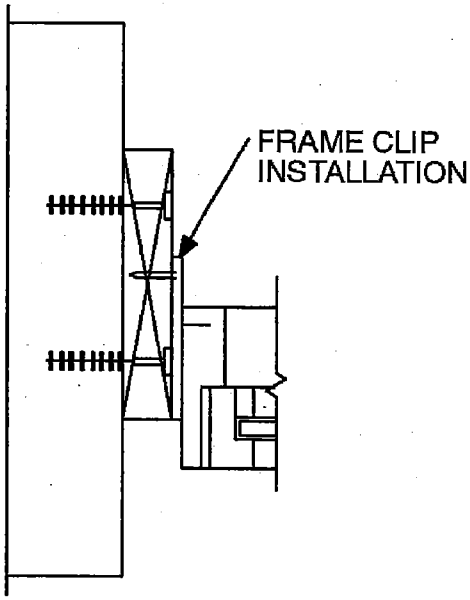

FIGURE R612.7.2(4)
FRAME CLIP

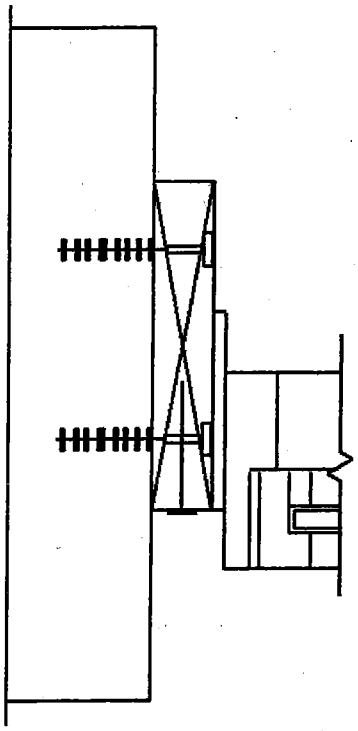

FIGURE R612.7.2(5)
THROUGH THE FLANGE

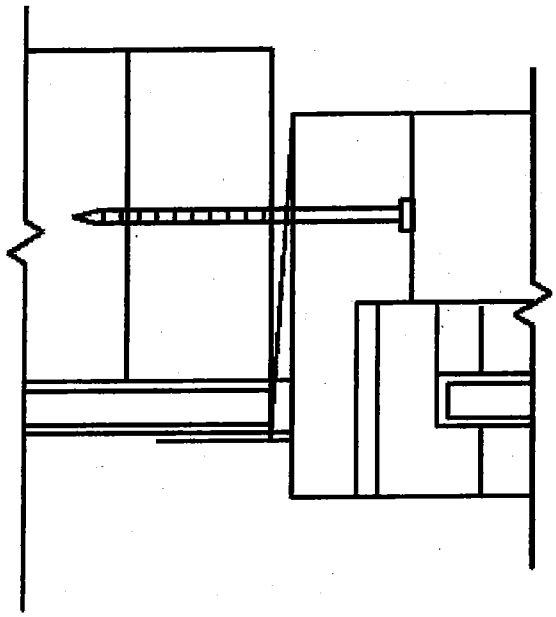

FIGURE R612.7.2(6)
THROUGH THE FLANGE

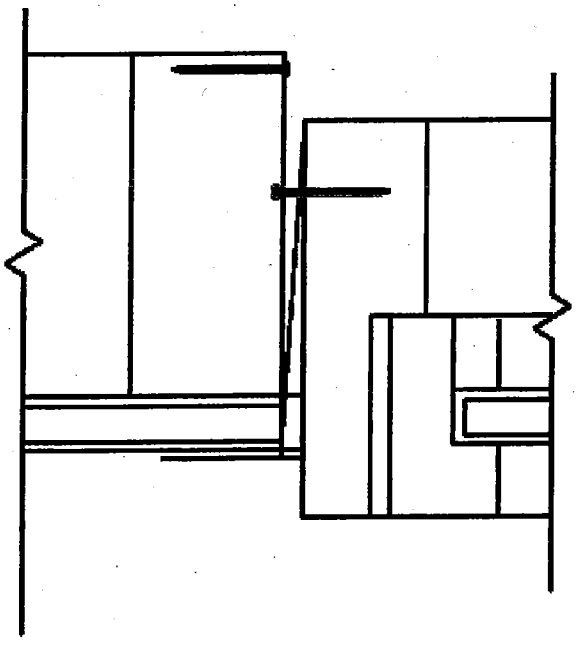

FIGURE R612.7.2(7)
FRAME CLIP

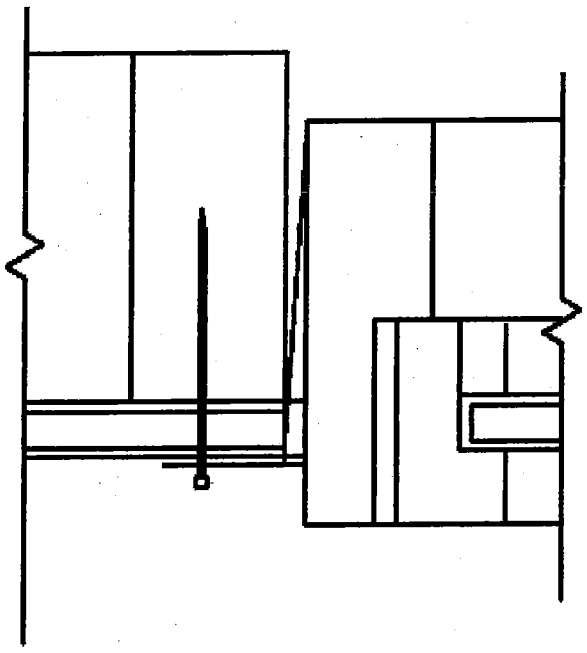

FIGURE R612.7.2(8)
THROUGH THE FLANGE

R612.8.2 Deflection. Mullions shall be capable of resisting the design pressure loads applied by the window and door assemblies to be supported without deflecting more than $L/175$, where L is the span of the mullion in inches.

R612.8.3 Structural safety factor. Mullions shall be capable of resisting a load of 1.5 times the design pressure loads applied by the window and door assemblies to be supported without exceeding the appropriate material stress levels. If tested by an approved laboratory, the 1.5 times the design pressure load shall be sustained for 10 seconds, and the permanent deformation shall not exceed 0.4 percent of the mullion span after the 1.5 times design pressure load is removed.

SECTION R613
STRUCTURAL INSULATED PANEL WALL CONSTRUCTION

R613.1 General. Structural insulated panel (SIP) walls shall be designed in accordance with the provisions of this section. *The* provisions of this section used to design structural insulated panel walls, project drawings, typical details and specifications *shall not exempt construction documents from the requirement to be stamped by a California licensed architect or engineer. Notwithstanding other sections of law, the law establishing these provisions is found in Business and Professions Code Sections 5537.1 and 6737.1.*

R613.2 Applicability limits. The provisions of this section shall control the construction of exterior structural insulated panel walls and interior load-bearing structural insulated panel walls for buildings not greater than 60 feet (18 288 mm) in length perpendicular to the joist or truss span, not greater than 40 feet (12 192 mm) in width parallel to the joist or truss span and not greater than two stories in height with each wall not greater than 10 feet (3048 mm) high. All exterior walls installed in accordance with the provisions of this section shall be considered as load-bearing walls. Structural insulated panel walls constructed in accordance with the provisions of this section shall be limited to sites subjected to a maximum design wind speed of 120 miles per hour (54 m/s), Exposure A or B or 110 miles per hour (49 m/s) Exposure C, and a maximum ground snow load of 70 pounds per foot (3.35 kPa), and Seismic Design Categories A, B and C.

R613.3 Materials. SIPs shall comply with the following criteria:

R613.3.1 Core. The core material shall be composed of foam plastic insulation meeting one of the following requirements:

1. ASTM C 578 and have a minimum density of 0.90 pounds per cubic feet (14.4 kg/m^3); or
2. Polyurethane meeting the physical properties shown in Table R613.3.1, or;
3. An approved alternative.

All cores shall meet the requirements of Section R316.

TABLE R613.3.1
MINIMUM PROPERTIES FOR POLYURETHANE INSULATION USED AS SIPS CORE

PHYSICAL PROPERTY	POLYURETHANE
Density, core nominal (ASTM D 1622)	2.2 lb/ft^3
Compressive resistance at yield or 10% deformation, whichever occurs first (ASTM D 1621)	19 psi (perpendicular to rise)
Flexural strength, min. (ASTM C 203)	30 psi
Tensile strength, min. (ASTM D 1623)	35 psi
Shear strength, min. (ASTM C 273)	25 psi
Substrate adhesion, min. (ASTM D 1623)	22 psi
Water vapor permeance of 1.00-in. thickness, max. (ASTM E 96)	2.3 perm
Water absorption by total immersion, max. (ASTM C 272)	4.3% (volume)
Dimensional stability (change in dimensions), max. [ASTM D 2126 (7 days at 158°F/100% humidity and 7 days at -20°F)]	2%

For SI: 1 pound per cubic foot = 16.02 kg/m^3, 1 pound per square inch = 6.895 kPa, °C = [(°F) - 32]1.8.

TABLE R613.3.2
MINIMUM PROPERTIES[a] FOR ORIENTED STRAND BOARD FACER MATERIAL IN SIP WALLS

Thickness (in.)	Product	Flatwise Stiffness[b] (lbf-in^2/ft)		Flatwise Strength [c] (lbf-in/ft)		Tension [c] (lbf/ft)		Density[d] (pcf)
		Along	Across	Along	Across	Along	Across	
7/16	Sheathing	55,600	16,500	1,040	460	7,450	5,800	34

For SI: 1 inch = 25.4 mm, 1 lbf-in^2/ft = 9.415 × 10^{-6} kPa/m, 1 lbf-in/ft = 3.707 × 10^{-4} kN/m, 1 lbf/ft = 0.0146 N/mm, 1 pound per cubic foot = 16.018 kg/m^3.

a. Values listed in Table R613.3.2 are qualification test values and are not to be used for design purposes.

b. Mean test value shall be in accordance with Section 7.6 of DOC PS 2.

c. Characteristic test value (5th percent with 75% confidence).

d. Density shall be based on oven-dry weight and oven-dry volume.

R613.3.2 Facing. Facing materials for SIPs shall be wood structural panels conforming to DOC PS 1 or DOC PS 2, each having a minimum nominal thickness of $^{7}/_{16}$ inch (11 mm) and shall meet the additional minimum properties specified in Table R613.3.2. Facing shall be identified by a grade mark or certificate of inspection issued by an approved agency.

R613.3.3 Adhesive. Adhesives used to structurally laminate the foam plastic insulation core material to the structural wood facers shall conform to ASTM D 2559 or approved alternative specifically intended for use as an adhesive used in the lamination of structural insulated panels. Each container of adhesive shall bear a label with the adhesive manufacturer's name, adhesive name and type and the name of the quality assurance agency.

R613.3.4 Lumber. The minimum lumber framing material used for SIPs prescribed in this document is NLGA graded No. 2 Spruce-pine-fir. Substitution of other wood species/grades that meet or exceed the mechanical properties and specific gravity of No. 2 Spruce-pine-fir shall be permitted.

R613.3.5 SIP screws. Screws used for the erection of SIPs as specified in Section R613.5 shall be fabricated from steel, shall be provided by the SIPs manufacturer and shall be sized to penetrate the wood member to which the assembly is being attached by a minimum of 1 inch (25 mm). The screws shall be corrosion resistant and have a minimum shank diameter of 0.188 inch (4.7 mm) and a minimum head diameter of 0.620 inch (15.5 mm).

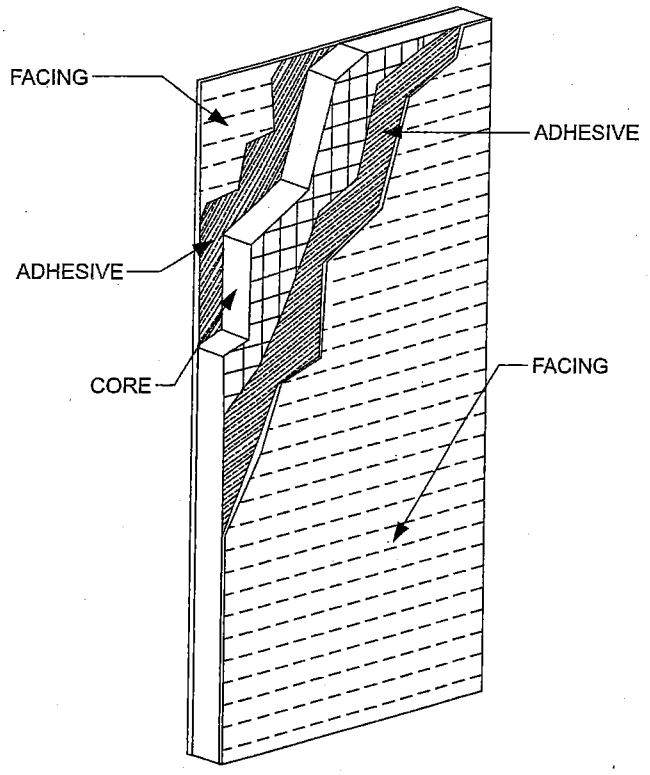

FIGURE R613.4
SIP WALL PANEL

R613.3.6 Nails. Nails specified in Section R613 shall be common or galvanized box unless otherwise stated.

R613.4 SIP wall panels. SIPs shall comply with Figure R613.4 and shall have minimum panel thickness in accordance with Tables R613.5(1) and R613.5(2) for above-grade walls. All SIPs shall be identified by grade mark or certificate of inspection issued by an approved agency.

R613.4.1 Labeling. All panels shall be identified by grade mark or certificate of inspection issued by an approved agency. Each (SIP) shall bear a stamp or label with the following minimum information:

1. Manufacturer name/logo.
2. Identification of the assembly.
3. Quality assurance agency.

R613.5 Wall construction. Exterior walls of SIP construction shall be designed and constructed in accordance with the provisions of this section and Tables R613.5(1) and R613.5(2) and Figures R613.5(1) through R613.5(5). SIP walls shall be fastened to other wood building components in accordance with Tables R602.3(1) through R602.3(4).

Framing shall be attached in accordance with Table R602.3(1) unless otherwise provided for in Section R613.

R613.5.1 Top plate connection. SIP walls shall be capped with a double top plate installed to provide overlapping at corner, intersections and splines in accordance with Figure R613.5.1. The double top plates shall be made up of a single 2 by top plate having a width equal to the width of the panel core, and shall be recessed into the SIP below. Over this top plate a cap plate shall be placed. The cap plate width shall match the SIP thickness and overlap the facers on both sides of the panel. End joints in top plates shall be offset at least 24 inches (610 mm).

R613.5.2 Bottom (sole) plate connection. SIP walls shall have full bearing on a sole plate having a width equal to the nominal width of the foam core. When SIP walls are supported directly on continuous foundations, the wall wood sill plate shall be anchored to the foundation in accordance with Figure R613.5.2 and Section R403.1.

R613.5.3 Wall bracing. SIP walls shall be braced in accordance with Section R602.10. SIP walls shall be considered continuous wood structural panel sheathing for purposes of computing required bracing. SIP walls shall meet the requirements of Section R602.10.4.2 except that SIPs corners shall be fabricated as shown in Figure R613.9. When SIP walls are used for wall bracing, the SIP bottom plate shall be attached to wood framing below in accordance with Table R602.3(1).

R613.6 Interior load-bearing walls. Interior load-bearing walls shall be constructed as specified for exterior walls.

R613.7 Drilling and notching. The maximum vertical chase penetration in SIPs shall have a maximum side dimension of 2 inches (51 mm) centered in the panel core. Vertical chases shall have a minimum spacing of 24-inches (610 mm) on center. Maximum of two horizontal chases shall be permitted in each wall panel, one at 14 inches (360 mm) from the bottom of the panel and one at mid-height of the wall panel. The

maximum allowable penetration size in a wall panel shall be circular or rectangular with a maximum dimension of 12 inches (305 mm). Overcutting of holes in facing panels shall not be permitted.

R613.8 Connection. SIPs shall be connected at vertical in-plane joints in accordance with Figure R613.8 or by other approved methods.

R613.9 Corner framing. Corner framing of SIP walls shall be constructed in accordance with Figure R613.9.

R613.10 Headers. SIP headers shall be designed and constructed in accordance with Table R613.10 and Figure R613.5.1. SIPs headers shall be continuous sections without splines. Headers shall be at least $11^{7}/_{8}$ inches (302 mm) deep. Headers longer than 4 feet (1219 mm) shall be constructed in accordance with Section R602.7.

R613.10.1 Wood structural panel box headers. Wood structural panel box headers shall be allowed where SIP headers are not applicable. Wood structural panel box headers shall be constructed in accordance with Figure R602.7.2 and Table R602.7.2.

TABLE R613.5(1)
MINIMUM THICKNESS FOR SIP WALL SUPPORTING SIP OR LIGHT-FRAME ROOF ONLY (inches)[a]

Wind Speed (3-second gust)		Snow Load (psf)	Building Width (ft)														
			24			28			32			36			40		
Exp. A/B	Exp. C		Wall Height (feet)			Wall Height (feet)			Wall Height (feet)			Wall Height (feet)			Wall Height (feet)		
			8	9	10	8	9	10	8	9	10	8	9	10	8	9	10
85	—	20	4.5	4.5	4.5	4.5	4.5	4.5	4.5	4.5	4.5	4.5	4.5	4.5	4.5	4.5	4.5
		30	4.5	4.5	4.5	4.5	4.5	4.5	4.5	4.5	4.5	4.5	4.5	4.5	4.5	4.5	4.5
		50	4.5	4.5	4.5	4.5	4.5	4.5	4.5	4.5	4.5	4.5	4.5	4.5	4.5	4.5	4.5
		70	4.5	4.5	4.5	4.5	4.5	4.5	4.5	4.5	4.5	4.5	4.5	4.5	4.5	4.5	4.5
100	85	20	4.5	4.5	4.5	4.5	4.5	4.5	4.5	4.5	4.5	4.5	4.5	4.5	4.5	4.5	4.5
		30	4.5	4.5	4.5	4.5	4.5	4.5	4.5	4.5	4.5	4.5	4.5	4.5	4.5	4.5	4.5
		50	4.5	4.5	4.5	4.5	4.5	4.5	4.5	4.5	4.5	4.5	4.5	4.5	4.5	4.5	4.5
		70	4.5	4.5	4.5	4.5	4.5	4.5	4.5	4.5	4.5	4.5	4.5	6.5	4.5	4.5	N/A
110	100	20	4.5	4.5	4.5	4.5	4.5	4.5	4.5	4.5	4.5	4.5	4.5	4.5	4.5	4.5	4.5
		30	4.5	4.5	4.5	4.5	4.5	4.5	4.5	4.5	4.5	4.5	4.5	4.5	4.5	4.5	6.5
		50	4.5	4.5	4.5	4.5	4.5	6.5	4.5	4.5	6.5	4.5	4.5	N/A	4.5	4.5	N/A
		70	4.5	4.5	6.5	4.5	4.5	N/A	4.5	4.5	N/A	4.5	6.5	N/A	4.5	N/A	N/A
120	110	20	4.5	4.5	N/A	4.5	4.5	N/A	4.5	4.5	N/A	4.5	4.5	N/A	4.5	4.5	N/A
		30	4.5	4.5	N/A	4.5	4.5	N/A	4.5	4.5	N/A	4.5	4.5	N/A	4.5	6.5	N/A
		50	4.5	4.5	N/A	4.5	6.5	N/A	4.5	N/A	N/A	4.5	N/A	N/A	4.5	N/A	N/A
		70	4.5	N/A	N/A	4.5	N/A	N/A	4.5	N/A	N/A	N/A	N/A	N/A	N/A	N/A	N/A

For SI: 1 inch = 25.4 mm, 1 foot = 304.8 mm, 1 pound per square foot = 0.0479 kPa.

N/A = Not Applicable.

a. Design assumptions:

Deflection criteria: *L*/240.

Roof load: 7 psf.

Ceiling load: 5 psf.

Wind loads based on Table R301.2 (2).

Strength axis of facing materials applied vertically.

TABLE R613.5(2)
MINIMUM THICKNESS FOR SIP WALLS SUPPORTING SIP OR LIGHT-FRAME ONE STORY AND ROOF (inches)[a]

Wind Speed (3-second gust)		Snow Load (psf)	Building Width (ft)														
			24			28			32			36			40		
Exp. A/B	Exp. C		Wall Height (feet)			Wall Height (feet)			Wall Height (feet)			Wall Height (feet)			Wall Height (feet)		
			8	9	10	8	9	10	8	9	10	8	9	10	8	9	10
85	—	20	4.5	4.5	4.5	4.5	4.5	4.5	4.5	4.5	4.5	4.5	4.5	4.5	4.5	4.5	4.5
		30	4.5	4.5	4.5	4.5	4.5	4.5	4.5	4.5	4.5	4.5	4.5	4.5	4.5	4.5	4.5
		50	4.5	4.5	4.5	4.5	4.5	4.5	4.5	4.5	4.5	4.5	4.5	4.5	4.5	4.5	N/A
		70	4.5	4.5	4.5	4.5	4.5	4.5	4.5	4.5	6.5	4.5	4.5	N/A	4.5	N/A	N/A
100	85	20	4.5	4.5	4.5	4.5	4.5	4.5	4.5	4.5	6.5	4.5	4.5	N/A	4.5	4.5	N/A
		30	4.5	4.5	4.5	4.5	4.5	4.5	4.5	4.5	N/A	4.5	4.5	N/A	4.5	N/A	N/A
		50	4.5	4.5	6.5	4.5	4.5	N/A	4.5	4.5	N/A	4.5	N/A	N/A	N/A	N/A	N/A
		70	4.5	4.5	N/A	4.5	6.5	N/A	4.5	N/A	N/A	N/A	N/A	N/A	N/A	N/A	N/A
110	100	20	4.5	4.5	N/A	4.5	4.5	N/A	4.5	6.5	N/A	4.5	N/A	N/A	N/A	N/A	N/A
		30	4.5	4.5	N/A	4.5	4.5	N/A	4.5	N/A	N/A	4.5	N/A	N/A	N/A	N/A	N/A
		50	4.5	6.5	N/A	4.5	N/A	N/A	N/A	N/A	N/A	N/A	N/A	N/A	N/A	N/A	N/A
		70	4.5	N/A	N/A	N/A	N/A	N/A	N/A	N/A	N/A	N/A	N/A	N/A	N/A	N/A	N/A
120	110	20	4.5	N/A	N/A	4.5	N/A	N/A	N/A	N/A	N/A	N/A	N/A	N/A	N/A	N/A	N/A
		30	4.5	N/A	N/A	N/A	N/A	N/A	N/A	N/A	N/A	N/A	N/A	N/A	N/A	N/A	N/A
		50	N/A	N/A	N/A	N/A	N/A	N/A	N/A	N/A	N/A	N/A	N/A	N/A	N/A	N/A	N/A
		70	N/A	N/A	N/A	N/A	N/A	N/A	N/A	N/A	N/A	N/A	N/A	N/A	N/A	N/A	N/A

For SI: 1 inch = 25.4 mm, 1 foot = 304.8 mm, 1 pound per square foot = 0.0479 kPa.
N/A = Not Applicable.
a. Design assumptions:
Deflection criteria: *L*/240.
Roof load: 7 psf.
Ceiling load: 5 psf.
Second floor live load: 30 psf.
Second floor dead load: 10 psf.
Second floor dead load from walls: 10 psf.
Wind loads based on Table R301.2(2).
Strength axis of facing materials applied vertically.

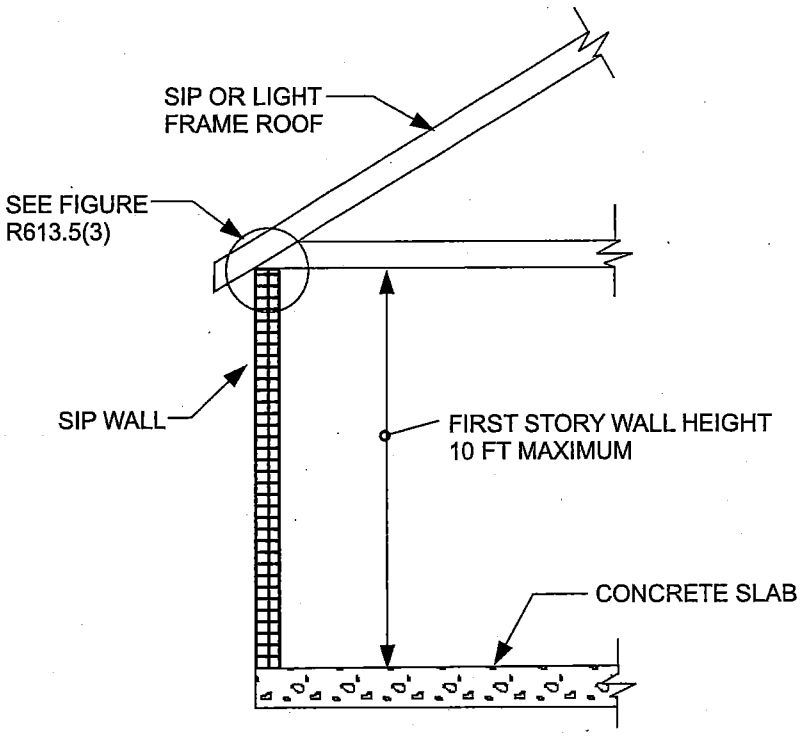

For SI: 1 foot = 304.8 mm.

FIGURE R613.5(1)
MAXIMUM ALLOWABLE HEIGHT OF SIP WALLS

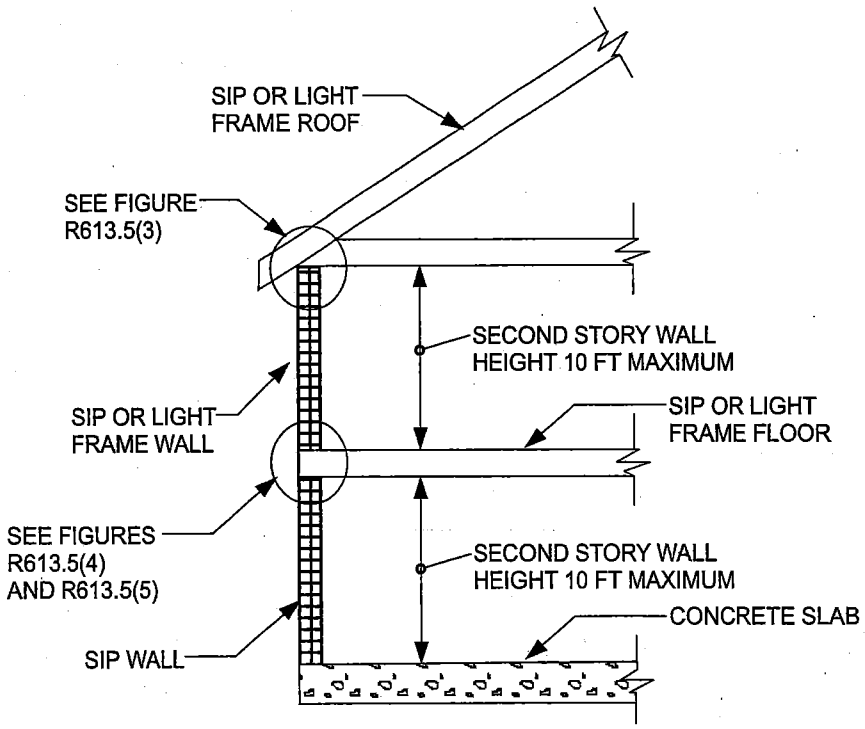

For SI: 1 foot = 304.8 mm.

FIGURE R613.5(2)
MAXIMUM ALLOWABLE HEIGHT OF SIP WALLS

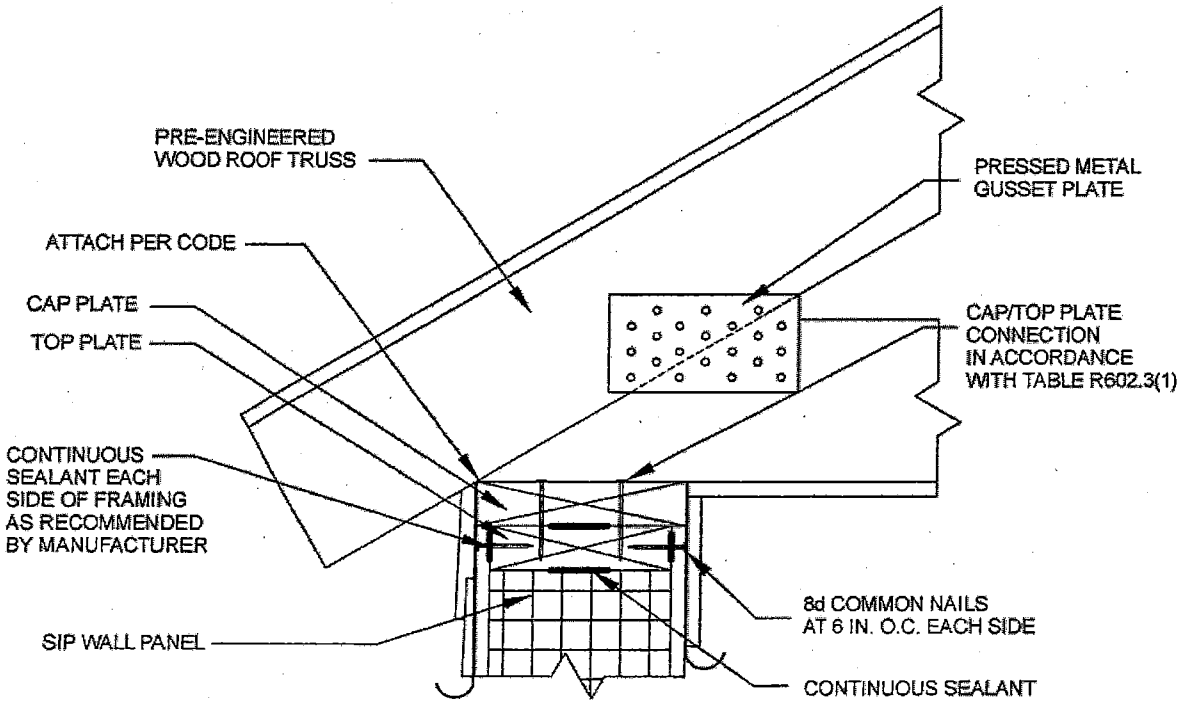

For SI: 1 inch = 25.4 mm.

FIGURE R613.5(3)
TRUSSED ROOF TO TOP PLATE CONNECTION

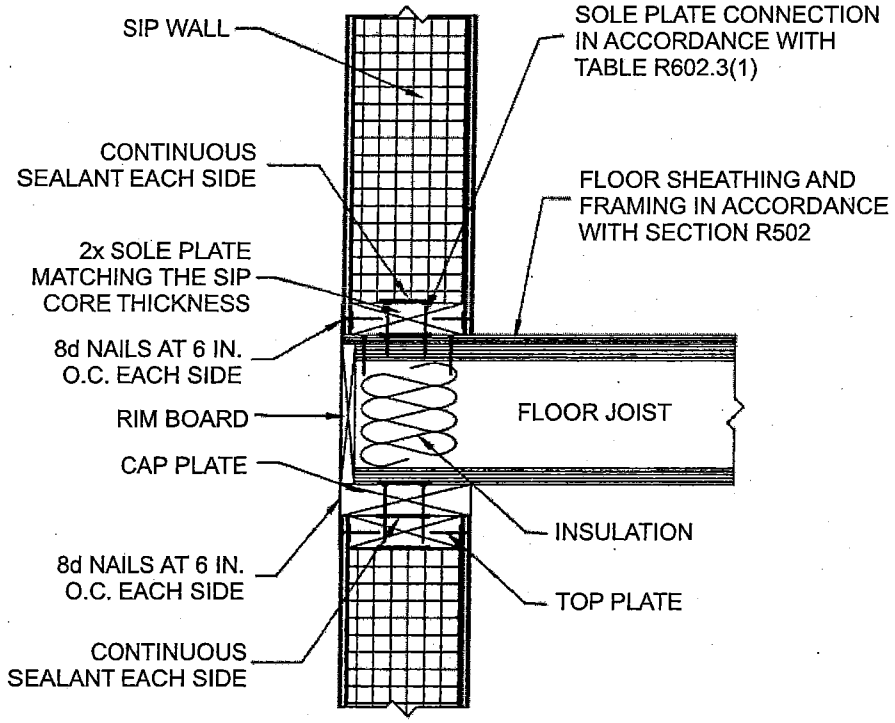

For SI: 1 inch = 25.4 mm.

Note: Figures illustrate SIP-specific attachment requirements. Other connections shall be made in accordance with Tables R602.3(1) and (2) as appropriate.

FIGURE R613.5(4)
SIP WALL-TO-WALL PLATFORM FRAME CONNECTION

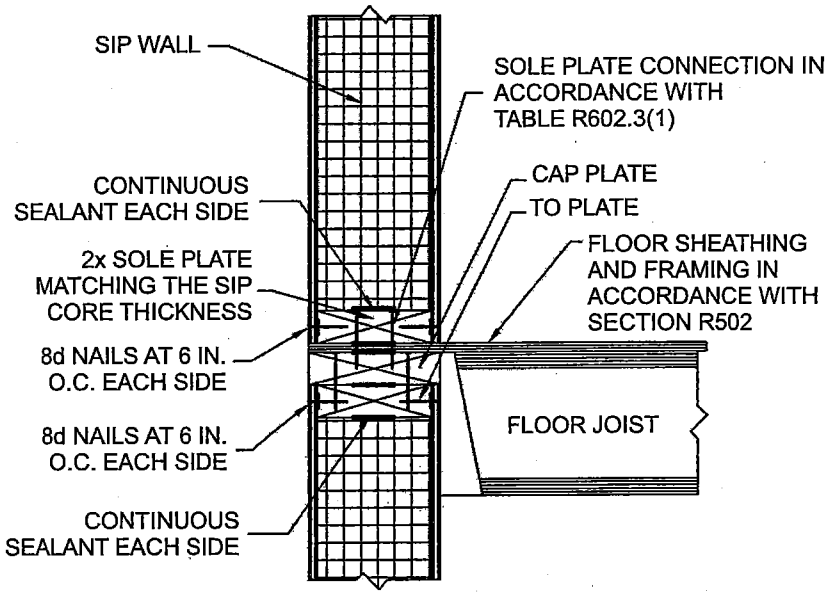

For SI: 1 inch = 25.4 mm.

Note: Figures illustrate SIP-specific attachment requirements. Other connections shall be made in accordance with Tables R602.3(1) and (2), as appropriate.

FIGURE R613.5(5)
SIP WALL-TO-WALL BALLOON FRAME CONNECTION (I-Joist floor shown for Illustration only)

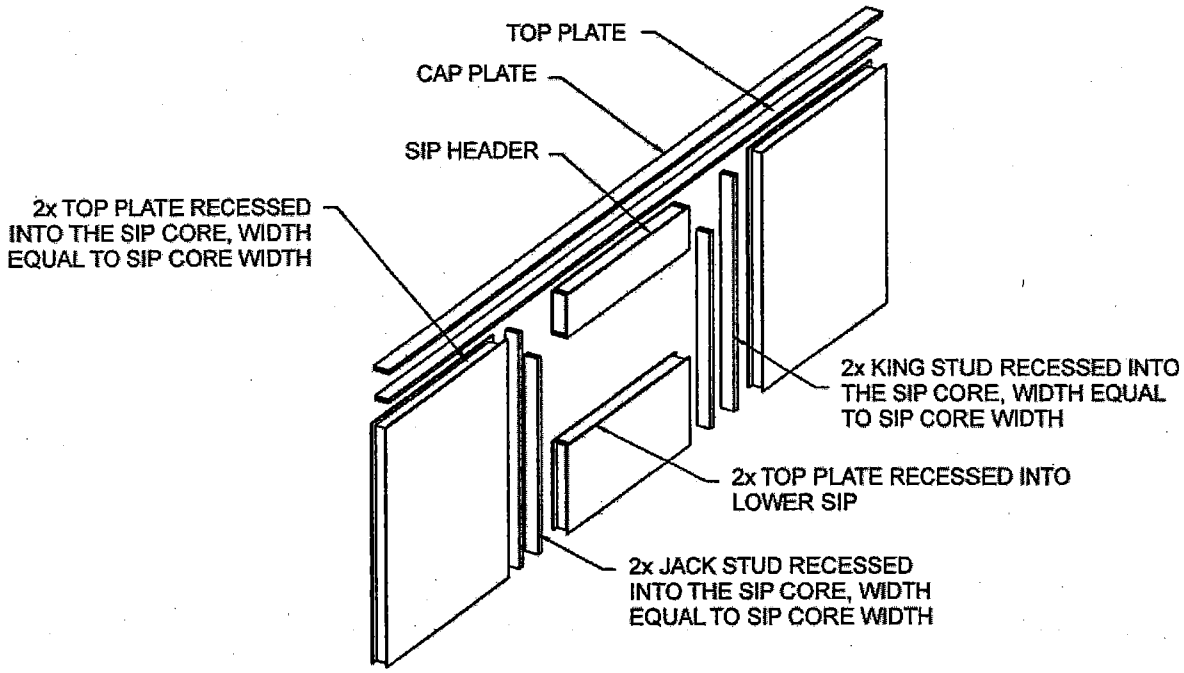

For SI: 1 inch = 25.4 mm.

Notes:

1. Top plates shall be continuous over header.
2. Lower 2x top plate shall have a width equal to the SIP core width and shall be recessed into the top edge of the panel. Cap plate shall be placed over the recessed top plate and shall have a width equal to the SIPs width.
3. SIP facing surfaces shall be nailed to framing and cripples with 8d common or galvanized box nails spaced 6 inches on center.
4. Galvanized nails shall be hot-dipped or tumbled. Framing shall be attached in accordance to Section R602.3(1) unless otherwise provide for in Section R613.

FIGURE R613.5.1
SIP WALL FRAMING CONFIGURATION

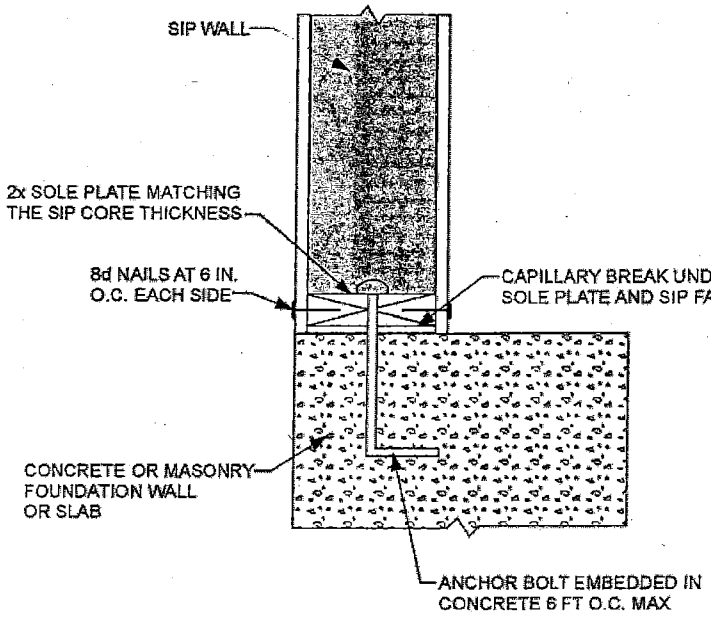

For SI: 1 inch = 25.4 mm, 1 foot = 304.8 mm.

FIGURE R613.5.2
SIP WALL TO CONCRETE SLAB FOR FOUNDATION WALL ATTACHMENT

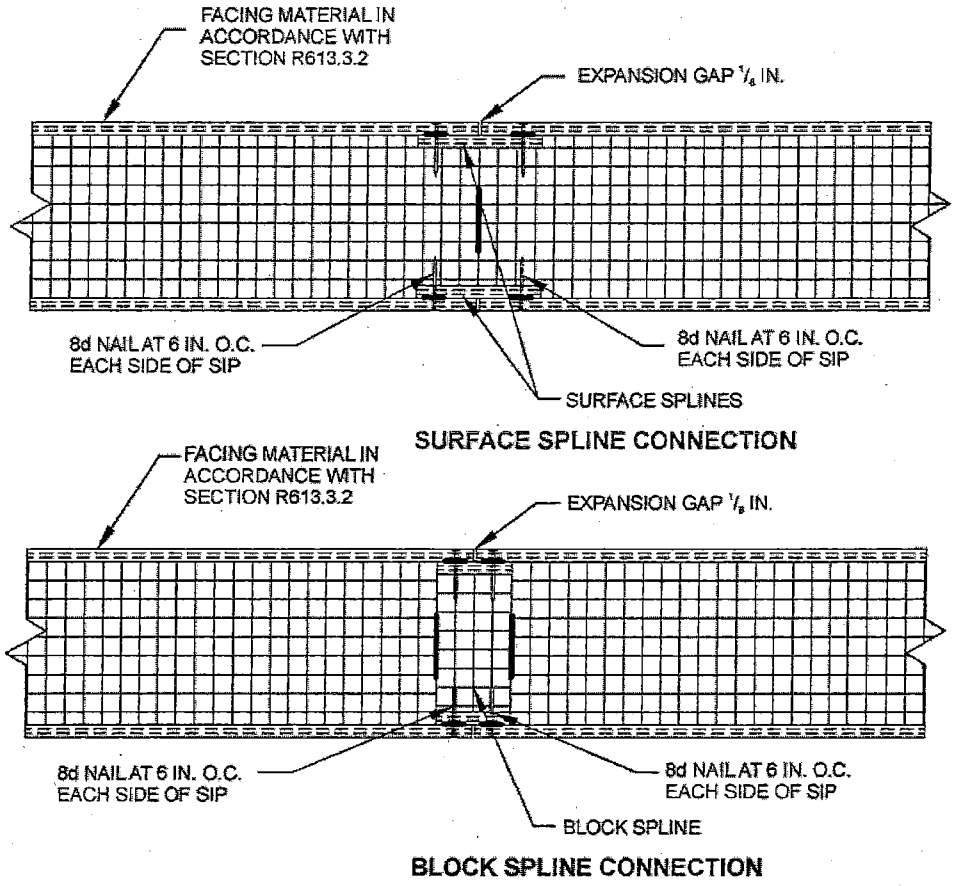

For SI: 1 inch = 25.4 mm.

FIGURE R613.8
TYPICAL SIP CONNECTION DETAILS FOR VERTICAL IN-PLANE JOINTS

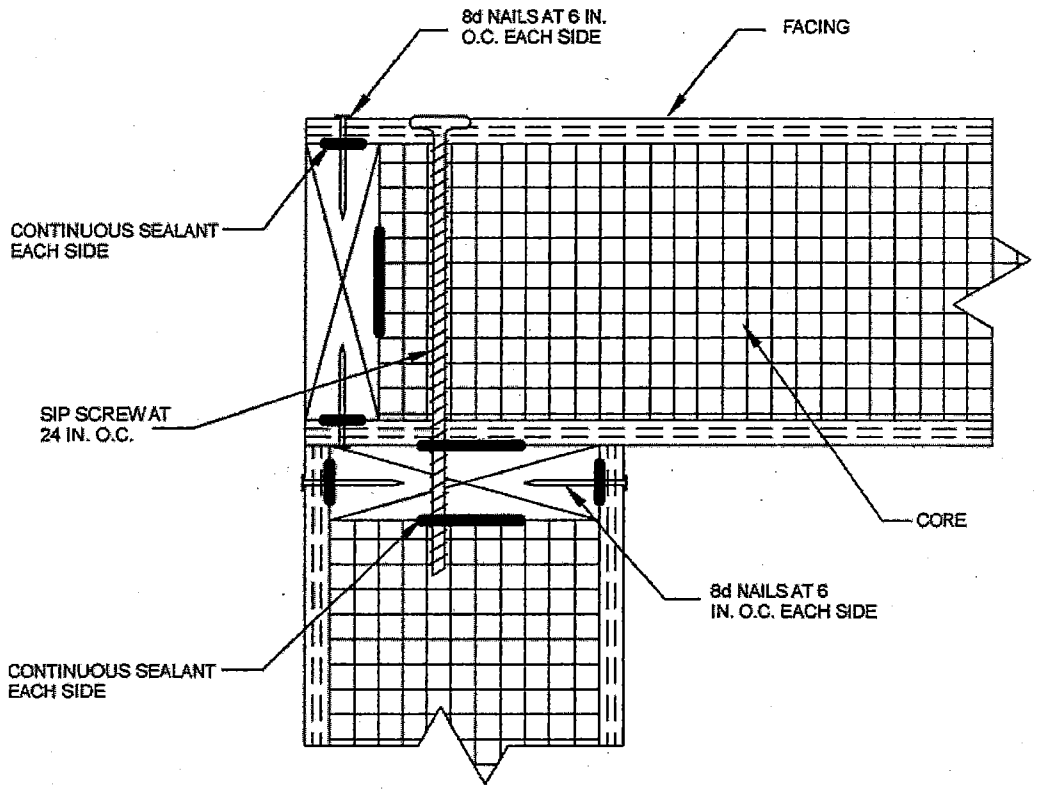

For SI: 1 inch = 25.4 mm.

FIGURE R613.9
SIP CORNER FRAMING DETAIL

TABLE R613.10
MAXIMUM SPANS FOR $11^{7}/_{8}$-INCH-DEEP SIP HEADERS (feet)[a]

LOAD CONDITION	SNOW LOAD (psf)	BUILDING width (feet)				
		24	28	32	36	40
Supporting roof only	20	4	4	4	4	2
	30	4	4	4	2	2
	50	2	2	2	2	2
	70	2	2	2	N/A	N/A
Supporting roof and one-story	20	2	2	N/A	N/A	N/A
	30	2	2	N/A	N/A	N/A
	50	2	N/A	N/A	N/A	N/A
	70	N/A	N/A	N/A	N/A	N/A

For SI: 1 inch = 25.4 mm, 1 foot = 304.8 mm, 1 pound per square foot = 0.0479 kPa.
N/A = Not Applicable.
a. Design assumptions:
Maximum deflection criterion: *L*/360.
Maximum roof dead load: 10 psf.
Maximum ceiling load: 5 psf.
Maximum second floor live load: 30 psf.
Maximum second floor dead load: 10 psf.
Maximum second floor dead load from walls: 10 psf.

CALIFORNIA RESIDENTIAL CODE – MATRIX ADOPTION TABLE
CHAPTER 7 – WALL COVERING

(Matrix Adoption Tables are non-regulatory, intended only as an aid to the user.
See Chapter 1 for state agency authority and building applications.)

Adopting agency	BSC	SFM	HCD			DSA		OSHPD				BSCC	DHS	AGR	DWR	CEC	CA	SL	SLC
			1	2	1/AC	AC	SS	1	2	3	4								
Adopt entire chapter			X	X															
Adopt entire chapter as amended (amended sections listed below)			X																
Adopt only those sections that are listed below																			
Chapter / Section																			
R702.7			X																
R702.7.1			X																
R703.1.1			X																

* The California Code of Regulations (CCR), Title 19, Division 1 provisions that are found in the *California Fire Code* are a reprint from the current CCR, Title 19, Division 1 text for the code user's convenience only. The scope, applicability and appeals procedures of CCR, Title 19, Division I remain the same.

CHAPTER 7
WALL COVERING

SECTION R701
GENERAL

R701.1 Application. The provisions of this chapter shall control the design and construction of the interior and exterior wall covering for all buildings.

R701.2 Installation. Products sensitive to adverse weather shall not be installed until adequate weather protection for the installation is provided. Exterior sheathing shall be dry before applying exterior cover.

SECTION R702
INTERIOR COVERING

R702.1 General. Interior coverings or wall finishes shall be installed in accordance with this chapter and Table R702.1(1), Table R702.1(2), Table R702.1(3) and Table R702.3.5. Interior masonry veneer shall comply with the requirements of Section R703.7.1 for support and Section R703.7.4 for anchorage, except an air space is not required. Interior finishes and materials shall conform to the flame spread and smoke-development requirements of Section R302.9.

R702.2 Interior plaster.

R702.2.1 Gypsum plaster. Gypsum plaster materials shall conform to ASTM C 5, C 22, C 28, C 35, C 59, C 61, C 587, C 631, C 847, C 933, C 1032 and C 1047, and shall be installed or applied in compliance with ASTM C 843 and C 844. Gypsum lath or gypsum base for veneer plaster shall conform to ASTM C 1396. Plaster shall not be less than three coats when applied over metal lath and not less than two coats when applied over other bases permitted by this

TABLE R702.1(1)
THICKNESS OF PLASTER

PLASTER BASE	FINISHED THICKNESS OF PLASTER FROM FACE OF LATH, MASONRY, CONCRETE (inches)	
	Gypsum Plaster	Cement Plaster
Expanded metal lath	$^5/_8$, minimum[a]	$^5/_8$, minimum[a]
Wire lath	$^5/_8$, minimum[a]	$^3/_4$, minimum (interior)[b] $^7/_8$, minimum (exterior)[b]
Gypsum lath[g]	$^1/_2$, minimum	$^3/_4$, minimum (interior)[b]
Masonry walls[c]	$^1/_2$, minimum	$^1/_2$, minimum
Monolithic concrete walls[c, d]	$^5/_8$, maximum	$^7/_8$, maximum
Monolithic concrete ceilings[c, d]	$^3/_8$, maximum[e]	$^1/_2$, maximum
Gypsum veneer base[f, g]	$^1/_{16}$, minimum	$^3/_4$, minimum (interior)[b]
Gypsum sheathing[g]	—	$^3/_4$, minimum (interior)[b] $^7/_8$, minimum (exterior)[b]

For SI: 1 inch = 25.4 mm.

a. When measured from back plane of expanded metal lath, exclusive of ribs, or self-furring lath, plaster thickness shall be $^3/_4$ inch minimum.

b. When measured from face of support or backing.

c. Because masonry and concrete surfaces may vary in plane, thickness of plaster need not be uniform.

d. When applied over a liquid bonding agent, finish coat may be applied directly to concrete surface.

e. Approved acoustical plaster may be applied directly to concrete or over base coat plaster, beyond the maximum plaster thickness shown.

f. Attachment shall be in accordance with Table R702.3.5.

g. Where gypsum board is used as a base for cement plaster, a water-resistive barrier complying with Section R703.2 shall be provided.

section, except that veneer plaster may be applied in one coat not to exceed $^3/_{16}$ inch (4.76 mm) thickness, provided the total thickness is in accordance with Table R702.1(1).

R702.2.2 Cement plaster. Cement plaster materials shall conform to ASTM C 91 (Type M, S or N), C 150 (Type I, II and III), C 595 [Type IP, I (PM), IS and I (SM), C 847, C 897, C 926, C 933, C 1032, C 1047 and C 1328, and shall be installed or applied in compliance with ASTM C 1063. Gypsum lath shall conform to ASTM C 1396. Plaster shall not be less than three coats when applied over metal lath and not less than two coats when applied over other bases permitted by this section, except that veneer plaster may be applied in one coat not to exceed $^3/_{16}$ inch (4.76 mm) thickness, provided the total thickness is in accordance with Table R702.1(1).

R702.2.2.1 Application. Each coat shall be kept in a moist condition for at least 24 hours prior to application of the next coat.

Exception: Applications installed in accordance with ASTM C 926.

R702.2.2.2 Curing. The finish coat for two-coat cement plaster shall not be applied sooner than 48 hours after application of the first coat. For three coat cement plaster the second coat shall not be applied sooner than 24 hours after application of the first coat. The finish coat for three-coat cement plaster shall not be applied sooner than 48 hours after application of the second coat.

R702.2.3 Support. Support spacing for gypsum or metal lath on walls or ceilings shall not exceed 16 inches (406 mm) for $^3/_8$-inch-thick (9.5 mm) or 24 inches (610 mm) for $^1/_2$-inch-thick (12.7 mm) plain gypsum lath. Gypsum lath shall be installed at right angles to support framing with end joints in adjacent courses staggered by at least one framing space.

R702.3 Gypsum board.

R702.3.1 Materials. All gypsum board materials and accessories shall conform to ASTM C 22, C 475, C 514, C 1002, C 1047, C 1177, C 1178, C 1278, C 1396 or C 1658 and shall be installed in accordance with the provisions of

TABLE R702.1(2)
GYPSUM PLASTER PROPORTIONS[a]

NUMBER	COAT	PLASTER BASE OR LATH	MAXIMUM VOLUME AGGREGATE PER 100 POUNDS NEAT PLASTER[b] (cubic feet)	
			Damp Loose Sand[a]	Perlite or Vermiculite[c]
Two-coat work	Base coat	Gypsum lath	2.5	2
	Base coat	Masonry	3	3
Three-coat work	First coat	Lath	2[d]	2
	Second coat	Lath	3[d]	2[e]
	First and second coats	Masonry	3	3

For SI: 1 inch = 25.4 mm, 1 cubic foot = 0.0283 m^3, 1 pound = 0.454 kg.

a. Wood-fibered gypsum plaster may be mixed in the proportions of 100 pounds of gypsum to not more than 1 cubic foot of sand where applied on masonry or concrete.

b. When determining the amount of aggregate in set plaster, a tolerance of 10 percent shall be allowed.

c. Combinations of sand and lightweight aggregate may be used, provided the volume and weight relationship of the combined aggregate to gypsum plaster is maintained.

d. If used for both first and second coats, the volume of aggregate may be 2.5 cubic feet.

e. Where plaster is 1 inch or more in total thickness, the proportions for the second coat may be increased to 3 cubic feet.

TABLE R702.1(3)
CEMENT PLASTER PROPORTIONS, PARTS BY VOLUME

COAT	CEMENT PLASTER TYPE	CEMENTITIOUS MATERIALS				VOLUME OF AGGREGATE PER SUM OF SEPARATE VOLUMES OF CEMENTITIOUS MATERIALS[b]
		Portland Cement Type I, II or III or Blended Cement Type IP, I (PM), IS or I (SM)	Plastic Cement	Masonry Cement Type M, S or N	Lime	
First	Portland or blended	1			$^3/_4$ - 1 $^1/_2$[a]	2 $^1/_2$ - 4
	Masonry				1	2 $^1/_2$ - 4
	Plastic		1			2 $^1/_2$ - 4
Second	Portland or blended	1			$^3/_4$ - 1 $^1/_2$	3 - 5
	Masonry			1		3 - 5
	Plastic		1			3 - 5
Finish	Portland or blended	1			$^3/_4$ - 2	1 $^1/_2$ - 3
	Masonry			1		1 $^1/_2$ - 3
	Plastic		1			1 $^1/_2$ - 3

For SI: 1 inch = 25.4 mm, 1 pound = 0.545 kg.

a. Lime by volume of 0 to 3/4 shall be used when the plaster will be placed over low-absorption surfaces such as dense clay tile or brick.

b. The same or greater sand proportion shall be used in the second coat than used in the first coat.

this section. Adhesives for the installation of gypsum board shall conform to ASTM C 557.

R702.3.2 Wood framing. Wood framing supporting gypsum board shall not be less than 2 inches (51 mm) nominal thickness in the least dimension except that wood furring strips not less than 1-inch by 2-inch (25 mm by 51 mm) nominal dimension may be used over solid backing or framing spaced not more than 24 inches (610 mm) on center.

R702.3.3 Cold-formed steel framing. Cold-formed steel framing supporting gypsum board shall not be less than $1^1/_4$ inches (32 mm) wide in the least dimension. Nonload-bearing cold-formed steel framing shall comply with ASTM C 645. Load-bearing cold-formed steel framing and all cold-formed steel framing from 0.033 inch to 0.112 inch (1 mm to 3 mm) thick shall comply with ASTM C 955.

R702.3.4 Insulating concrete form walls. Foam plastics for insulating concrete form walls constructed in accordance with Sections R404.1.2 and R611 on the interior of habitable spaces shall be protected in accordance with Section R316.4. Use of adhesives in conjunction with mechanical fasteners is permitted. Adhesives used for interior and exterior finishes shall be compatible with the insulating form materials.

R702.3.5 Application. Maximum spacing of supports and the size and spacing of fasteners used to attach gypsum board shall comply with Table R702.3.5. Gypsum sheathing shall be attached to exterior walls in accordance with Table R602.3(1). Gypsum board shall be applied at right angles or parallel to framing members. All edges and ends of gypsum board shall occur on the framing members, except those edges and ends that are perpendicular to the framing members. Interior gypsum board shall not be installed where it is directly exposed to the weather or to water.

TABLE R702.3.5
MINIMUM THICKNESS AND APPLICATION OF GYPSUM BOARD

THICKNESS OF GYPSUM BOARD (inches)	APPLICATION	ORIENTATION OF GYPSUM BOARD TO FRAMING	MAXIMUM SPACING OF FRAMING MEMBERS (inches o.c.)	MAXIMUM SPACING OF FASTENERS (inches)		SIZE OF NAILS FOR APPLICATION TO WOOD FRAMING[c]
				Nails[a]	Screws[b]	
Application without adhesive						
$^3/_8$	Ceiling[d]	Perpendicular	16	7	12	13 gage, $1^1/_4$″ long, $^{19}/_{64}$″ head; 0.098″ diameter, $1^1/_4$″ long, annular-ringed; or 4d cooler nail, 0.080″ diameter, $1^3/_8$″ long, $^7/_{32}$″ head.
	Wall	Either direction	16	8	16	
$^1/_2$	Ceiling	Either direction	16	7	12	13 gage, $1^3/_8$″ long, $^{19}/_{64}$″ head; 0.098″ diameter, $1^1/_4$″ long, annular-ringed; 5d cooler nail, 0.086″ diameter, $1^5/_8$″ long, $^{15}/_{64}$″ head; or gypsum board nail, 0.086? diameter, $1^5/_8$″ long, $^9/_{32}$″ head.
	Ceiling[d]	Perpendicular	24	7	12	
	Wall	Either direction	24	8	12	
	Wall	Either direction	16	8	16	
$^5/_8$	Ceiling	Either direction	16	7	12	13 gage, $1^5/_8$″ long, $^{19}/_{64}$″ head; 0.098″ diameter, $1^3/_8$″ long, annular-ringed; 6d cooler nail, 0.092″ diameter, $1^7/_8$″ long, $^1/_4$″ head; or gypsum board nail, 0.0915″ diameter, $1^7/_8$″ long, $^{19}/_{64}$″ head.
	Ceiling[e]	Perpendicular	24	7	12	
	Wall	Either direction	24	8	12	
	Wall	Either direction	16	8	16	
Application with adhesive						
$^3/_8$	Ceiling[d]	Perpendicular	16	16	16	Same as above for $^3/_8$″ gypsum board
	Wall	Either direction	16	16	24	
$^1/_2$ or $^5/_8$	Ceiling	Either direction	16	16	16	Same as above for $^1/_2$″ and $^5/_8$″ gypsum board, respectively
	Ceiling[d]	Perpendicular	24	12	16	
	Wall	Either direction	24	16	24	
Two $^3/_8$ layers	Ceiling	Perpendicular	16	16	16	Base ply nailed as above for $^1/_2$″ gypsum board; face ply installed with adhesive
	Wall	Either direction	24	24	24	

For SI: 1 inch = 25.4 mm.

a. For application without adhesive, a pair of nails spaced not less than 2 inches apart or more than $2^1/_2$ inches apart may be used with the pair of nails spaced 12 inches on center.

b. Screws shall be in accordance with Section R702.3.6. Screws for attaching gypsum board to structural insulated panels shall penetrate the wood structural panel facing not less than $^7/_{16}$ inch.

c. Where cold-formed steel framing is used with a clinching design to receive nails by two edges of metal, the nails shall be not less than $^5/_8$ inch longer than the gypsum board thickness and shall have ringed shanks. Where the cold-formed steel framing has a nailing groove formed to receive the nails, the nails shall have barbed shanks or be 5d, $13^1/_2$ gage, $^{15}/_8$ inches long, $^{15}/_{64}$-inch head for $^1/_2$-inch gypsum board; and 6d, 13 gage, $1^7/_8$ inches long, $^{15}/_{64}$-inch head for $^5/_8$-inch gypsum board.

d. Three-eighths-inch-thick single-ply gypsum board shall not be used on a ceiling where a water-based textured finish is to be applied, or where it will be required to support insulation above a ceiling. On ceiling applications to receive a water-based texture material, either hand or spray applied, the gypsum board shall be applied perpendicular to framing. When applying a water-based texture material, the minimum gypsum board thickness shall be increased from $^3/_8$ inch to $^1/_2$ inch for 16-inch on center framing, and from $^1/_2$ inch to $^5/_8$ inch for 24-inch on center framing or $^1/_2$-inch sag-resistant gypsum ceiling board shall be used.

e. Type X gypsum board for garage ceilings beneath habitable rooms shall be installed perpendicular to the ceiling framing and shall be fastened at maximum 6 inches o.c. by minimum $1^7/_8$ inches 6d coated nails or equivalent drywall screws.

R702.3.6 Fastening. Screws for attaching gypsum board to wood framing shall be Type W or Type S in accordance with ASTM C 1002 and shall penetrate the wood not less than $^5/_8$ inch (16 mm). Gypsum board shall be attached to cold-formed steel framing with minimum No. 6 screws. Screws for attaching gypsum board to cold-formed steel framing less than 0.033 inch (1 mm) thick shall be Type S in accordance with ASTM C 1002 or bugle head style in accordance with ASTM C 1513 and shall penetrate the steel not less than $^3/_8$ inch (9.5 mm). Screws for attaching gypsum board to cold-formed steel framing 0.033 inch to 0.112 inch (1 mm to 3 mm) thick shall be in accordance with ASTM C 954 or bugle head style in accordance with ASTM C 1513. Screws for attaching gypsum board to structural insulated panels shall penetrate the wood structural panel facing not less than $^7/_{16}$ inch (11 mm).

R702.3.7 Horizontal gypsum board diaphragm ceilings. Use of gypsum board shall be permitted on wood joists to create a horizontal diaphragm in accordance with Table R702.3.7. Gypsum board shall be installed perpendicular to ceiling framing members. End joints of adjacent courses of board shall not occur on the same joist. The maximum allowable diaphragm proportions shall be $1^1/_2$:1 between shear resisting elements. Rotation or cantilever conditions shall not be permitted. Gypsum board shall not be used in diaphragm ceilings to resist lateral forces imposed by masonry or concrete construction. All perimeter edges shall be blocked using wood members not less than 2-inch by 6-inch (51 mm by 152 mm) nominal dimension. Blocking material shall be installed flat over the top plate of the wall to provide a nailing surface not less than 2 inches (51 mm) in width for the attachment of the gypsum board.

R702.3.8 Water-resistant gypsum backing board. Gypsum board used as the base or backer for adhesive application of ceramic tile or other required nonabsorbent finish material shall conform to ASTM C 1396, C 1178 or C1278. Use of water-resistant gypsum backing board shall be permitted on ceilings where framing spacing does not exceed 12 inches (305 mm) on center for $^1/_2$-inch-thick (12.7 mm) or 16 inches (406 mm) for $^5/_8$-inch-thick (16 mm) gypsum board. Water-resistant gypsum board shall not be installed over a Class I or II vapor retarder in a shower or tub compartment. Cut or exposed edges, including those at wall intersections, shall be sealed as recommended by the manufacturer.

R702.3.8.1 Limitations. Water resistant gypsum backing board shall not be used where there will be direct exposure to water, or in areas subject to continuous high humidity.

R702.4 Ceramic tile.

R702.4.1 General. Ceramic tile surfaces shall be installed in accordance with ANSI A108.1, A108.4, A108.5, A108.6, A108.11, A118.1, A118.3, A136.1 and A137.1.

R702.4.2 Fiber-cement, fiber-mat reinforced cementitious backer units, glass mat gypsum backers and fiber-reinforced gypsum backers. Fiber-cement, fiber-mat reinforced cementitious backer units, glass mat gypsum backers or fiber-reinforced gypsum backers in compliance with ASTM C 1288, C 1325, C 1178 or C 1278, respectively, and installed in accordance with manufacturers' recommendations shall be used as backers for wall tile in tub and shower areas and wall panels in shower areas.

R702.5 Other finishes. Wood veneer paneling and hardboard paneling shall be placed on wood or cold-formed steel framing spaced not more than 16 inches (406 mm) on center. Wood veneer and hard board paneling less than $^1/_4$-inch (6 mm) nominal thickness shall not have less than a $^3/_8$-inch (10 mm) gypsum board backer. Wood veneer paneling not less than $^1/_4$-inch (6 mm) nominal thickness shall conform to ANSI/HPVA HP-1. Hardboard paneling shall conform to CPA/ANSI A135.5.

R702.6 Wood shakes and shingles. Wood shakes and shingles shall conform to CSSB *Grading Rules for Wood Shakes and Shingles* and shall be permitted to be installed directly to the studs with maximum 24 inches (610 mm) on-center spacing.

R702.6.1 Attachment. Nails, staples or glue are permitted for attaching shakes or shingles to the wall, and attachment of the shakes or shingles directly to the surface shall be permitted provided the fasteners are appropriate for the type of wall surface material. When nails or staples are used, two fasteners shall be provided and shall be placed so that they are covered by the course above.

TABLE R702.3.7
SHEAR CAPACITY FOR HORIZONTAL WOOD-FRAMED GYPSUM BOARD DIAPHRAGM CEILING ASSEMBLIES

MATERIAL	THICKNESS OF MATERIAL (min.) (inch)	SPACING OF FRAMING MEMBERS (max.) (inch)	SHEAR VALUE[a, b] (plf of ceiling)	MINIMUM FASTENER SIZE[c, d]
Gypsum board	$^1/_2$	16 o.c.	90	5d cooler or wallboard nail; $1^5/_8$-inch long; 0.086-inch shank; $^{15}/_{64}$-inch head
Gypsum board	$^1/_2$	24 o.c.	70	5d cooler or wallboard nail; $1^5/_8$-inch long; 0.086-inch shank; $^{15}/_{64}$-inch head

For SI: 1 inch = 25.4 mm, 1 pound per linear foot = 1.488 kg/m.

a. Values are not cumulative with other horizontal diaphragm values and are for short-term loading caused by wind or seismic loading. Values shall be reduced 25 percent for normal loading.

b. Values shall be reduced 50 percent in Seismic Design Categories D_0, D_1, D_2 and E.

c. $1^1/_4$-inch, #6 Type S or W screws may be substituted for the listed nails.

d. Fasteners shall be spaced not more than 7 inches on center at all supports, including perimeter blocking, and not less than $^3/_8$ inch from the edges and ends of the gypsum board.

R702.6.2 Furring strips. Where furring strips are used, they shall be 1 inch by 2 inches or 1 inch by 3 inches (25 mm by 51 mm or 25 mm by 76 mm), spaced a distance on center equal to the desired exposure, and shall be attached to the wall by nailing through other wall material into the studs.

** **R702.7 Vapor retarders.** Class I or II vapor retarders are required on the interior side of frame walls in Climate Zones || *14 and 16. See Title 24, Part 6, Figure 100.1-A —California Climate Zones.*

Exceptions:

1. Basement walls.
2. Below grade portion of any wall.
3. Construction where moisture or its freezing will not damage the materials.

R702.7.1 Class III vapor retarders. Class III vapor retarders shall be permitted where any one *the following materials are used. The material options include vented cladding over fiberboard, vented cladding over gypsum, or insulated sheathing with an R value equal to or greater than R-4. If insulated sheathing is used the R-value shall be included as part of the compliance toward Title 24, Part 6 Building Energy Efficiency Standards.*

Spray foam with a minimum density of 2 lb/ft³ applied to the interior cavity side of OSB, plywood, fiberboard, insulated sheathing or gypsum is deemed to meet the insulated sheathing requirement where the spray foam R-value meets or exceeds the specified insulated sheathing R-value.

R702.7.2 Material vapor retarder class. The vapor retarder class shall be based on the manufacturer's certified testing or a tested assembly.

The following shall be deemed to meet the class specified:

Class I: Sheet polyethylene, unperforated aluminum foil.

Class II: Kraft-faced fiberglass batts.

Class III: Latex or enamel paint.

R702.7.3 Minimum clear air spaces and vented openings for vented cladding. For the purposes of this section, vented cladding shall include the following minimum clear air spaces. Other openings with the equivalent vent area shall be permitted.

1. Vinyl lap or horizontal aluminum siding applied over a weather resistive barrier as specified in Table R703.4.
2. Brick veneer with a clear airspace as specified in Table R703.7.4.
3. Other approved vented claddings.

SECTION R703
EXTERIOR COVERING

R703.1 General. Exterior walls shall provide the building with a weather-resistant exterior wall envelope. The exterior wall envelope shall include flashing as described in Section R703.8.

R703.1.1 Water resistance. The exterior wall envelope shall be designed and constructed in a manner that prevents the accumulation of water within the wall assembly by providing a water-resistant barrier behind the exterior veneer as required by Section R703.2 and a means of draining to the exterior water that enters the assembly. Protection against condensation in the exterior wall assembly shall be provided in accordance with *the California Energy Code.*

Exceptions:

1. A weather-resistant exterior wall envelope shall not be required over concrete or masonry walls designed in accordance with Chapter 6 and flashed according to Section R703.7 or R703.8.
2. Compliance with the requirements for a means of drainage, and the requirements of Sections R703.2 and R703.8, shall not be required for an exterior wall envelope that has been demonstrated to resist wind-driven rain through testing of the exterior wall envelope, including joints, penetrations and intersections with dissimilar materials, in accordance with ASTM E 331 under the following conditions:
   2.1. Exterior wall envelope test assemblies shall include at least one opening, one control joint, one wall/eave interface and one wall sill. All tested openings and penetrations shall be representative of the intended end-use configuration.
   2.2. Exterior wall envelope test assemblies shall be at least 4 feet by 8 feet (1219 mm by 2438 mm) in size.
   2.3. Exterior wall assemblies shall be tested at a minimum differential pressure of 6.24 pounds per square foot (299 Pa).
   2.4. Exterior wall envelope assemblies shall be subjected to the minimum test exposure for a minimum of 2 hours.

The exterior wall envelope design shall be considered to resist wind-driven rain where the results of testing indicate that water did not penetrate control joints in the exterior wall envelope, joints at the perimeter of openings penetration or intersections of terminations with dissimilar materials.

R703.1.2 Wind resistance. Wall coverings, backing materials and their attachments shall be capable of resisting wind loads in accordance with Tables R301.2(2) and R301.2(3). Wind-pressure resistance of the siding and backing materials shall be determined by ASTM E 330 or other applicable standard test methods. Where wind-pressure resistance is determined by design analysis, data from approved design standards and analysis conforming to generally accepted engineering practice shall be used to evaluate the siding and backing material and its fastening. All applicable failure modes including bending rupture of siding, fastener withdrawal and fastener head pull-through shall be considered in the testing or design analysis. Where the wall covering and the backing material resist wind load as an assembly, use of the design capacity of the assembly shall be permitted.

R703.2 Water-resistive barrier. One layer of No. 15 asphalt felt, free from holes and breaks, complying with ASTM D 226 for Type 1 felt or other approved water-resistive barrier shall be applied over studs or sheathing of all exterior walls. Such felt or material shall be applied horizontally, with the upper layer lapped over the lower layer not less than 2 inches (51 mm). Where joints occur, felt shall be lapped not less than 6 inches (152 mm). The felt or other approved material shall be continuous to the top of walls and terminated at penetrations and building appendages in a manner to meet the requirements of the exterior wall envelope as described in Section R703.1.

Exception: Omission of the water-resistive barrier is permitted in the following situations:

1. In detached accessory buildings.
2. Under exterior wall finish materials as permitted in Table R703.4.
3. Under paperbacked stucco lath when the paper backing is an approved water-resistive barrier.

R703.3 Wood, hardboard and wood structural panel siding.

R703.3.1 Panel siding. Joints in wood, hardboard or wood structural panel siding shall be made as follows unless otherwise approved. Vertical joints in panel siding shall occur over framing members, unless wood or wood structural panel sheathing is used, and shall be shiplapped or covered with a batten. Horizontal joints in panel siding shall be lapped a minimum of 1 inch (25 mm) or shall be shiplapped or shall be flashed with Z-flashing and occur over solid blocking, wood or wood structural panel sheathing.

R703.3.2 Horizontal siding. Horizontal lap siding shall be installed in accordance with the manufacturer's recommendations. Where there are no recommendations the siding shall be lapped a minimum of 1 inch (25 mm), or $^1/_2$ inch (13 mm) if rabbeted, and shall have the ends caulked, covered with a batten or sealed and installed over a strip of flashing.

R703.4 Attachments. Unless specified otherwise, all wall coverings shall be securely fastened in accordance with Table R703.4 or with other approved aluminum, stainless steel, zinc-coated or other approved corrosion-resistive fasteners. Where the basic wind speed in accordance with Figure R301.2(4)A is 110 miles per hour (49 m/s) or higher, the attachment of wall coverings shall be designed to resist the component and cladding loads specified in Table R301.2(2), adjusted for height and exposure in accordance with Table R301.2(3).

R703.5 Wood shakes and shingles. Wood shakes and shingles shall conform to CSSB *Grading Rules for Wood Shakes and Shingles.*

R703.5.1 Application. Wood shakes or shingles shall be applied either single-course or double-course over nominal $^1/_2$-inch (13 mm) wood-based sheathing or to furring strips over $^1/_2$-inch (13 mm) nominal nonwood sheathing . A permeable water-resistive barrier shall be provided over all sheathing, with horizontal overlaps in the membrane of not less than 2 inches (51 mm) and vertical overlaps of not less than 6 inches (152 mm). Where furring strips are used, they shall be 1 inch by 3 inches or 1 inch by 4 inches (25 mm by 76 mm or 25 mm by 102 mm) and shall be fastened horizontally to the studs with 7d or 8d box nails and shall be spaced a distance on center equal to the actual weather exposure of the shakes or shingles, not to exceed the maximum exposure specified in Table R703.5.2. The spacing between adjacent shingles to allow for expansion shall not exceed $^1/_4$ inch (6 mm), and between adjacent shakes, it shall not exceed $^1/_2$ inch (13 mm). The offset spacing between joints in adjacent courses shall be a minimum of $1^1/_2$ inches (38 mm).

R703.5.2 Weather exposure. The maximum weather exposure for shakes and shingles shall not exceed that specified in Table R703.5.2.

TABLE R703.5.2
MAXIMUM WEATHER EXPOSURE FOR WOOD SHAKES AND SHINGLES ON EXTERIOR WALLS[a, b, c]
(Dimensions are in inches)

LENGTH	EXPOSURE FOR SINGLE COURSE	EXPOSURE FOR DOUBLE COURSE
Shingles[a]		
16	$7^1/_2$	12[b]
18	$8^1/_2$	14[c]
24	$11^1/_2$	16
Shakes[a]		
18	$8^1/_2$	14
24	$11^1/_2$	18

For SI: 1 inch = 25.4 mm.

a. Dimensions given are for No. 1 grade.

b. A maximum 10-inch exposure is permitted for No. 2 grade.

c. A maximum 11-inch exposure is permitted for No. 2 grade.

TABLE R703.4
WEATHER-RESISTANT SIDING ATTACHMENT AND MINIMUM THICKNESS

SIDING MATERIAL		NOMINAL THICKNESS[a] (Inches)	JOINT TREATMENT	WATER-RESISTIVE BARRIER REQUIRED	TYPE OF SUPPORTS FOR THE SIDING MATERIAL AND FASTENERS[b, c, d]					
					Wood or wood structural panel sheathing into stud	Fiberboard sheathing into stud	Gypsum sheathing into stud	Foam plastic sheathing into stud	Direct to studs	Number or spacing of fasteners
Horizonal aluminum[e]	Without insulation	0.019[f] 0.024	Lap	Yes	0.120 nail $1^1/_2$″ long	0.120 nail 2″ long	0.120 nail 2″ long	0.120 nail[y]	Not allowed	Same as stud spacing
			Lap	Yes	0.120 nail $1^1/_2$″ long	0.120 nail 2″ long	0.120 nail 2″ long	0.120 nail[y]	Not allowed	
	With insulation	0.019	Lap	Yes	0.120 nail $1^1/_2$″ long	0.120 nail $2^1/_2$″ long	0.120 nail $2^1/_2$″ long	0.120 nail[y]	0.120 nail $1^1/_2$″ long	
Anchored veneer: brick, concrete, masonry or stone		2	Section R703	Yes	See Section R703 and Figure R703.7[g]					
Adhered veneer: concrete, stone or masonry[w]		—	Section R703	Yes Note w	See Section R703.6.1[g] or in accordance with the manufacturer's instructions.					
Hardboard[k] Panel siding-vertical		$^7/_{16}$	—	Yes	Note m	Note m	Note m	Note m	Note m	6″ panel edges 12″ inter. sup.[n]
Hardboard[k] Lap-siding-horizontal		$^7/_{16}$	Note p	Yes	Note o	Note o	Note o	Note o	Note o	Same as stud spacing 2 per bearing
Steel[h]		29 ga.	Lap	Yes	0.113 nail $1^3/_4$″ Staple-$1^3/_4$″	0.113 nail $2^3/_4$″ Staple-$2^1/_2$″	0.113 nail $2^1/_2$″ Staple-$2^1/_4$″	0.113 nail[v] Staple[v]	Not allowed	Same as stud spacing
Particleboard panels		$^3/_8$ - $^1/_2$	—	Yes	6d box nail (2″ × 0.099″)	6d box nail (2″ × 0.099″)	6d box nail (2″ × 0.099″)	box nail[v]	6d box nail (2″ × 0.099″), $^3/_8$ not allowed	6″ panel edge, 12" inter. sup.
		$^5/_8$	—	Yes	6d box nail (2″ × 0.099″)	8d box nail ($2^1/_2$″ × 0.113″)	8d box nail ($2^1/_2$″ × 0.113″)	box nail[v]	6d box nail (2″" × 0.099″)	
Wood structural panel[i] ANSI/APA-PRP 210 siding[i] (exterior grade)		$^3/_8$ - $^1/_2$	Note p	Yes	0.099 nail-2″	0.113 nail-$2^1/_2$″	0.113 nail-$2^1/_2$″	0.113 nail[v]	0.099 nail-2″	6″ panel edges, 12″ inter. sup.
Wood structural panel lapsiding		$^3/_8$ - $^1/_2$	Note p Note x	Yes	0.099 nail-2″	0.113 nail-$2^1/_2$″	0.113 nail-$2^1/_2$″	0.113 nail[x]	0.099 nail-2″	8″ along bottom edge
Vinyl siding[l]		0.035	Lap	Yes	0.120 nail (shank) with a 0.313 head or 16-gage staple with $^3/_8$ to $^1/_2$-inch crown[y, z]	0.120 nail (shank) with a 0.313 head or 16-gage staple with $^3/_8$ to $^1/_2$-inch crown[y]	0.120 nail (shank) with a 0.313 head or 16-gage staple with $^3/_8$ to $^1/_2$-inch crown[y]	0.120 nail (shank) with a 0.313 head per Section R703.11.2	Not allowed	16 inches on center or specified by the manufacturer instructions or test report
Wood[j] rustic, drop	$^3/_8$ Min	Lap	Yes	Fastener penetration into stud-1″					0.113 nail-$2^1/_2$″ Staple-2″	Face nailing up to 6″ widths, 1 nail per bearing; 8″ widths and over, 2 nails per bearing

(continued)

TABLE R703.4—continued
WEATHER-RESISTANT SIDING ATTACHMENT AND MINIMUM THICKNESS

SIDING MATERIAL	NOMINAL THICKNESS[a] (inches)	JOINT TREATMENT	WATER-RESISTIVE BARRIER REQUIRED	TYPE OF SUPPORTS FOR THE SIDING MATERIAL AND FASTENERS[b, c, d]					
				Wood or wood structural panel sheathing into stud	Fiberboard sheathing into stud	Gypsum sheathing into stud	Foam plastic sheathing into stud	Direct to studs	Number or spacing of fasteners
Shiplap	$^{19}/_{32}$ Average	Lap	Yes	Fastener penetration into stud-1″				0.113 nail-2$^{1}/_{2}$″ Staple-2″	Face nailing up to 6″ widths, 1 nail per bearing; 8″ widths and over, 2 nails per bearing
Bevel	$^{7}/_{16}$								
Butt tip	$^{3}/_{16}$	Lap	Yes						
Fiber cement panel siding[q]	$^{5}/_{16}$	Note q	Yes Note u	6d common corrosion-resistant nail[r]	6d common corrosion-resistant nail[r]	6d common corrosion-resistant nail[r]	6d common corrosion-resistant nail[r, v]	4d common corrosion-resistant nail[r]	6″ o.c. on edges, 12″ o.c. on intermed. studs
Fiber cement lap siding[s]	$^{5}/_{16}$	Note s	Yes Note u	6d common corrosion-resistant nail[r]	6d common corrosion-resistant nail[r]	6d common corrosion-resistant nail[r]	6d common corrosion-resistant nail[r, v]	6d common corrosion-resistant nail or 11-gage roofing nail[r]	Note t

For SI: 1 inch = 25.4 mm.

a. Based on stud spacing of 16 inches on center where studs are spaced 24 inches, siding shall be applied to sheathing approved for that spacing.
b. Nail is a general description and shall be T-head, modified round head, or round head with smooth or deformed shanks.
c. Staples shall have a minimum crown width of $^{7}/_{16}$-inch outside diameter and be manufactured of minimum 16-gage wire.
d. Nails or staples shall be aluminum, galvanized, or rust-preventative coated and shall be driven into the studs where fiberboard, gypsum, or foam plastic sheathing backing is used. Where wood or wood structural panel sheathing is used, fasteners shall be driven into studs unless otherwise permitted to be driven into sheathing in accordance with the siding manufacturer's installation instructions.
e. Aluminum nails shall be used to attach aluminum siding.
f. Aluminum (0.019 inch) shall be unbacked only when the maximum panel width is 10 inches and the maximum flat area is 8 inches. The tolerance for aluminum siding shall be +0.002 inch of the nominal dimension.
g. All attachments shall be coated with a corrosion-resistant coating.
h. Shall be of approved type.
i. Three-eighths-inch plywood shall not be applied directly to studs spaced more than 16 inches on center when long dimension is parallel to studs. Plywood $^{1}/_{2}$-inch or thinner shall not be applied directly to studs spaced more than 24 inches on center. The stud spacing shall not exceed the panel span rating provided by the manufacturer unless the panels are installed with the face grain perpendicular to the studs or over sheathing approved for that stud spacing.
j. Wood board sidings applied vertically shall be nailed to horizontal nailing strips or blocking set 24 inches on center. Nails shall penetrate 1$^{1}/_{2}$ inches into studs, studs and wood sheathing combined or blocking.
k. Hardboard siding shall comply with CPA/ANSI A135.6.
l. Vinyl siding shall comply with ASTM D 3679.
m. Minimum shank diameter of 0.092 inch, minimum head diameter of 0.225 inch, and nail length must accommodate sheathing and penetrate framing 1$^{1}/_{2}$ inches.
n. When used to resist shear forces, the spacing must be 4 inches at panel edges and 8 inches on interior supports.
o. Minimum shank diameter of 0.099 inch, minimum head diameter of 0.240 inch, and nail length must accommodate sheathing and penetrate framing 1$^{1}/_{2}$ inches.
p. Vertical end joints shall occur at studs and shall be covered with a joint cover or shall be caulked.
q. See Section R703.10.1.
r. Fasteners shall comply with the nominal dimensions in ASTM F 1667.
s. See Section R703.10.2.
t. Face nailing: one 6d common nail through the over lap ping planks at each stud. Concealed nailing: one 11 gage 1$^{1}/_{2}$ inch long galv. roofing nail through the top edge of each plank at each stud.
u. See Section R703.2 exceptions.
v. Minimum nail length must accommodate sheathing and penetrate framing 1$^{1}/_{2}$ inches.
w. Adhered masonry veneer shall comply with the requirements of Section R703.6.3 and shall comply with the requirements in Sections 6.1 and 6.3 of TMS-402 ACI 530/ASCE 5.
x. Vertical joints, if staggered shall be permitted to be away from studs if applied over wood structural panel sheathing.
y. Minimum fastener length must accommodate sheathing and penetrate framing 0.75 inches or in accordance with the manufacturer's installation instructions.
z. Where approved by the manufacturer's instructions or test report siding shall be permitted to be installed with fasteners penetrating not less than 0.75 inches through wood or wood structural sheathing with or without penetration into the framing.

R703.5.3 Attachment. Each shake or shingle shall be held in place by two hot-dipped zinc-coated, stainless steel, or aluminum nails or staples. The fasteners shall be long enough to penetrate the sheathing or furring strips by a minimum of $^1/_2$ inch (13 mm) and shall not be overdriven.

R703.5.3.1 Staple attachment. Staples shall not be less than 16 gage and shall have a crown width of not less than $^7/_{16}$ inch (11 mm), and the crown of the staples shall be parallel with the butt of the shake or shingle. In single-course application, the fasteners shall be concealed by the course above and shall be driven approximately 1 inch (25 mm) above the butt line of the succeeding course and $^3/_4$ inch (19 mm) from the edge. In double-course applications, the exposed shake or shingle shall be face-nailed with two casing nails, driven approximately 2 inches (51 mm) above the butt line and $^3/_4$ inch (19 mm) from each edge. In all applications, staples shall be concealed by the course above. With shingles wider than 8 inches (203 mm) two additional nails shall be required and shall be nailed approximately 1 inch (25 mm) apart near the center of the shingle.

R703.5.4 Bottom courses. The bottom courses shall be doubled.

R703.6 Exterior plaster. Installation of these materials shall be in compliance with ASTM C 926 and ASTM C 1063 and the provisions of this code.

R703.6.1 Lath. All lath and lath attachments shall be of corrosion-resistant materials. Expanded metal or woven wire lath shall be attached with $1^1/_2$-inch-long (38 mm), 11 gage nails having a $^7/_{16}$-inch (11.1 mm) head, or $^7/_8$-inch-long (22.2 mm), 16 gage staples, spaced at no more than 6 inches (152 mm), or as otherwise approved.

R703.6.2 Plaster. Plastering with portland cement plaster shall be not less than three coats when applied over metal lath or wire lath and shall be not less than two coats when applied over masonry, concrete, pressure-preservative treated wood or decay-resistant wood as specified in Section R317.1 or gypsum backing. If the plaster surface is completely covered by veneer or other facing material or is completely concealed, plaster application need be only two coats, provided the total thickness is as set forth in Table R702.1(1).

On wood-frame construction with an on-grade floor slab system, exterior plaster shall be applied to cover, but not extend below, lath, paper and screed.

The proportion of aggregate to cementitious materials shall be as set forth in Table R702.1(3).

R703.6.2.1 Weep screeds. A minimum 0.019-inch (0.5 mm) (No. 26 galvanized sheet gage), corrosion-resistant weep screed or plastic weep screed, with a minimum vertical attachment flange of $3^1/_2$ inches (89 mm) shall be provided at or below the foundation plate line on exterior stud walls in accordance with ASTM C 926. The weep screed shall be placed a minimum of 4 inches (102 mm) above the earth or 2 inches (51 mm) above paved areas and shall be of a type that will allow trapped water to drain to the exterior of the building. The weather-resistant barrier shall lap the attachment flange. The exterior lath shall cover and terminate on the attachment flange of the weep screed.

R703.6.3 Water-resistive barriers. Water-resistive barriers shall be installed as required in Section R703.2 and, where applied over wood-based sheathing, shall include a water-resistive vapor-permeable barrier with a performance at least equivalent to two layers of Grade D paper. The individual layers shall be installed independently such that each layer provides a separate continuous plane and any flashing (installed in accordance with Section R703.8) intended to drain to the water-resistive barrier is directed between the layers.

Exception: Where the water-resistive barrier that is applied over wood-based sheathing has a water resistance equal to or greater than that of 60-minute Grade D paper and is separated from the stucco by an intervening, substantially nonwater-absorbing layer or designed drainage space.

R703.6.4 Application. Each coat shall be kept in a moist condition for at least 48 hours prior to application of the next coat.

Exception: Applications installed in accordance with ASTM C 926.

R703.6.5 Curing. The finish coat for two-coat cement plaster shall not be applied sooner than seven days after application of the first coat. For three-coat cement plaster, the second coat shall not be applied sooner than 48 hours after application of the first coat. The finish coat for three-coat cement plaster shall not be applied sooner than seven days after application of the second coat.

R703.7 Stone and masonry veneer, general. Stone and masonry veneer shall be installed in accordance with this chapter, Table R703.4 and Figure R703.7. These veneers installed over a backing of wood or cold-formed steel shall be limited to the first story above-grade plane and shall not exceed 5 inches (127 mm) in thickness. See Section R602.10 for wall bracing requirements for masonry veneer for wood-framed construction and Section R603.9.5 for wall bracing requirements for masonry veneer for cold-formed steel construction.

Exceptions:

1. For all buildings in Seismic Design Categories A, B and C, exterior stone or masonry veneer, as specified in Table R703.7(1), with a backing of wood or steel framing shall be permitted to the height specified in Table R703.7(1) above a noncombustible foundation.
2. For detached one- or two-family dwellings in Seismic Design Categories D_0, D_1 and D_2, exterior stone or masonry veneer, as specified in Table R703.7(2), with a backing of wood framing shall be permitted to the height specified in Table R703.7(2) above a noncombustible foundation.

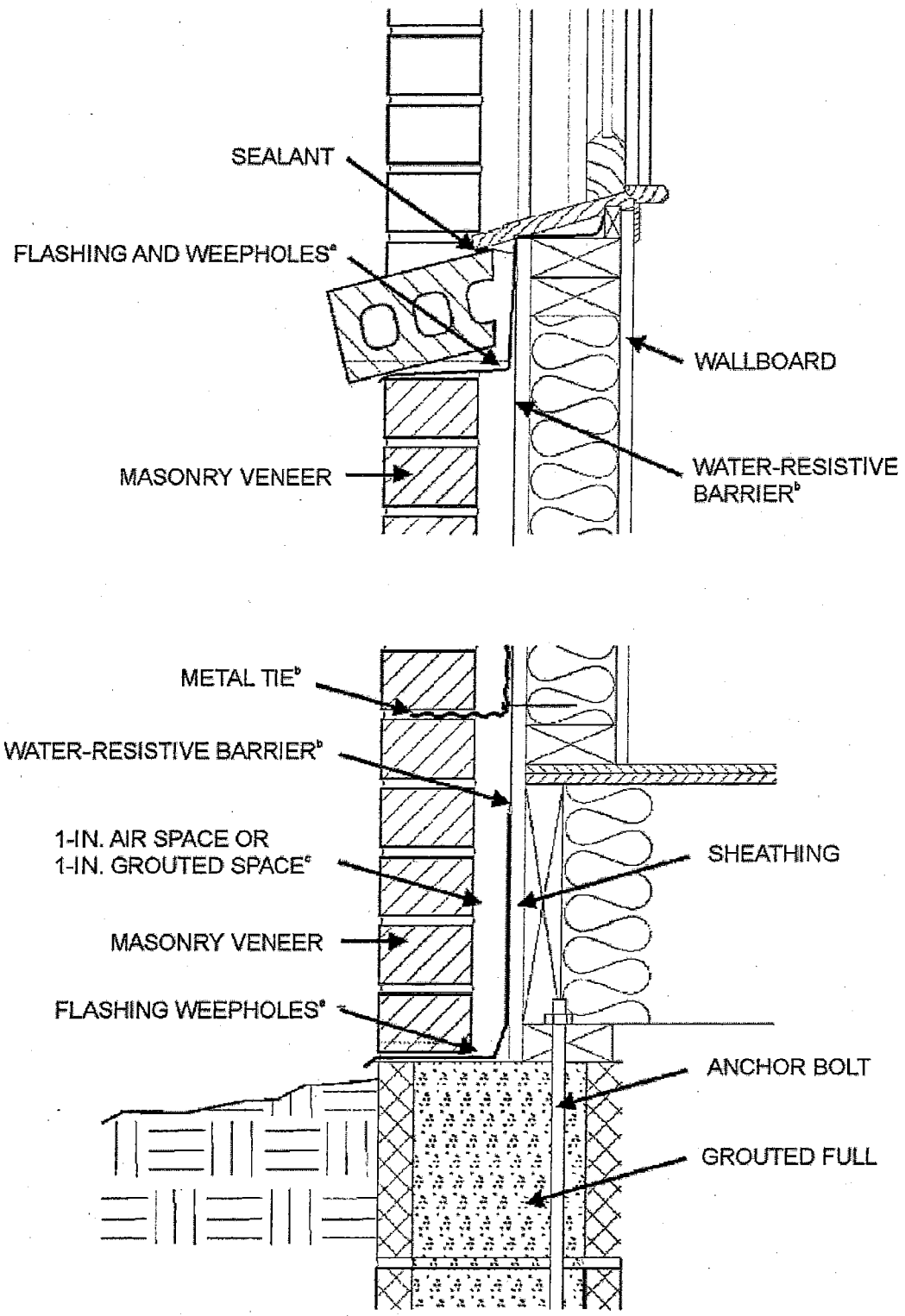

For SI: 1 inch = 24.5 mm.

FIGURE R703.7
MASONRY VENEER WALL DETAILS

(continued)

4094

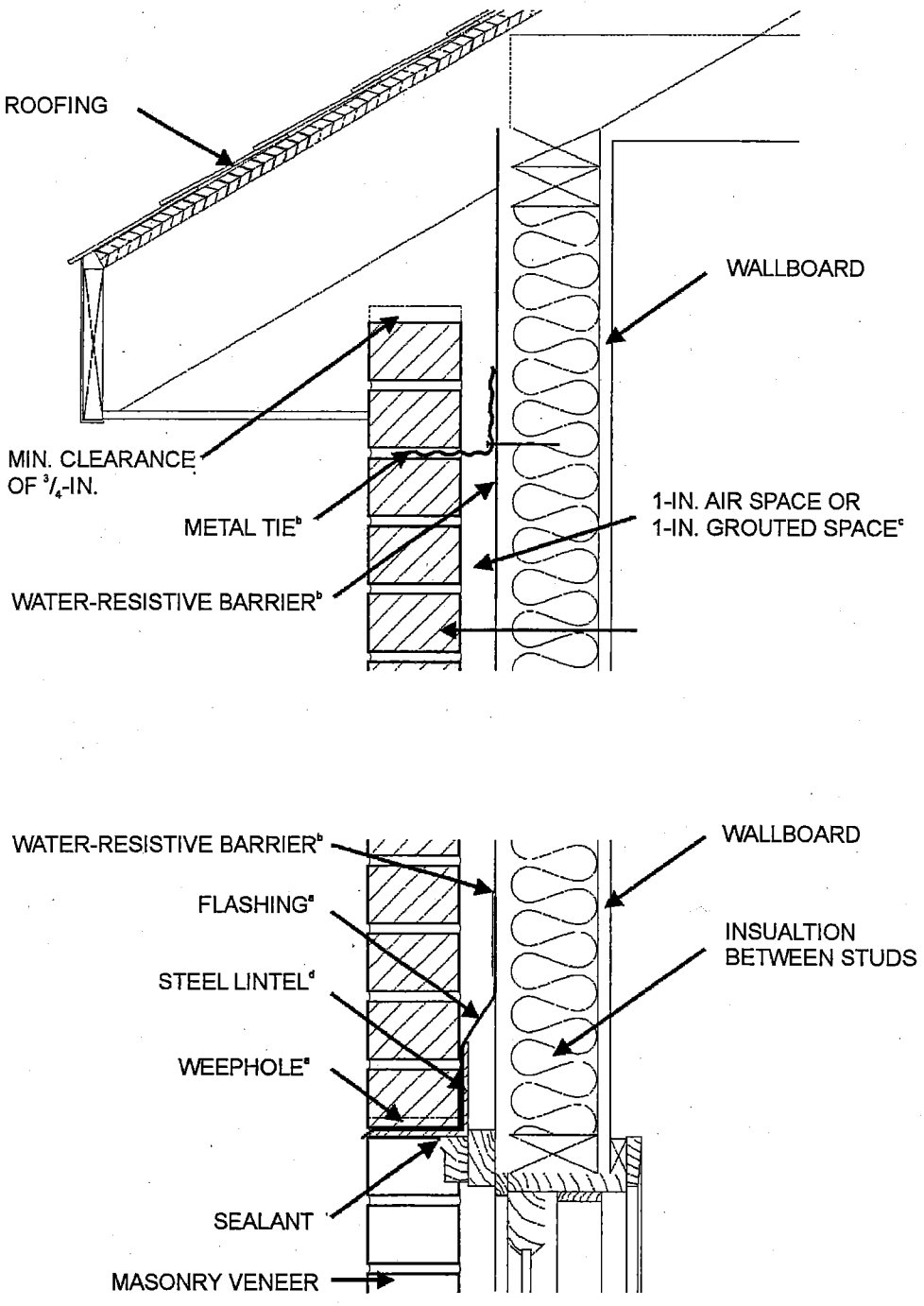

For SI: 1 inch = 25.4 mm.

a. See Sections R703.7.5, R703.7.6 and R703.8.

b. See Sections R703.2 and R703.7.4.

c. See Section R703.7.4.2 and Table R703.7.4.

d. See Section R703.7.3.

FIGURE R703.7—continued
MASONRY VENEER WALL DETAILS

4095

TABLE R703.7(1)
STONE OR MASONRY VENEER LIMITATIONS AND REQUIREMENTS, WOOD OR STEEL FRAMING, SEISMIC DESIGN CATEGORIES A, B AND C

SEISMIC DESIGN CATEGORY	NUMBER OF WOOD OR STEEL-FRAMED STORIES	MAXIMUM HEIGHT OF VENEER ABOVE NONCOMBUSTIBLE FOUNDATION[a] (feet)	MAXIMUM NOMINAL THICKNESS OF VENEER (inches)	MAXIMUM WEIGHT OF VENEER (psf)[b]	WOOD OR STEEL-FRAMED STORY
A or B	Steel: 1 or 2 Wood: 1, 2 or 3	30	5	50	all
C	1	30	5	50	1 only
	2	30	5	50	top
					bottom
	Wood only: 3	30	5	50	top
					middle
					bottom

For SI: 1 inch = 25.4 mm, 1 foot = 304.8 mm, 1 pound per square foot = 0.479 kPa.

a. An additional 8 feet is permitted for gable end walls. See also story height limitations of Section R301.3.

b. Maximum weight is installed weight and includes weight of mortar, grout, lath and other materials used for installation. Where veneer is placed on both faces of a wall, the combined weight shall not exceed that specified in this table.

TABLE R703.7(2)
STONE OR MASONRY VENEER LIMITATIONS AND REQUIREMENTS, ONE- AND TWO-FAMILY DETACHED DWELLINGS, WOOD FRAMING, SEISMIC DESIGN CATEGORIES D_0, D_1 AND D_2

SEISMIC DESIGN CATEGORY	NUMBER OF WOOD FRAMED STORIES[a]	MAXIMUM HEIGHT OF VENEER ABOVE NONCOMBUSTIBLE FOUNDATION OR FOUNDATION WALL (feet)	MAXIMUM NOMINAL THICKNESS OF VENEER (inches)	MAXIMUM WEIGHT OF VENEER (psf)[b]
D_0	1	20[c]	4	40
	2	20[c]	4	40
	3	30[d]	4	40
D_1	1	20[c]	4	40
	2	20[c]	4	40
	3	20[c]	4	40
D_2	1	20[c]	3	30
	2	20[c]	3	30

For SI: 1 inch = 25.4 mm, 1 foot = 304.8 mm, 1 pound per square foot = 0.479 kPa, 1 pound-force = 4.448 N.

a. Cripple walls are not permitted in Seismic Design Categories D_0, D_1 and D_2.

b. Maximum weight is installed weight and includes weight of mortar, grout and lath, and other materials used for installation.

c. The veneer shall not exceed 20 feet in height above a noncombustible foundation, with an additional 8 feet permitted for gable end walls, or 30 feet in height with an additional 8 feet for gable end walls where the lower 10 feet has a backing of concrete or masonry wall. See also story height limitations of Section R301.3.

d. The veneer shall not exceed 30 feet in height above a noncombustible foundation, with an additional 8 feet permitted for gable end walls. See also story height limitations of Section R301.3.

R703.7.1 Interior veneer support. Veneers used as interior wall finishes shall be permitted to be supported on wood or cold-formed steel floors that are designed to support the loads imposed.

R703.7.2 Exterior veneer support. Except in Seismic Design Categories D_0, D_1 and D_2, exterior masonry veneers having an installed weight of 40 pounds per square foot (195 kg/m^2) or less shall be permitted to be supported on wood or cold-formed steel construction. When masonry veneer supported by wood or cold-formed steel construction adjoins masonry veneer supported by the foundation, there shall be a movement joint between the veneer supported by the wood or cold-formed steel construction and the veneer supported by the foundation. The wood or cold-formed steel construction supporting the masonry veneer shall be designed to limit the deflection to $^1/_{600}$ of the span for the supporting members. The design of the wood or cold-formed steel construction shall consider the weight of the veneer and any other loads.

R703.7.2.1 Support by steel angle. A minimum 6 inches by 4 inches by $^5/_{16}$ inch (152 mm by 102 mm by 8 mm) steel angle, with the long leg placed vertically, shall be anchored to double 2 inches by 4 inches (51 mm by 102 mm) wood studs at a maximum on-center spacing of 16 inches (406 mm). Anchorage of the steel angle at every double stud spacing shall be a minimum

of two $^{7}/_{16}$ inch (11 mm) diameter by 4 inch (102 mm) lag screws. The steel angle shall have a minimum clearance to underlying construction of $^{1}/_{16}$ inch (2 mm). A minimum of two-thirds the width of the masonry veneer thickness shall bear on the steel angle. Flashing and weep holes shall be located in the masonry veneer wythe in accordance with Figure R703.7.2.1. The maximum height of masonry veneer above the steel angle support shall be 12 feet, 8 inches (3861 mm). The air space separating the masonry veneer from the wood backing shall be in accordance with Sections R703.7.4 and R703.7.4.2. The method of support for the masonry veneer on wood construction shall be constructed in accordance with Figure R703.7.2.1.

The maximum slope of the roof construction without stops shall be 7:12. Roof construction with slopes greater than 7:12 but not more than 12:12 shall have stops of a minimum 3 inch by 3 inch by $^{1}/_{4}$ inch (76 mm by 76 mm by 6 mm) steel plate welded to the angle at 24 inches (610 mm) on center along the angle or as approved by the building official.

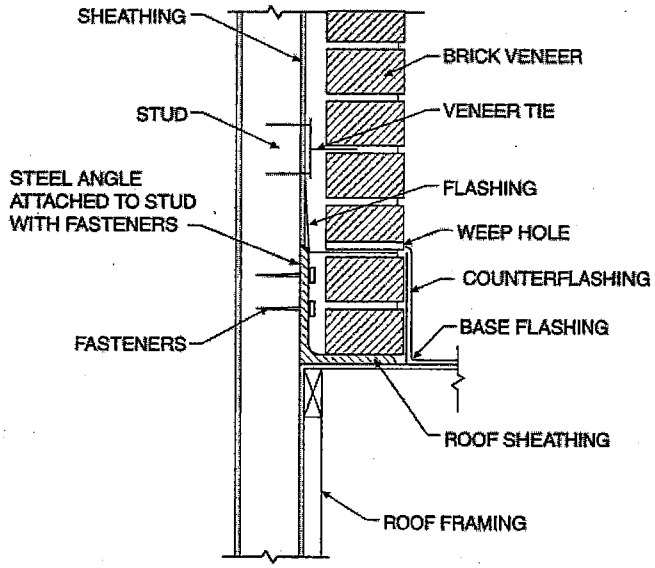

FIGURE R703.7.2.1
EXTERIOR MASONRY VENEER SUPPORT BY STEEL ANGLES

R703.7.2.2 Support by roof construction. A steel angle shall be placed directly on top of the roof construction. The roof supporting construction for the steel angle shall consist of a minimum of three 2 inch by 6 inch (51 mm by 152 mm) wood members. The wood member abutting the vertical wall stud construction shall be anchored with a minimum of three $^{5}/_{8}$-inch (16 mm) diameter by 5-inch (127 mm) lag screws to every wood stud spacing. Each additional roof member shall be anchored by the use of two 10d nails at every wood stud spacing. A minimum of two-thirds the width of the masonry veneer thickness shall bear on the steel angle. Flashing and weep holes shall be located in the masonry veneer wythe in accordance with Figure R703.7.2.2. The maximum height of the masonry veneer above the steel angle support shall be 12 feet, 8 inches (3861 mm). The air space separating the masonry veneer from the wood backing shall be in accordance with Sections R703.7.4 and R703.7.4.2. The support for the masonry veneer on wood construction shall be constructed in accordance with Figure R703.7.2.2.

The maximum slope of the roof construction without stops shall be 7:12. Roof construction with slopes greater than 7:12 but not more than 12:12 shall have stops of a minimum 3 inch by 3 inch by $^{1}/_{4}$ inch (76 mm by 76 mm by 6 mm) steel plate welded to the angle at 24 inches (610 mm) on center along the angle or as approved by the building official.

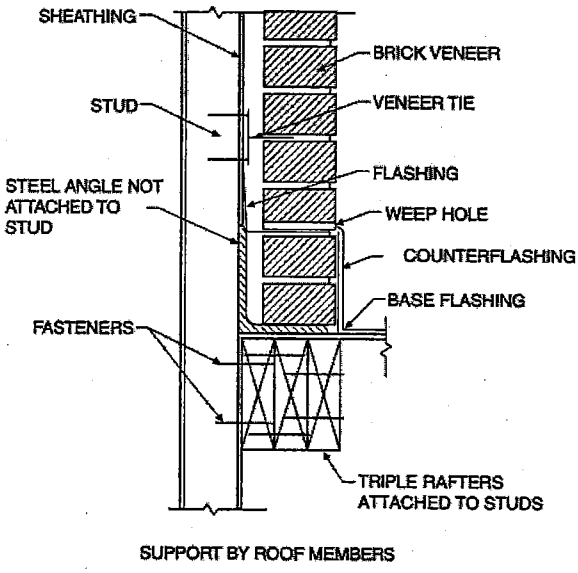

FIGURE R703.7.2.2
EXTERIOR MASONRY VENEER SUPPORT BY ROOF MEMBERS

R703.7.3 Lintels. Masonry veneer shall not support any vertical load other than the dead load of the veneer above. Veneer above openings shall be supported on lintels of noncombustible materials. The lintels shall have a length of bearing not less than 4 inches (102 mm). Steel lintels shall be shop coated with a rust-inhibitive paint, except for lintels made of corrosion-resistant steel or steel treated with coatings to provide corrosion resistance. Construction of openings shall comply with either Section R703.7.3.1 or 703.7.3.2.

R703.7.3.1 Allowable span. The allowable span shall not exceed the values set forth in Table R703.7.3.1.

R703.7.3.2 Maximum span. The allowable span shall not exceed 18 feet 3 inches (5562 mm) and shall be constructed to comply with Figure R703.7.3.2 and the following:

1. Provide a minimum length of 18 inches (457 mm) of masonry veneer on each side of opening as shown in Figure R703.7.3.2.

2. Provide a minimum 5-inch by $3^1/_2$-inch by $^5/_{16}$-inch (127 mm by 89 mm by 7.9 mm) steel angle above the opening and shore for a minimum of 7 days after installation.
3. Provide double-wire joint reinforcement extending 12 inches (305 mm) beyond each side of the opening. Lap splices of joint reinforcement a minimum of 12 inches (305 mm). Comply with one of the following:
   3.1. Double-wire joint reinforcement shall be $^3/_{16}$-inch (4.8 mm) diameter and shall be placed in the first two bed joints above the opening.
   3.2. Double-wire joint reinforcement shall be 9 gauge (0.144 inch or 3.66 mm diameter) and shall be placed in the first three bed joints above the opening.
4. Provide the height of masonry veneer above opening, in accordance with Table R703.7.3.2.

TABLE R703.7.3.2
HEIGHT OF MASONRY VENEER ABOVE OPENING

MINIMUM HEIGHT OF MASONRY VENEER ABOVE OPENING (INCH)	MAXIMUM HEIGHT OF MASONRY VENEER ABOVE OPENING (FEET)
13	< 5
24	5 to < 12
60	12 to height above support allowed by Section R703.7

For SI:1 inch = 25.4 mm, 1 foot = 304.8 mm.

R703.7.4 Anchorage. Masonry veneer shall be anchored to the supporting wall studs with corrosion-resistant metal ties embedded in mortar or grout and extending into the veneer a minimum of $1^1/_2$ inches (38 mm), with not less than $^5/_8$-inch (15.9 mm) mortar or grout cover to outside face. Masonry veneer shall conform to Table R703.7.4.

R703.7.4.1 Size and spacing. Veneer ties, if strand wire, shall not be less in thickness than No. 9 U.S. gage [(0.148 inch) (4 mm)] wire and shall have a hook embedded in the mortar joint, or if sheet metal, shall be not less than No. 22 U.S. gage by [(0.0299 inch) (0.76 mm)] $^7/_8$ inch (22 mm) corrugated. Each tie shall support not more than 2.67 square feet (0.25 m^2) of wall area and shall be spaced not more than 32 inches (813 mm) on center horizontally and 24 inches (635 mm) on center vertically.

Exception: In Seismic Design Category D_0, D_1 or D_2 or townhouses in Seismic Design Category C or in wind areas of more than 30 pounds per square foot pressure (1.44 kPa), each tie shall support not more than 2 square feet (0.2 m^2) of wall area.

R703.7.4.1.1 Veneer ties around wall openings. Additional metal ties shall be provided around all wall openings greater than 16 inches (406 mm) in either dimension. Metal ties around the perimeter of openings shall be spaced not more than 3 feet (9144 mm) on center and placed within 12 inches (305 mm) of the wall opening.

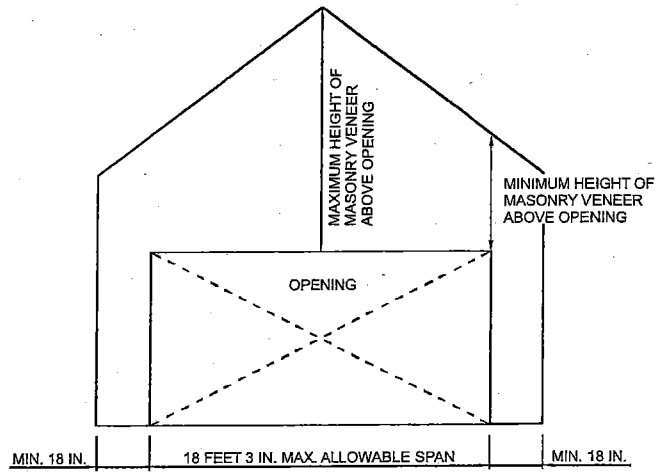

For SI: 1 inch = 25.4 mm, 1 foot = 304.8 mm.

FIGURE R703.7.3.2
MASONRY VENEER OPENING

TABLE R703.7.3.1
ALLOWABLE SPANS FOR LINTELS SUPPORTING MASONRY VENEER[a, b, c, d]

SIZE OF STEEL ANGLE[a, c, d] (inches)	NO STORY ABOVE	ONE STORY ABOVE	TWO STORIES ABOVE	NO. OF $^1/_2$-INCH OR EQUIVALENT REINFORCING BARS IN REINFORCED LINTEL[b, d]
$3 \times 3 \times ^1/_4$	6′-0″	4′-6″	3′-0″	1
$4 \times 3 \times ^1/_4$	8′-0″	6′-0″	4′-6″	1
$5 \times 3^1/_2 \times ^5/_{16}$	10′-0″	8′-0″	6′-0″	2
$6 \times 3^1/_2 \times ^5/_{16}$	14′-0″	9′-6″	7′-0″	2
$2\text{-}6 \times 3^1/_2 \times ^5/_{16}$	20′-0″	12′-0″	9′-6″	4

For SI: 1 inch = 25.4 mm, 1 foot = 304.8 mm.

a. Long leg of the angle shall be placed in a vertical position.
b. Depth of reinforced lintels shall not be less than 8 inches and all cells of hollow masonry lintels shall be grouted solid. Reinforcing bars shall extend not less than 8 inches into the support.
c. Steel members indicated are adequate typical examples; other steel members meeting structural design requirements may be used.
d. Either steel angle or reinforced lintel shall span opening.

TABLE R703.7.4
TIE ATTACHMENT AND AIR SPACE REQUIREMENTS

BACKING AND TIE	MINIMUM TIE	MINIMUM TIE FASTENER[a]	AIR SPACE	
Wood stud backing with corrugated sheet metal	22 U.S. gage (0.0299 in.) × $^7/_8$ in. wide	8d common nail [b] ($2^1/_2$ in. × 0.131 in.)	Nominal 1 in. between sheathing and veneer	
Wood stud backing with metal strand wire	W1.7 (No. 9 U.S. gage; 0.148 in.) with hook embedded in mortar joint	8d common nail [b] ($2^1/_2$ in. × 0.131 in.)	Minimum nominal 1 in. between sheathing and veneer	Maximum $4^1/_2$ in. between backing and veneer
Cold-formed steel stud backing with adjustable metal strand wire	W1.7 (No. 9 U.S. gage; 0.148 in.) with hook embedded in mortar joint	No. 10 screw extending through the steel framing a minimum of three exposed threads	Minimum nominal 1 in. between sheathing and veneer	Maximum $4^1/_2$ in. between backing and veneer

For SI: 1 inch = 25.4 mm.

a. In Seismic Design Category D_0, D_1 or D_2, the minimum tie fastener shall be an 8d ring-shank nail ($2^1/_2$ in. × 0.131 in.) or a No. 10 screw extending through the steel framing a minimum of three exposed threads.

b. All fasteners shall have rust-inhibitive coating suitable for the installation in which they are being used, or be manufactured from material not susceptible to corrosion.

R703.7.4.2 Grout fill. As an alternative to the air space required by Table R703.7.4, grout shall be permitted to fill the air space. When the air space is filled with grout, a water-resistive barrier is required over studs or sheathing. When filling the air space, replacing the sheathing and water-resistive barrier with a wire mesh and approved water-resistive barrier or an approved water-resistive barrier-backed reinforcement attached directly to the studs is permitted.

R703.7.5 Flashing. Flashing shall be located beneath the first course of masonry above finished ground level above the foundation wall or slab and at other points of support, including structural floors, shelf angles and lintels when masonry veneers are designed in accordance with Section R703.7. See Section R703.8 for additional requirements.

R703.7.6 Weepholes. Weepholes shall be provided in the outside wythe of masonry walls at a maximum spacing of 33 inches (838 mm) on center. Weepholes shall not be less than $^3/_{16}$ inch (5 mm) in diameter. Weepholes shall be located immediately above the flashing.

R703.8 Flashing. Approved corrosion-resistant flashing shall be applied shingle-fashion in a manner to prevent entry of water into the wall cavity or penetration of water to the building structural framing components. Self-adhered membranes used as flashing shall comply with AAMA 711. The flashing shall extend to the surface of the exterior wall finish. Approved corrosion-resistant flashings shall be installed at all of the following locations:

1. Exterior window and door openings. Flashing at exterior window and door openings shall extend to the surface of the exterior wall finish or to the water-resistive barrier for subsequent drainage. Flashing at exterior window and door openings shall be installed in accordance with one or more of the following:
   1.1. The fenestration manufacturer's installation and flashing instructions, or for applications not addressed in the fenestration manufacturer's instructions, in accordance with the flashing manufacturer's instructions. Where flashing instructions or details are not provided, pan flashing shall be installed at the sill of exterior window and door openings. Pan flashing shall be sealed or sloped in such a manner as to direct water to the surface of the exterior wall finish or to the water-resistive barrier for subsequent drainage. Openings using pan flashing shall also incorporate flashing or protection at the head and sides.
   1.2. In accordance with the flashing design or method of a registered design professional.
   1.3. In accordance with other approved methods.
2. At the intersection of chimneys or other masonry construction with frame or stucco walls, with projecting lips on both sides under stucco copings.
3. Under and at the ends of masonry, wood or metal copings and sills.
4. Continuously above all projecting wood trim.
5. Where exterior porches, decks or stairs attach to a wall or floor assembly of wood-frame construction.
6. At wall and roof intersections.
7. At built-in gutters.

R703.9 Exterior insulation and finish system (EIFS)/EIFS with drainage. Exterior Insulation and Finish System (EIFS) shall comply with this chapter and Sections R703.9.1 and R703.9.3. EIFS with drainage shall comply with this chapter and Sections R703.9.2, R703.9.3 and R703.9.4.

R703.9.1 Exterior insulation and finish system (EIFS). EIFS shall comply with ASTM E 2568.

R703.9.2 Exterior insulation and finish system (EIFS) with drainage. EIFS with drainage shall comply with ASTM E 2568 and shall have an average minimum drainage efficiency of 90 percent when tested in accordance with ASTM E 2273.

R703.9.2.1 Water-resistive barrier. The water-resistive barrier shall comply with Section R703.2 or ASTM E 2570.

R703.9.2.2 Installation. The water-resistive barrier shall be applied between the EIFS and the wall sheathing.

R703.9.3 Flashing, general. Flashing of EIFS shall be provided in accordance with the requirements of Section R703.8.

R703.9.4 EIFS/EIFS with drainage installation. All EIFS shall be installed in accordance with the manufacturer's installation instructions and the requirements of this section.

R703.9.4.1 Terminations. The EIFS shall terminate not less than 6 inches (152 mm) above the finished ground level.

R703.9.4.2 Decorative trim. Decorative trim shall not be face nailed though the EIFS.

R703.10 Fiber cement siding.

R703.10.1 Panel siding. Fiber-cement panels shall comply with the requirements of ASTM C 1186, Type A, minimum Grade II. Panels shall be installed with the long dimension either parallel or perpendicular to framing. Vertical and horizontal joints shall occur over framing members and shall be sealed with caulking, covered with battens or shall be designed to comply with Section R703.1. Panel siding shall be installed with fasteners according to Table R703.4 or approved manufacturer's installation instructions.

R703.10.2 Lap siding. Fiber-cement lap siding having a maximum width of 12 inches shall comply with the requirements of ASTM C 1186, Type A, minimum Grade II. Lap siding shall be lapped a minimum of $1^1/_4$ inches (32 mm) and lap siding not having tongue-and-groove end joints shall have the ends sealed with caulking, installed with an H-section joint cover, located over a strip of flashing or shall be designed to comply with Section R703.1. Lap siding courses may be installed with the fastener heads exposed or concealed, according to Table R703.4 or approved manufacturers' installation instructions.

R703.11 Vinyl siding. Vinyl siding shall be certified and labeled as conforming to the requirements of ASTM D 3679 by an approved quality control agency.

R703.11.1 Installation. Vinyl siding, soffit and accessories shall be installed in accordance with the manufacturer's installation instructions.

R703.11.1.1 Vinyl soffit panels. Soffit panels shall be individually fastened to a supporting component such as a nailing strip, fascia or subfascia component or as specified by the manufacturer's instructions.

R703.11.2 Foam plastic sheathing. Vinyl siding used with foam plastic sheathing shall be installed in accordance with Section R703.11.2.1, R703.11.2.2, or R703.11.2.3.

Exception: Where the foam plastic sheathing is applied directly over wood structural panels, fiberboard, gypsum sheathing or other approved backing capable of independently resisting the design wind pressure, the vinyl siding shall be installed in accordance with Section R703.11.1.

R703.11.2.1 Basic wind speed not exceeding 90 miles per hour and Exposure Category B. Where the basic wind speed does not exceed 90 miles per hour (40 m/s), the Exposure Category is B and gypsum wall board or equivalent is installed on the side of the wall opposite the foam plastic sheathing, the minimum siding fastener penetration into wood framing shall be $1^1/_4$ inches (32 mm) using minimum 0.120-inch diameter nail (shank) with a minimum 0.313-inch diameter head, 16 inches on center. The foam plastic sheathing shall be minimum $^1/_2$-inch-thick (12.7 mm) (nominal) extruded polystyrene per ASTM C 578, $^1/_2$-inch-thick (12.7 mm) (nominal) polyisocyanurate per ASTM C 1289, or 1-inch-thick (25 mm) (nominal) expanded polystyrene per ASTM C 578.

R703.11.2.2 Basic wind speed exceeding 90 miles per hour or Exposure Categories C and D. Where the basic wind speed exceeds 90 miles per hour (40 m/s) or the Exposure Category is C or D, or all conditions of Section R703.11.2.1 are not met, the adjusted design pressure rating for the assembly shall meet or exceed the loads listed in Tables R301.2(2) adjusted for height and exposure using Table R301.2(3). The design wind pressure rating of the vinyl siding for installation over solid sheathing as provided in the vinyl siding manufacturer's product specifications shall be adjusted for the following wall assembly conditions:

1. For wall assemblies with foam plastic sheathing on the exterior side and gypsum wall board or equivalent on the interior side of the wall, the vinyl siding's design wind pressure rating shall be multiplied by 0.39.
2. For wall assemblies with foam plastic sheathing on the exterior side and no gypsum wall board or equivalent on the interior side of wall, the vinyl siding's design wind pressure rating shall be multiplied by 0.27.

R703.11.2.3 Manufacturer specification. Where the vinyl siding manufacturer's product specifications provide an approved design wind pressure rating for installation over foam plastic sheathing, use of this design wind pressure rating shall be permitted and the siding shall be installed in accordance with the manufacturer's installation instructions.

R703.12 Adhered masonry veneer installation. Adhered masonry veneer shall be installed in accordance with the manufacturer's instructions.

R703.12.1 Clearances. On exterior stud walls, adhered masonry veneer shall be installed:

1. Minimum of 4 inches (102 mm) above the earth;
2. Minimum of 2 inches (51 mm) above paved areas; or
3. Minimum of $^1/_2$ inch (12 mm) above exterior walking surfaces which are supported by the same foundation that supports the exterior wall.

R703.12.2 Flashing at foundation. A corrosion-resistant screed or flashing of a minimum 0.019-inch (0.48 mm) or 26-gage galvanized or plastic with a minimum vertical attachment flange of $3^1/_2$ inches (89 mm) shall be installed

to extend a minimum of 1 inch (25 mm) below the foundation plate line on exterior stud walls in accordance with Section R703.8. The water-resistive barrier, as required by Table R703.4, Footnote w, shall lap over the exterior of the attachment flange of the screed or flashing.

CALIFORNIA RESIDENTIAL CODE – MATRIX ADOPTION TABLE
CHAPTER 8 – ROOF-CEILING CONSTRUCTION

(Matrix Adoption Tables are non-regulatory, intended only as an aid to the user.
See Chapter 1 for state agency authority and building applications.)

Adopting agency	BSC	SFM	HCD			DSA		OSHPD				BSCC	DHS	AGR	DWR	CEC	CA	SL	SLC
			1	2	1/AC	AC	SS	1	2	3	4								
Adopt entire chapter																			
Adopt entire chapter as amended (amended sections listed below)			X																
Adopt only those sections that are listed below		X																	
[California Code of Regulations, Title 19, Division 1]																			
Chapter / Section																			
R802.1			X																
R802.10.2			X																
R806.2			X																
R802.1.3 through R802.1.3.8		X																	
R802.10.2			X	X															
R806.5			X																
R807.1			X																

* The California Code of Regulations (CCR), Title 19, Division 1 provisions that are found in the *California Fire Code* are a reprint from the current CCR, Title 19, Division 1 text for the code user's convenience only. The scope, applicability and appeals procedures of CCR, Title 19, Division I remain the same.

CHAPTER 8

ROOF-CEILING CONSTRUCTION

SECTION R801
GENERAL

R801.1 Application. The provisions of this chapter shall control the design and construction of the roof-ceiling system for all buildings.

R801.2 Requirements. Roof and ceiling construction shall be capable of accommodating all loads imposed according to Section R301 and of transmitting the resulting loads to the supporting structural elements.

R801.3 Roof drainage. In areas where expansive or collapsible soils are known to exist, all dwellings shall have a controlled method of water disposal from roofs that will collect and discharge roof drainage to the ground surface at least 5 feet (1524 mm) from foundation walls or to an *approved* drainage system.

SECTION R802
WOOD ROOF FRAMING

R802.1 Identification. Load-bearing dimension lumber for rafters, trusses and ceiling joists shall be identified by a grade mark of a lumber grading or inspection agency that has been approved by an accreditation body that complies with DOC PS 20. In lieu of a grade mark, a certificate of inspection issued by a lumber grading or inspection agency meeting the requirements of this section shall be accepted.

Note: See Section R301.1.1.1 for limited-density owner-built rural dwellings.

R802.1.1 Blocking. Blocking shall be a minimum of utility grade lumber.

R802.1.2 End-jointed lumber. Approved end-jointed lumber identified by a grade mark conforming to Section R802.1 may be used interchangeably with solid-sawn members of the same species and grade. End-jointed lumber used in an assembly required elsewhere in this code to have a fire-resistance rating shall have the designation "Heat-Resistant Adhesive" or "HRA" included in its grade mark.

R802.1.3 Fire-retardant-treated wood. Fire-retardant-treated wood (FRTW) is any wood product which, when impregnated with chemicals by a pressure process or other means during manufacture, shall have, when tested in accordance with ASTM E 84 or UL 723, a listed flame spread index of 25 or less and shows no evidence of significant progressive combustion when the test is continued for an additional 20-minute period. In addition, the flame front shall not progress more than 10.5 feet (3200 mm) beyond the center line of the burners at any time during the test.

R802.1.3.1 Pressure process. For wood products impregnated with chemicals by a pressure process, the process shall be performed in closed vessels under pressures not less than 50 pounds per square inch gauge (psig) (344.7 kPa).

R802.1.3.2 Other means during manufacture. For wood products produced by other means during manu-

facture the treatment shall be an integral part of the manufacturing process of the wood product. The treatment shall provide permanent protection to all surfaces of the wood product.

R802.1.3.3 Testing. For wood products produced by other means during manufacture, other than a pressure process, all sides of the wood product shall be tested in accordance with and produce the results required in Section R802.1.3. Testing of only the front and back faces of wood structural panels shall be permitted.

R802.1.3.4 Labeling. Fire-retardant-treated lumber and wood structural panels shall be labeled. The label shall contain:

1. The identification mark of an approved agency in accordance with Section 1703.5 of the *California Building Code.*
2. Identification of the treating manufacturer.
3. The name of the fire-retardant treatment.
4. The species of wood treated.
5. Flame spread index and smoke-developed index.
6. Method of drying after treatment.
7. Conformance to applicable standards in accordance with Sections R802.1.3.5 through R802.1.3.8.
8. For FRTW exposed to weather, or a damp or wet location, the words "No increase in the listed classification when subjected to the Standard Rain Test" (ASTM D 2898).

R802.1.3.5 Strength adjustments. Design values for untreated lumber and wood structural panels as specified in Section R802.1 shall be adjusted for fire-retardant-treated wood. Adjustments to design values shall be based upon an approved method of investigation which takes into consideration the effects of the anticipated temperature and humidity to which the fire-retardant-treated wood will be subjected, the type of treatment and redrying procedures.

R802.1.3.5.1 Wood structural panels. The effect of treatment and the method of redrying after treatment, and exposure to high temperatures and high humidities on the flexure properties of fire-retardant-treated softwood plywood shall be determined in accordance with ASTM D 5516. The test data developed by ASTM D 5516 shall be used to develop adjustment factors, maximum loads and spans, or both for untreated plywood design values in accordance with ASTM D 6305. Each manufacturer shall publish the allowable maximum loads and spans for service as floor and roof sheathing for their treatment.

R802.1.3.5.2 Lumber. For each species of wood treated, the effect of the treatment and the method of redrying after treatment and exposure to high temperatures and high humidities on the allowable design properties of fire-retardant-treated lumber shall be determined in accordance with ASTM D 5664. The test data developed by ASTM D 5664 shall be used to develop modification factors for use at or near room temperature and at elevated temperatures and humidity in accordance with ASTM D 6841. Each manufacturer shall publish the modification factors for service at temperatures of not less than 80°F (27°C) and for roof framing. The roof framing modification factors shall take into consideration the climatological location.

R802.1.3.6 Exposure to weather. Where fire-retardant-treated wood is exposed to weather or damp or wet locations, it shall be identified as "Exterior" to indicate there is no increase in the listed flame spread index as defined in Section R802.1.3 when subjected to ASTM D 2898.

R802.1.3.7 Interior applications. Interior fire-retardant-treated wood shall have a moisture content of not over 28 percent when tested in accordance with ASTM D 3201 procedures at 92 percent relative humidity. Interior fire-retardant-treated wood shall be tested in accordance with Section R802.1.3.5.1 or R802.1.3.5.2. Interior fire-retardant-treated wood designated as Type A shall be tested in accordance with the provisions of this section.

R802.1.3.8 Moisture content. Fire-retardant-treated wood shall be dried to a moisture content of 19 percent or less for lumber and 15 percent or less for wood structural panels before use. For wood kiln dried after treatment (KDAT) the kiln temperatures shall not exceed those used in kiln drying the lumber and plywood submitted for the tests described in Section R802.1.3.5.1 for plywood and R802.1.3.5.2 for lumber.

R802.1.4 Structural glued laminated timbers. Glued laminated timbers shall be manufactured and identified as required in ANSI/AITC A190.1 and ASTM D 3737.

R802.1.5 Structural log members. Stress grading of structural log members of nonrectangular shape, as typically used in log buildings, shall be in accordance with ASTM D 3957. Such structural log members shall be identified by the grade mark of an approved lumber grading or inspection agency. In lieu of a grade mark on the material, a certificate of inspection as to species and grade issued by a lumber-grading or inspection agency meeting the requirements of this section shall be permitted to be accepted.

R802.1.6 Structural composite lumber. Structural capacities for structural composite lumber shall be established and monitored in accordance with ASTM D 5456.

R802.2 Design and construction. The framing details required in Section R802 apply to roofs having a minimum slope of three units vertical in 12 units horizontal (25-percent slope) or greater. Roof-ceilings shall be designed and constructed in accordance with the provisions of this chapter and Figures R606.11(1), R606.11(2) and R606.11(3) or in accordance with AFPA/NDS. Components of roof-ceilings shall be fastened in accordance with Table R602.3(1).

R802.3 Framing details. Rafters shall be framed to ridge board or to each other with a gusset plate as a tie. Ridge board shall be at least 1-inch (25 mm) nominal thickness and not less in depth than the cut end of the rafter. At all valleys and hips there shall be a valley or hip rafter not less than 2-inch (51 mm) nominal thickness and not less in depth than the cut end of the rafter. Hip and valley rafters shall be supported at the ridge by a brace to a bearing partition or be designed to carry and distribute the specific load at that point. Where the roof pitch is less than three units vertical in 12 units horizontal (25-percent slope), structural members that support rafters and ceiling joists, such as ridge beams, hips and valleys, shall be designed as beams.

R802.3.1 Ceiling joist and rafter connections. Ceiling joists and rafters shall be nailed to each other in accordance with Table R802.5.1(9), and the rafter shall be nailed to the top wall plate in accordance with Table R602.3(1). Ceiling joists shall be continuous or securely joined in accordance with Table R802.5.1(9) where they meet over interior partitions and are nailed to adjacent rafters to provide a continuous tie across the building when such joists are parallel to the rafters.

Where ceiling joists are not connected to the rafters at the top wall plate, joists connected higher in the attic shall be installed as rafter ties, or rafter ties shall be installed to provide a continuous tie. Where ceiling joists are not parallel to rafters, rafter ties shall be installed. Rafter ties shall be a minimum of 2 inches by 4 inches (51 mm by 102 mm) (nominal), installed in accordance with the connection requirements in Table R802.5.1(9), or connections of equivalent capacities shall be provided. Where ceiling joists or rafter ties are not provided, the ridge formed by these rafters shall be supported by a wall or girder designed in accordance with accepted engineering practice.

Collar ties or ridge straps to resist wind uplift shall be connected in the upper third of the attic space in accordance with Table R602.3(1).

Collar ties shall be a minimum of 1 inch by 4 inches (25 mm by 102 mm) (nominal), spaced not more than 4 feet (1219 mm) on center.

R802.3.2 Ceiling joists lapped. Ends of ceiling joists shall be lapped a minimum of 3 inches (76 mm) or butted over bearing partitions or beams and toenailed to the bearing member. Where ceiling joists are used to provide resistance to rafter thrust, lapped joists shall be nailed together in accordance with Table R802.5.1(9) and butted joists shall be tied together in a manner to resist such thrust. Joists that do not resist thrust shall be permitted to be nailed in accordance with Table R602.3(1).

R802.4 Allowable ceiling joist spans. Spans for ceiling joists shall be in accordance with Tables R802.4(1) and R802.4(2). For other grades and species and for other loading conditions, refer to the AF&PA *Span Tables for Joists and Rafters.*

R802.5 Allowable rafter spans. Spans for rafters shall be in accordance with Tables R802.5.1(1) through R802.5.1(8). For other grades and species and for other loading conditions, refer to the AF&PA *Span Tables for Joists and Rafters.* The span of each rafter shall be measured along the horizontal projection of the rafter.

R802.5.1 Purlins. Installation of purlins to reduce the span of rafters is permitted as shown in Figure R802.5.1. Purlins shall be sized no less than the required size of the rafters that they support. Purlins shall be continuous and shall be supported by 2-inch by 4-inch (51 mm by 102 mm) braces installed to bearing walls at a slope not less than 45 degrees (0.785 rad) from the horizontal. The braces shall be spaced not more than 4 feet (1219 mm) on center and the unbraced length of braces shall not exceed 8 feet (2438 mm).

R802.6 Bearing. The ends of each rafter or ceiling joist shall have not less than $1^1/_2$ inches (38 mm) of bearing on wood or metal and not less than 3 inches (76 mm) on masonry or concrete. The bearing on masonry or concrete shall be direct, or a sill plate of 2-inch (51 mm) minimum nominal thickness shall be provided under the rafter or ceiling joist. The sill plate shall provide a minimum nominal bearing area of 48 square inches (30 865 mm^2).

R802.6.1 Finished ceiling material. If the finished ceiling material is installed on the ceiling prior to the attachment of the ceiling to the walls, such as in construction at a factory, a compression strip of the same thickness as the finish ceiling material shall be installed directly above the top plate of bearing walls if the compressive strength of the finish ceiling material is less than the loads it will be required to withstand. The compression strip shall cover the entire length of such top plate and shall be at least one-

TABLE R802.4(1)
CEILING JOIST SPANS FOR COMMON LUMBER SPECIES
(Uninhabitable attics without storage, live load = 10 psf, L/Δ = 240)

CEILING JOIST SPACING (inches)	SPECIES AND GRADE		DEAD LOAD = 5 psf			
			2 × 4	2 × 6	2 × 8	2 × 10
			Maximum ceiling joist spans			
			(feet - inches)	(feet - inches)	(feet - inches)	(feet - inches)
12	Douglas fir-larch	SS	13-2	20-8	Note a	Note a
	Douglas fir-larch	#1	12-8	19-11	Note a	Note a
	Douglas fir-larch	#2	12-5	19-6	25-8	Note a
	Douglas fir-larch	#3	10-10	15-10	20-1	24-6
	Hem-fir	SS	12-5	19-6	25-8	Note a
	Hem-fir	#1	12-2	19-1	25-2	Note a
	Hem-fir	#2	11-7	18-2	24-0	Note a
	Hem-fir	#3	10-10	15-10	20-1	24-6
	Southern pine	SS	12-11	20-3	Note a	Note a
	Southern pine	#1	12-8	19-11	Note a	Note a
	Southern pine	#2	12-5	19-6	25-8	Note a
	Southern pine	#3	11-6	17-0	21-8	25-7
	Spruce-pine-fir	SS	12-2	19-1	25-2	Note a
	Spruce-pine-fir	#1	11-10	18-8	24-7	Note a
	Spruce-pine-fir	#2	11-10	18-8	24-7	Note a
	Spruce-pine-fir	#3	10-10	15-10	20-1	24-6
16	Douglas fir-larch	SS	11-11	18-9	24-8	Note a
	Douglas fir-larch	#1	11-6	18-1	23-10	Note a
	Douglas fir-larch	#2	11-3	17-8	23-0	Note a
	Douglas fir-larch	#3	9-5	13-9	17-5	21-3
	Hem-fir	SS	11-3	17-8	23-4	Note a
	Hem-fir	#1	11-0	17-4	22-10	Note a
	Hem-fir	#2	10-6	16-6	21-9	Note a
	Hem-fir	#3	9-5	13-9	17-5	21-3
	Southern pine	SS	11-9	18-5	24-3	Note a
	Southern pine	#1	11-6	18-1	23-1	Note a
	Southern pine	#2	11-3	17-8	23-4	Note a
	Southern pine	#3	10-0	14-9	18-9	22-2
	Spruce-pine-fir	SS	11-0	17-4	22-10	Note a
	Spruce-pine-fir	#1	10-9	16-11	22-4	Note a
	Spruce-pine-fir	#2	10-9	16-11	22-4	Note a
	Spruce-pine-fir	#3	9-5	13-9	17-5	21-3

(continued)

TABLE R802.4(1)—continued
CEILING JOIST SPANS FOR COMMON LUMBER SPECIES
(Uninhabitable attics without storage, live load = 10 psf, L/Δ = 240)

CEILING JOIST SPACING (inches)	SPECIES AND GRADE		DEAD LOAD = 5 psf			
			2 × 4	2 × 6	2 × 8	2 × 10
			Maximum ceiling joist spans			
			(feet - inches)	(feet - inches)	(feet - inches)	(feet - inches)
19.2	Douglas fir-larch	SS	11-3	17-8	23-3	Note a
	Douglas fir-larch	#1	10-10	17-0	22-5	Note a
	Douglas fir-larch	#2	10-7	16-7	21-0	25-8
	Douglas fir-larch	#3	8-7	12-6	15-10	19-5
	Hem-fir	SS	10-7	16-8	21-11	Note a
	Hem-fir	#1	10-4	16-4	21-6	Note a
	Hem-fir	#2	9-11	15-7	20-6	25-3
	Hem-fir	#3	8-7	12-6	15-10	19-5
	Southern -pine	SS	11-0	17-4	22-10	Note a
	Southern pine	#1	10-10	17-0	22-5	Note a
	Southern pine	#2	10-7	16-8	21-11	Note a
	Southern pine	#3	9-1	13-6	17-2	20-3
	Spruce-pine-fir	SS	10-4	16-4	21-6	Note a
	Spruce-pine-fir	#1	10-2	15-11	21-0	25-8
	Spruce-pine-fir	#2	10-2	15-11	21-0	25-8
	Spruce-pine-fir	#3	8-7	12-6	15-10	19-5
24	Douglas fir-larch	SS	10-5	16-4	21-7	Note a
	Douglas fir-larch	#1	10-0	15-9	20-1	24-6
	Douglas fir-larch	#2	9-10	14-10	18-9	22-11
	Douglas fir-larch	#3	7-8	11-2	14-2	17-4
	Hem-fir	SS	9-10	15-6	20-5	Note a
	Hem-fir	#1	9-8	15-2	19-7	23-11
	Hem-fir	#2	9-2	14-5	18-6	22-7
	Hem-fir	#3	7-8	11-2	14-2	17-4
	Southern pine	SS	10-3	16-1	21-2	Note a
	Southern pine	#1	10-0	15-9	20-10	Note a
	Southern pine	#2	9-10	15-6	20-1	23-11
	Southern pine	#3	8-2	12-0	15-4	18-1
	Spruce-pine-fir	SS	9-8	15-2	19-11	25-5
	Spruce-pine-fir	#1	9-5	14-9	18-9	22-11
	Spruce-pine-fir	#2	9-5	14-9	18-9	22-11
	Spruce-pine-fir	#3	7-8	11-2	14-2	17-4

Check sources for availability of lumber in lengths greater than 20 feet.
For SI: 1 inch = 25.4 mm, 1 foot = 304.8 mm, 1 pound per square foot = 0.0479kPa.
a. Span exceeds 26 feet in length.

TABLE R802.4(2)
CEILING JOIST SPANS FOR COMMON LUMBER SPECIES
(Uninhabitable attics with limited storage, live load = 20 psf, L/Δ = 240)

CEILING JOIST SPACING (inches)	SPECIES AND GRADE		DEAD LOAD = 10 psf			
			2 × 4	2 × 6	2 × 8	2 × 10
			Maximum ceiling joist spans			
			(feet - inches)	(feet - inches)	(feet - inches)	(feet - inches)
12	Douglas fir-larch	SS	10-5	16-4	21-7	Note a
	Douglas fir-larch	#1	10-0	15-9	20-1	24-6
	Douglas fir-larch	#2	9-10	14-10	18-9	22-11
	Douglas fir-larch	#3	7-8	11-2	14-2	17-4
	Hem-fir	SS	9-10	15-6	20-5	Note a
	Hem-fir	#1	9-8	15-2	19-7	23-11
	Hem-fir	#2	9-2	14-5	18-6	22-7
	Hem-fir	#3	7-8	11-2	14-2	17-4
	Southern pine	SS	10-3	16-1	21-2	Note a
	Southern pine	#1	10-0	15-9	20-10	Note a
	Southern pine	#2	9-10	15-6	20-1	23-11
	Southern pine	#3	8-2	12-0	15-4	18-1
	Spruce-pine-fir	SS	9-8	15-2	19-11	25-5
	Spruce-pine-fir	#1	9-5	14-9	18-9	22-11
	Spruce-pine-fir	#2	9-5	14-9	18-9	22-11
	Spruce-pine-fir	#3	7-8	11-2	14-2	17-4
16	Douglas fir-larch	SS	9-6	14-11	19-7	25-0
	Douglas fir-larch	#1	9-1	13-9	17-5	21-3
	Douglas fir-larch	#2	8-9	12-10	16-3	19-10
	Douglas fir-larch	#3	6-8	9-8	12-4	15-0
	Hem-fir	SS	8-11	14-1	18-6	23-8
	Hem-fir	#1	8-9	13-5	16-10	20-8
	Hem-fir	#2	8-4	12-8	16-0	19-7
	Hem-fir	#3	6-8	9-8	12-4	15-0
	Southern pine	SS	9-4	14-7	19-3	24-7
	Southern pine	#1	9-1	14-4	18-11	23-1
	Southern pine	#2	8-11	13-6	17-5	20-9
	Southern pine	#3	7-1	10-5	13-3	15-8
	Spruce-pine-fir	SS	8-9	13-9	18-1	23-1
	Spruce-pine-fir	#1	8-7	12-10	16-3	19-10
	Spruce-pine-fir	#2	8-7	12-10	16-3	19-10
	Spruce-pine-fir	#3	6-8	9-8	12-4	15-0

(continued)

TABLE R802.4(2)—continued
CEILING JOIST SPANS FOR COMMON LUMBER SPECIES
(Uninhabitable attics with limited storage, live load = 20 psf, L/Δ = 240)

CEILING JOIST SPACING (inches)	SPECIES AND GRADE		DEAD LOAD = 10 psf			
			2 × 4	2 × 6	2 × 8	2 × 10
			Maximum ceiling joist spans			
			(feet - inches)	(feet - inches)	(feet - inches)	(feet - inches)
19.2	Douglas fir-larch	SS	8-11	14-0	18-5	23-4
	Douglas fir-larch	#1	8-7	12-6	15-10	19-5
	Douglas fir-larch	#2	8-0	11-9	14-10	18-2
	Douglas fir-larch	#3	6-1	8-10	11-3	13-8
	Hem-fir	SS	8-5	13-3	17-5	22-3
	Hem-fir	#1	8-3	12-3	15-6	18-11
	Hem-fir	#2	7-10	11-7	14-8	17-10
	Hem-fir	#3	6-1	8-10	11-3	13-8
	Southern pine	SS	8-9	13-9	18-1	23-1
	Southern pine	#1	8-7	13-6	17-9	21-1
	Southern pine	#2	8-5	12-3	15-10	18-11
	Southern pine	#3	6-5	9-6	12-1	14-4
	Spruce-pine-fir	SS	8-3	12-11	17-1	21-8
	Spruce-pine-fir	#1	8-0	11-9	14-10	18-2
	Spruce-pine-fir	#2	8-0	11-9	14-10	18-2
	Spruce-pine-fir	#3	6-1	8-10	11-3	13-8
24	Douglas fir-larch	SS	8-3	13-0	17-1	20-11
	Douglas fir-larch	#1	7-8	11-2	14-2	17-4
	Douglas fir-larch	#2	7-2	10-6	13-3	16-3
	Douglas fir-larch	#3	5-5	7-11	10-0	12-3
	Hem-fir	SS	7-10	12-3	16-2	20-6
	Hem-fir	#1	7-6	10-11	13-10	16-11
	Hem-fir	#2	7-1	10-4	13-1	16-0
	Hem-fir	#3	5-5	7-11	10-0	12-3
	Southern pine	SS	8-1	12-9	16-10	21-6
	Southern pine	#1	8-0	12-6	15-10	18-10
	Southern pine	#2	7-8	11-0	14-2	16-11
	Southern pine	#3	5-9	8-6	10-10	12-10
	Spruce-pine-fir	SS	7-8	12-0	15-10	19-5
	Spruce-pine-fir	#1	7-2	10-6	13-3	16-3
	Spruce-pine-fir	#2	7-2	10-6	13-3	16-3
	Spruce-pine-fir	#3	5-5	7-11	10-0	12-3

Check sources for availability of lumber in lengths greater than 20 feet.
For SI: 1 inch = 25.4 mm, 1 foot = 304.8 mm, 1 pound per square foot = 0.0479kPa.
a. Span exceeds 26 feet in length.

TABLE R802.5.1(1)
RAFTER SPANS FOR COMMON LUMBER SPECIES
(Roof live load=20 psf, ceiling not attached to rafters, L/Δ = 180)

RAFTER SPACING (inches)	SPECIES AND GRADE		DEAD LOAD = 10 psf					DEAD LOAD = 20 psf				
			2 × 4	2 × 6	2 × 8	2 × 10	2 × 12	2 × 4	2 × 6	2 × 8	2 × 10	2 × 12
			Maximum rafter spans[a]									
			(feet - inches)	(feet - inches)	(feet - inches)	(feet - inches)	(feet - inches)	(feet - inches)	(feet - inches)	(feet - inches)	(feet - inches)	(feet - inches)
12	Douglas fir-larch	SS	11-6	18-0	23-9	Note b	Note b	11-6	18-0	23-5	Note b	Note b
	Douglas fir-larch	#1	11-1	17-4	22-5	Note b	Note b	10-6	15-4	19-5	23-9	Note b
	Douglas fir-larch	#2	10-10	16-7	21-0	25-8	Note b	9-10	14-4	18-2	22-3	25-9
	Douglas fir-larch	#3	8-7	12-6	15-10	19-5	22-6	7-5	10-10	13-9	16-9	19-6
	Hem-fir	SS	10-10	17-0	22-5	Note b	Note b	10-10	17-0	22-5	Note b	Note b
	Hem-fir	#1	10 -7	16-8	21-10	Note b	Note b	10-3	14-11	18-11	23-2	Note b
	Hem-fir	#2	10-1	15-11	20-8	25-3	Note b	9-8	14-2	17-11	21-11	25-5
	Hem-fir	#3	8-7	12-6	15-10	19-5	22-6	7-5	10-10	13-9	16-9	19-6
	Southern pine	SS	11-3	17-8	23-4	Note b	Note b	11-3	17-8	23-4	Note b	Note b
	Southern pine	#1	11-1	17-4	22-11	Note b	Note b	11-1	17-3	21-9	25-10	Note b
	Southern pine	#2	10-10	17-0	22-5	Note b	Note b	10-6	15-1	19-5	23-2	Note b
	Southern pine	#3	9-1	13-6	17-2	20-3	24-1	7-11	11-8	14-10	17-6	20-11
	Spruce-pine-fir	SS	10-7	16-8	21-11	Note b	Note b	10-7	16-8	21-9	Note b	Note b
	Spruce-pine-fir	#1	10-4	16-3	21-0	25-8	Note b	9-10	14-4	18-2	22-3	25-9
	Spruce-pine-fir	#2	10-4	16-3	21-0	25-8	Note b	9-10	14-4	18-2	22-3	25-9
	Spruce-pine-fir	#3	8-7	12-6	15-10	19-5	22-6	7-5	10-10	13-9	16-9	19-6
16	Douglas fir-larch	SS	10-5	16-4	21-7	Note b	Note b	10-5	16-0	20-3	24-9	Note b
	Douglas fir-larch	#1	10-0	15-4	19-5	23-9	Note b	9-1	13-3	16-10	20-7	23-10
	Douglas fir-larch	#2	9-10	14-4	18-2	22-3	25-9	8-6	12-5	15-9	19-3	22-4
	Douglas fir-larch	#3	7-5	10-10	13-9	16-9	19-6	6-5	9-5	11-11	14-6	16-10
	Hem-fir	SS	9-10	15-6	20-5	Note b	Note b	9-10	15-6	19-11	24-4	Note b
	Hem-fir	#1	9-8	14-11	18-11	23-2	Note b	8-10	12-11	16-5	20-0	23-3
	Hem-fir	#2	9-2	14-2	17-11	21-11	25-5	8-5	12-3	15-6	18-11	22-0
	Hem-fir	#3	7-5	10-10	13-9	16-9	19-6	6-5	9-5	11-11	14-6	16-10
	Southern pine	SS	10-3	16-1	21-2	Note b	Note b	10-3	16-1	21-2	Note b	Note b
	Southern pine	#1	10-0	15-9	20-10	25-10	Note b	10-0	15-0	18-10	22-4	Note b
	Southern pine	#2	9-10	15-1	19-5	23-2	Note b	9-1	13-0	16-10	20-1	23-7
	Southern pine	#3	7-11	11-8	14-10	17-6	20-11	6-10	10-1	12-10	15-2	18-1
	Spruce-pine-fir	SS	9-8	15-2	19-11	25-5	Note b	9-8	14-10	18-10	23-0	Note b
	Spruce-pine-fir	#1	9-5	14-4	18-2	22-3	25-9	8-6	12-5	15-9	19-3	22-4
	Spruce-pine-fir	#2	9-5	14-4	18-2	22-3	25-9	8-6	12-5	15-9	19-3	22-4
	Spruce-pine-fir	#3	7-5	10-10	13-9	16-9	19-6	6-5	9-5	11-11	14-6	16-10
19.2	Douglas fir-larch	SS	9-10	15-5	20-4	25-11	Note b	9-10	14-7	18-6	22-7	Note b
	Douglas fir-larch	#1	9-5	14-0	17-9	21-8	25-2	8-4	12-2	15-4	18-9	21-9
	Douglas fir-larch	#2	8-11	13-1	16-7	20-3	23-6	7-9	11-4	14-4	17-7	20-4
	Douglas fir-larch	#3	6-9	9-11	12-7	15-4	17-9	5-10	8-7	10-10	13-3	15-5
	Hem-fir	SS	9-3	14-7	19-2	24-6	Note b	9-3	14-4	18-2	22-3	25-9
	Hem-fir	#1	9-1	13-8	17-4	21-1	24-6	8-1	11-10	15-0	18-4	21-3
	Hem-fir	#2	8-8	12-11	16-4	20-0	23-2	7-8	11-2	14-2	17-4	20-1
	Hem-fir	#3	6-9	9-11	12-7	15-4	17-9	5-10	8-7	10-10	13-3	15-5
	Southern pine	SS	9-8	15-2	19-11	25-5	Note b	9-8	15-2	19-11	25-5	Note b
	Southern pine	#1	9-5	14-10	19-7	23-7	Note b	9-3	13-8	17-2	20-5	24-4
	Southern pine	#2	9-3	13-9	17-9	21-2	24-10	8-4	11-11	15-4	18-4	21-6
	Southern pine	#3	7-3	10-8	13-7	16-0	19-1	6-3	9-3	11-9	13-10	16-6
	Spruce-pine-fir	SS	9-1	14-3	18-9	23-11	Note b	9-1	13-7	17-2	21-0	24-4
	Spruce-pine-fir	#1	8-10	13-1	16-7	20-3	23-6	7-9	11-4	14-4	17-7	20-4
	Spruce-pine-fir	#2	8-10	13-1	16-7	20-3	23-6	7-9	11-4	14-4	17-7	20-4
	Spruce-pine-fir	#3	6-9	9-11	12-7	15-4	17-9	5-10	8-7	10-10	13-3	15-5

(continued)

TABLE R802.5.1(1)—continued
RAFTER SPANS FOR COMMON LUMBER SPECIES
(Roof live load=20 psf, ceiling not attached to rafters, L/Δ = 180)

RAFTER SPACING (inches)	SPECIES AND GRADE		DEAD LOAD = 10 psf					DEAD LOAD = 20 psf				
			2 × 4	2 × 6	2 × 8	2 × 10	2 × 12	2 × 4	2 × 6	2 × 8	2 × 10	2 × 12
			Maximum rafter spans[a]									
			(feet - inches)	(feet - inches)	(feet - inches)	(feet - inches)	(feet - inches)	(feet - inches)	(feet - inches)	(feet - inches)	(feet - inches)	(feet - inches)
24	Douglas fir-larch	SS	9-1	14-4	18-10	23-4	Note b	8-11	13-1	16-7	20-3	23-5
	Douglas fir-larch	#1	8-7	12-6	15-10	19-5	22-6	7-5	10-10	13-9	16-9	19-6
	Douglas fir-larch	#2	8-0	11-9	14-10	18-2	21-0	6-11	10-2	12-10	15-8	18-3
	Douglas fir-larch	#3	6-1	8-10	11-3	13-8	15-11	5-3	7-8	9-9	11-10	13-9
	Hem-fir	SS	8-7	13-6	17-10	22-9	Note b	8-7	12-10	16-3	19-10	23-0
	Hem-fir	#1	8-4	12-3	15-6	18-11	21-11	7-3	10-7	13-5	16-4	19-0
	Hem-fir	#2	7-11	11-7	14-8	17-10	20-9	6-10	10-0	12-8	15-6	17-11
	Hem-fir	#3	6-1	8-10	11-3	13-8	15-11	5-3	7-8	9-9	11-10	13-9
	Southern pine	SS	8-11	14-1	18-6	23-8	Note b	8-11	14-1	18-6	22-11	Note b
	Southern pine	#1	8-9	13-9	17-9	21-1	25-2	8-3	12-3	15-4	18-3	21-9
	Southern pine	#2	8-7	12-3	15-10	18-11	22-2	7-5	10-8	13-9	16-5	19-3
	Southern pine	#3	6-5	9-6	12-1	14-4	17-1	5-7	8-3	10-6	12-5	14-9
	Spruce-pine-fir	SS	8-5	13-3	17-5	21-8	25-2	8-4	12-2	15-4	18-9	21-9
	Spruce-pine-fir	#1	8-0	11-9	14-10	18-2	21-0	6-11	10-2	12-10	15-8	18-3
	Spruce-pine-fir	#2	8-0	11-9	14-10	18-2	21-0	6-11	10-2	12-10	15-8	18-3
	Spruce-pine-fir	#3	6-1	8-10	11-3	13-8	15-11	5-3	7-8	9-9	11-10	13-9

Check sources for availability of lumber in lengths greater than 20 feet.

For SI: 1 inch = 25.4 mm, 1 foot = 304.8 mm, 1 pound per square foot = 0.0479 kPa.

a. The tabulated rafter spans assume that ceiling joists are located at the bottom of the attic space or that some other method of resisting the outward push of the rafters on the bearing walls, such as rafter ties, is provided at that location. When ceiling joists or rafter ties are located higher in the attic space, the rafter spans shall be multiplied by the factors given below:

H_C/H_R	Rafter Span Adjustment Factor
1/3	0.67
1/4	0.76
1/5	0.83
1/6	0.90
1/7.5 or less	1.00

where:

H_C = Height of ceiling joists or rafter ties measured vertically above the top of the rafter support walls.

H_R = Height of roof ridge measured vertically above the top of the rafter support walls.

b. Span exceeds 26 feet in length.

TABLE R802.5.1(2)
RAFTER SPANS FOR COMMON LUMBER SPECIES
(Roof live load=20 psf, ceiling attached to rafters, L/Δ = 240)

RAFTER SPACING (inches)	SPECIES AND GRADE		DEAD LOAD = 10 psf					DEAD LOAD = 20 psf				
			2 × 4	2 × 6	2 × 8	2 × 10	2 × 12	2 × 4	2 × 6	2 × 8	2 × 10	2 × 12
			Maximum rafter spans[a]									
			(feet - inches)	(feet - inches)	(feet - inches)	(feet - inches)	(feet - inches)	(feet - inches)	(feet - inches)	(feet - inches)	(feet - inches)	(feet - inches)
12	Douglas fir-larch	SS	10-5	16-4	21-7	Note b	Note b	10-5	16-4	21-7	Note b	Note b
	Douglas fir-larch	#1	10-0	15-9	20-10	Note b	Note b	10-0	15-4	19-5	23-9	Note b
	Douglas fir-larch	#2	9-10	15-6	20-5	25-8	Note b	9-10	14-4	18-2	22-3	25-9
	Douglas fir-larch	#3	8-7	12-6	15-10	19-5	22-6	7-5	10-10	13-9	16-9	19-6
	Hem-fir	SS	9-10	15-6	20-5	Note b	Note b	9-10	15-6	20-5	Note b	Note b
	Hem-fir	#1	9-8	15-2	19-11	25-5	Note b	9-8	14-11	18-11	23-2	Note b
	Hem-fir	#2	9-2	14-5	19-0	24-3	Note b	9-2	14-2	17-11	21-11	25-5
	Hem-fir	#3	8-7	12-6	15-10	19-5	22-6	7-5	10-10	13-9	16-9	19-6
	Southern pine	SS	10-3	16-1	21-2	Note b	Note b	10-3	16-1	21-2	Note b	Note b
	Southern pine	#1	10-0	15-9	20-10	Note b	Note b	10-0	15-9	20-10	25-10	Note b
	Southern pine	#2	9-10	15-6	20-5	Note b	Note b	9-10	15-1	19-5	23-2	Note b
	Southern pine	#3	9-1	13-6	17-2	20-3	24-1	7-11	11-8	14-10	17-6	20-11
	Spruce-pine-fir	SS	9-8	15-2	19-11	25-5	Note b	9-8	15-2	19-11	25-5	Note b
	Spruce-pine-fir	#1	9-5	14-9	19-6	24-10	Note b	9-5	14-4	18-2	22-3	25-9
	Spruce-pine-fir	#2	9-5	14-9	19-6	24-10	Note b	9-5	14-4	18-2	22-3	25-9
	Spruce-pine-fir	#3	8-7	12-6	15-10	19-5	22-6	7-5	10-10	13-9	16-9	19-6
16	Douglas fir-larch	SS	9-6	14-11	19-7	25-0	Note b	9-6	14-11	19-7	24-9	Note b
	Douglas fir-larch	#1	9-1	14-4	18-11	23-9	Note b	9-1	13-3	16-10	20-7	23-10
	Douglas fir-larch	#2	8-11	14-1	18-2	22-3	25-9	8-6	12-5	15-9	19-3	22-4
	Douglas fir-larch	#3	7-5	10-10	13-9	16-9	19-6	6-5	9-5	11-11	14-6	16-10
	Hem-fir	SS	8-11	14-1	18-6	23-8	Note b	8-11	14-1	18-6	23-8	Note b
	Hem-fir	#1	8-9	13-9	18-1	23-1	Note b	8-9	12-11	16-5	20-0	23-3
	Hem-fir	#2	8-4	13-1	17-3	21-11	25-5	8-4	12-3	15-6	18-11	22-0
	Hem-fir	#3	7-5	10-10	13-9	16-9	19-6	6-5	9-5	11-11	14-6	16-10
	Southern pine	SS	9-4	14-7	19-3	24-7	Note b	9-4	14-7	19-3	24-7	Note b
	Southern pine	#1	9-1	14-4	18-11	24-1	Note b	9-1	14-4	18-10	22-4	Note b
	Southern pine	#2	8-11	14-1	18-6	23-2	Note b	8-11	13-0	16-10	20-1	23-7
	Southern pine	#3	7-11	11-8	14-10	17-6	20-11	6-10	10-1	12-10	15-2	18-1
	Spruce-pine-fir	SS	8-9	13-9	18-1	23-1	Note b	8-9	13-9	18-1	23-0	Note b
	Spruce-pine-fir	#1	8-7	13-5	17-9	22-3	25-9	8-6	12-5	15-9	19-3	22-4
	Spruce-pine-fir	#2	8-7	13-5	17-9	22-3	25-9	8-6	12-5	15-9	19-3	22-4
	Spruce-pine-fir	#3	7-5	10-10	13-9	16-9	19-6	6-5	9-5	11-11	14-6	16-10
19.2	Douglas fir-larch	SS	8-11	14-0	18-5	23-7	Note b	8-11	14-0	18-5	22-7	Note b
	Douglas fir-larch	#1	8-7	13-6	17-9	21-8	25-2	8-4	12-2	15-4	18-9	21-9
	Douglas fir-larch	#2	8-5	13-1	16-7	20-3	23-6	7-9	11-4	14-4	17-7	20-4
	Douglas fir-larch	#3	6-9	9-11	12-7	15-4	17-9	5-10	8-7	10-10	13-3	15-5
	Hem-fir	SS	8-5	13-3	17-5	22-3	Note b	8-5	13-3	17-5	22-3	25-9
	Hem-fir	#1	8-3	12-11	17-1	21-1	24-6	8-1	11-10	15-0	18-4	21-3
	Hem-fir	#2	7-10	12-4	16-3	20-0	23-2	7-8	11-2	14-2	17-4	20-1
	Hem-fir	#3	6-9	9-11	12-7	15-4	17-9	5-10	8-7	10-10	13-3	15-5

(continued)

TABLE R802.5.1(2)—continued
RAFTER SPANS FOR COMMON LUMBER SPECIES
(Roof live load=20 psf, ceiling attached to rafters, L/Δ = 240)

RAFTER SPACING (inches)	SPECIES AND GRADE		DEAD LOAD = 10 psf					DEAD LOAD = 20 psf				
			2 × 4	2 × 6	2 × 8	2 × 10	2 × 12	2 × 4	2 × 6	2 × 8	2 × 10	2 × 12
			Maximum rafter spans[a]									
			(feet - inches)	(feet - inches)	(feet - inches)	(feet - inches)	(feet - inches)	(feet - inches)	(feet - inches)	(feet - inches)	(feet - inches)	(feet - inches)
19.2	Southern pine	SS	8-9	13-9	18-1	23-1	Note b	8-9	13-9	18-1	23-1	Note b
	Southern pine	#1	8-7	13-6	17-9	22-8	Note b	8-7	13-6	17-2	20-5	24-4
	Southern pine	#2	8-5	13-3	17-5	21-2	24-10	8-4	11-11	15-4	18-4	21-6
	Southern pine	#3	7-3	10-8	13-7	16-0	19-1	6-3	9-3	11-9	13-10	16-6
	Spruce-pine-fir	SS	8-3	12-11	17-1	21-9	Note b	8-3	12-11	17-1	21-0	24-4
	Spruce-pine-fir	#1	8-1	12-8	16-7	20-3	23-6	7-9	11-4	14-4	17-7	20-4
	Spruce-pine-fir	#2	8-1	12-8	16-7	20-3	23-6	7-9	11-4	14-4	17-7	20-4
	Spruce-pine-fir	#3	6-9	9-11	12-7	15-4	17-9	5-10	8-7	10-10	13-3	15-5
24	Douglas fir-larch	SS	8-3	13-0	17-2	2 1-10	Note b	8-3	13-0	16-7	20-3	23-5
	Douglas fir-larch	#1	8-0	12-6	15-10	19-5	22-6	7-5	10-10	13-9	16-9	19-6
	Douglas fir-larch	#2	7-10	11-9	14-10	18-2	21-0	6-11	10-2	12-10	15-8	18-3
	Douglas fir-larch	#3	6-1	8-10	11-3	13-8	15-11	5-3	7-8	9-9	11-10	13-9
	Hem-fir	SS	7-10	12-3	16-2	20-8	25-1	7-10	12-3	16-2	19-10	23-0
	Hem-fir	#1	7-8	12-0	15-6	18-11	21-11	7-3	10-7	13-5	16-4	19-0
	Hem-fir	#2	7-3	11-5	14-8	17-10	20-9	6-10	10-0	12-8	15-6	17-11
	Hem-fir	#3	6-1	8-10	11-3	13-8	15-11	5-3	7-8	9-9	11-10	13-9
	Southern pine	SS	8-1	12-9	16-10	21-6	Note b	8-1	12-9	16-10	21-6	Note b
	Southern pine	#1	8-0	12-6	16-6	21-1	25-2	8-0	12-3	15-4	18-3	21-9
	Southern pine	#2	7-10	12-3	15-10	18-11	22-2	7-5	10-8	13-9	16-5	19-3
	Southern pine	#3	6-5	9-6	12-1	14-4	17-1	5-7	8-3	10-6	12-5	14-9
	Spruce-pine-fir	SS	7-8	12-0	15-10	20-2	24-7	7-8	12-0	15-4	18-9	21-9
	Spruce-pine-fir	#1	7-6	11-9	14-10	18-2	21-0	6-11	10-2	12-10	15-8	18-3
	Spruce-pine-fir	#2	7-6	11-9	14-10	18-2	21-0	6-11	10-2	12-10	15-8	18-3
	Spruce-pine-fir	#3	6-1	8-10	11-3	13-8	15-11	5-3	7-8	9-9	11-10	13-9

Check sources for availability of lumber in lengths greater than 20 feet.

For SI: 1 inch = 25.4 mm, 1 foot = 304.8 mm, 1 pound per square foot = 0.0479 kPa.

a. The tabulated rafter spans assume that ceiling joists are located at the bottom of the attic space or that some other method of resisting the outward push of the rafters on the bearing walls, such as rafter ties, is provided at that location. When ceiling joists or rafter ties are located higher in the attic space, the rafter spans shall be multiplied by the factors given below:

H_C/H_R	Rafter Span Adjustment Factor
1/3	0.67
1/4	0.76
1/5	0.83
1/6	0.90
1/7.5 or less	1.00

where:

H_C = Height of ceiling joists or rafter ties measured vertically above the top of the rafter support walls.

H_R = Height of roof ridge measured vertically above the top of the rafter support walls.

b. Span exceeds 26 feet in length.

TABLE R802.5.1(3)
RAFTER SPANS FOR COMMON LUMBER SPECIES
(Ground snow load=30 psf, ceiling not attached to rafters, L/Δ = 180)

RAFTER SPACING (inches)	SPECIES AND GRADE		DEAD LOAD = 10 psf					DEAD LOAD = 20 psf				
			2 × 4	2 × 6	2 × 8	2 × 10	2 × 12	2 × 4	2 × 6	2 × 8	2 × 10	2 × 12
			Maximum rafter spans[a]									
			(feet - inches)	(feet - inches)	(feet - inches)	(feet - inches)	(feet - inches)	(feet - inches)	(feet - inches)	(feet - inches)	(feet - inches)	(feet - inches)
12	Douglas fir-larch	SS	10-0	15-9	20-9	Note b	Note b	10-0	15-9	20-1	24-6	Note b
	Douglas fir-larch	#1	9-8	14-9	18-8	22-9	Note b	9-0	13-2	16-8	20-4	23-7
	Douglas fir-larch	#2	9-5	13-9	17-5	21-4	24-8	8-5	12-4	15-7	19-1	22-1
	Douglas fir-larch	#3	7-1	10-5	13-2	16-1	18-8	6-4	9-4	11-9	14-5	16-8
	Hem-fir	SS	9-6	14-10	19-7	25-0	Note b	9-6	14-10	19-7	24-1	Note b
	Hem-fir	#1	9-3	14-4	18-2	22-2	25-9	8-9	12-10	16-3	19-10	23-0
	Hem-fir	#2	8-10	13-7	17-2	21-0	24-4	8-4	12-2	15-4	18-9	21-9
	Hem-fir	#3	7-1	10-5	13-2	16-1	18-8	6-4	9-4	11-9	14-5	16-8
	Southern pine	SS	9-10	15-6	20-5	Note b	Note b	9-10	15-6	20-5	Note b	Note b
	Southern pine	#1	9-8	15-2	20-0	24-9	Note b	9-8	14-10	18-8	22-2	Note b
	Southern pine	#2	9-6	14-5	18-8	22-3	Note b	9-0	12-11	16-8	19-11	23-4
	Southern pine	#3	7-7	11-2	14-3	16-10	20-0	6-9	10-0	12-9	15-1	17-11
	Spruce-pine-fir	SS	9-3	14-7	19-2	24-6	Note b	9-3	14-7	18-8	22-9	Note b
	Spruce-pine-fir	#1	9-1	13-9	17-5	21-4	24-8	8-5	12-4	15-7	19-1	22-1
	Spruce-pine-fir	#2	9-1	13-9	17-5	21-4	24-8	8-5	12-4	15-7	19-1	22-1
	Spruce-pine-fir	#3	7-1	10-5	13-2	16-1	18-8	6-4	9-4	11-9	14-5	16-8
16	Douglas fir-larch	SS	9-1	14-4	18-10	23-9	Note b	9-1	13-9	17-5	21-3	24-8
	Douglas fir-larch	#1	8-9	12-9	16-2	19-9	22-10	7-10	11-5	14-5	17-8	20-5
	Douglas fir-larch	#2	8-2	11-11	15-1	18-5	21-5	7-3	10-8	13-6	16-6	19-2
	Douglas fir-larch	#3	6-2	9-0	11-5	13-11	16-2	5-6	8-1	10-3	12-6	14-6
	Hem-fir	SS	8-7	13-6	17-10	22-9	Note b	8-7	13-6	17-1	20-10	24-2
	Hem-fir	#1	8-5	12-5	15-9	19-3	22-3	7-7	11-1	14-1	17-2	19-11
	Hem-fir	#2	8-0	11-9	14-11	18-2	21-1	7-2	10-6	13-4	16-3	18-10
	Hem-fir	#3	6-2	9-0	11-5	13-11	16-2	5-6	8-1	10-3	12-6	14-6
	Southern pine	SS	8-11	14-1	18-6	23-8	Note b	8-11	14-1	18-6	23-8	Note b
	Southern pine	#1	8-9	13-9	18-1	21-5	25-7	8-8	12-10	16-2	19-2	22-10
	Southern pine	#2	8-7	12-6	16-2	19-3	22-7	7-10	11-2	14-5	17-3	20-2
	Southern pine	#3	6-7	9-8	12-4	14-7	17-4	5-10	8-8	11-0	13-0	15-6
	Spruce-pine-fir	SS	8-5	13-3	17-5	22-1	25-7	8-5	12-9	16-2	19-9	22-10
	Spruce-pine-fir	#1	8-2	11-11	15-1	18-5	21-5	7-3	10-8	13-6	16-6	19-2
	Spruce-pine-fir	#2	8-2	11-11	15-1	18-5	21-5	7-3	10-8	13-6	16-6	19-2
	Spruce-pine-fir	#3	6-2	9-0	11-5	13-11	16-2	5-6	8-1	10-3	12-6	14-6
19.2	Douglas fir-larch	SS	8-7	13-6	17-9	21-8	25-2	8-7	12-6	15-10	19-5	22-6
	Douglas fir-larch	#1	7-11	11-8	14-9	18-0	20-11	7-1	10-5	13-2	16-1	18-8
	Douglas fir-larch	#2	7-5	10-11	13-9	16-10	19-6	6-8	9-9	12-4	15-1	17-6
	Douglas fir-larch	#3	5-7	8-3	10-5	12-9	14-9	5-0	7-4	9-4	11-5	13-2
	Hem-fir	SS	8-1	12-9	16-9	21-4	24-8	8-1	12-4	15-7	19-1	22-1
	Hem-fir	#1	7-9	11-4	14-4	17-7	20-4	6-11	10-2	12-10	15-8	18-2
	Hem-fir	#2	7-4	10-9	13-7	16-7	19-3	6-7	9-7	12-2	14-10	17-3
	Hem-fir	#3	5-7	8-3	10-5	12-9	14-9	5-0	7-4	9-4	11-5	13-2

(continued)

TABLE R802.5.1(3)—continued
RAFTER SPANS FOR COMMON LUMBER SPECIES
(Ground snow load=30 psf, ceiling not attached to rafters, L/Δ = 180)

RAFTER SPACING (inches)	SPECIES AND GRADE		DEAD LOAD = 10 psf					DEAD LOAD = 20 psf				
			2 × 4	2 × 6	2 × 8	2 × 10	2 × 12	2 × 4	2 × 6	2 × 8	2 × 10	2 × 12
			Maximum rafter spans[a]									
			(feet - inches)	(feet - inches)	(feet - inches)	(feet - inches)	(feet - inches)	(feet - inches)	(feet - inches)	(feet - inches)	(feet - inches)	(feet - inches)
19.2	Southern pine	SS	8-5	13-3	17-5	22-3	Note b	8-5	13-3	17-5	22-0	25-9
	Southern pine	#1	8-3	13-0	16-6	19-7	23-4	7-11	11-9	14-9	17-6	20-11
	Southern pine	#2	7-11	11-5	14-9	17-7	20-7	7-1	10-2	13-2	15-9	18-5
	Southern pine	#3	6-0	8-10	11-3	13-4	15-10	5-4	7-11	10-1	11-11	14-2
	Spruce-pine-fir	SS	7-11	12-5	16-5	20-2	23-4	7-11	11-8	14-9	18-0	20-11
	Spruce-pine-fir	#1	7-5	10-11	13-9	16-10	19-6	6-8	9-9	12-4	15-1	17-6
	Spruce-pine-fir	#2	7-5	10-11	13-9	16-10	19-6	6-8	9-9	12-4	15-1	17-6
	Spruce-pine-fir	#3	5-7	8-3	10-5	12-9	14-9	5-0	7-4	9-4	11-5	13-2
24	Douglas fir-larch	SS	7-11	12-6	15-10	19-5	22-6	7-8	11-3	14-2	17-4	20-1
	Douglas fir-larch	#1	7-1	10-5	13-2	16-1	18-8	6-4	9-4	11-9	14-5	16-8
	Douglas fir-larch	#2	6-8	9-9	12-4	15-1	17-6	5-11	8-8	11-0	13-6	15-7
	Douglas fir-larch	#3	5-0	7-4	9-4	11-5	13-2	4-6	6-7	8-4	10-2	11-10
	Hem-fir	SS	7-6	11-10	15-7	19-1	22-1	7-6	11-0	13-11	17-0	19-9
	Hem-fir	#1	6-11	10-2	12-10	15-8	18-2	6-2	9-1	11-6	14-0	16-3
	Hem-fir	#2	6-7	9-7	12-2	14-10	17-3	5-10	8-7	10-10	13-3	15-5
	Hem-fir	#3	5-0	7-4	9-4	11-5	13-2	4-6	6-7	8-4	10-2	11-10
	Southern pine	SS	7-10	12-3	16-2	20-8	25-1	7-10	12-3	16-2	19-8	23-0
	Southern pine	#1	7-8	11-9	14-9	17-6	20-11	7-1	10-6	13-2	15-8	18-8
	Southern pine	#2	7-1	10-2	13-2	15-9	18-5	6-4	9-2	11-9	14-1	16-6
	Southern pine	#3	5-4	7-11	10-1	11-11	14-2	4-9	7-1	9-0	10-8	12-8
	Spruce-pine-fir	SS	7-4	11-7	14-9	18-0	20-11	7-1	10-5	13-2	16-1	18-8
	Spruce-pine-fir	#1	6-8	9-9	12-4	15-1	17-6	5-11	8-8	11-0	13-6	15-7
	Spruce-pine-fir	#2	6-8	9-9	12-4	15-1	17-6	5-11	8-8	11-0	13-6	15-7
	Spruce-pine-fir	#3	5-0	7-4	9-4	11-5	13-2	4-6	6-7	8-4	10-2	11-10

Check sources for availability of lumber in lengths greater than 20 feet.

For SI: 1 inch = 25.4 mm, 1 foot = 304.8 mm, 1 pound per square foot = 0.0479 kPa.

a. The tabulated rafter spans assume that ceiling joists are located at the bottom of the attic space or that some other method of resisting the outward push of the rafters on the bearing walls, such as rafter ties, is provided at that location. When ceiling joists or rafter ties are located higher in the attic space, the rafter spans shall be multiplied by the factors given below:

H_C/H_R	Rafter Span Adjustment Factor
1/3	0.67
1/4	0.76
1/5	0.83
1/6	0.90
1/7.5 or less	1.00

where:

H_C = Height of ceiling joists or rafter ties measured vertically above the top of the rafter support walls.

H_R = Height of roof ridge measured vertically above the top of the rafter support walls.

b. Span exceeds 26 feet in length.

TABLE R802.5.1(4)
RAFTER SPANS FOR COMMON LUMBER SPECIES
(Ground snow load=50 psf, ceiling not attached to rafters, L/Δ = 180)

RAFTER SPACING (inches)	SPECIES AND GRADE		DEAD LOAD = 10 psf					DEAD LOAD = 20 psf				
			2 × 4	2 × 6	2 × 8	2 × 10	2 × 12	2 × 4	2 × 6	2 × 8	2 × 10	2 × 12
			Maximum rafter spans[a]									
			(feet - inches)	(feet - inches)	(feet - inches)	(feet - inches)	(feet - inches)	(feet - inches)	(feet - inches)	(feet - inches)	(feet - inches)	(feet - inches)
12	Douglas fir-larch	SS	8-5	13-3	17-6	22-4	26-0	8-5	13-3	17-0	20-9	24-0
	Douglas fir-larch	#1	8-2	12-0	15-3	18-7	21-7	7-7	11-2	14-1	17-3	20-0
	Douglas fir-larch	#2	7-8	11-3	14-3	17-5	20-2	7-1	10-5	13-2	16-1	18-8
	Douglas fir-larch	#3	5-10	8-6	10-9	13-2	15-3	5-5	7-10	10-0	12-2	14-1
	Hem-fir	SS	8-0	12-6	16-6	21-1	25-6	8-0	12-6	16-6	20-4	23-7
	Hem-fir	#1	7-10	11-9	14-10	18-1	21-0	7-5	10-10	13-9	16-9	19-5
	Hem-fir	#2	7-5	11-1	14-0	17-2	19-11	7-0	10-3	13-0	15-10	18-5
	Hem-fir	#3	5-10	8-6	10-9	13-2	15-3	5-5	7-10	10-0	12-2	14-1
	Southern pine	SS	8-4	13-0	17-2	21-11	Note b	8-4	13-0	17-2	21-11	Note b
	Southern pine	#1	8-2	12-10	16-10	20-3	24-1	8-2	12-6	15-9	18-9	22-4
	Southern pine	#2	8-0	11-9	15-3	18-2	21-3	7-7	10-11	14-1	16-10	19-9
	Southern pine	#3	6-2	9-2	11-8	13-9	16-4	5-9	8-5	10-9	12-9	15-2
	Spruce-pine-fir	SS	7-10	12-3	16-2	20-8	24-1	7-10	12-3	15-9	19-3	22-4
	Spruce-pine-fir	#1	7-8	11-3	14-3	17-5	20-2	7-1	10-5	13-2	16-1	18-8
	Spruce-pine-fir	#2	7-8	11-3	14-3	17-5	20-2	7-1	10-5	13-2	16-1	18-8
	Spruce-pine-fir	#3	5-10	8-6	10-9	13-2	15-3	5-5	7-10	10-0	12-2	14-1
16	Douglas fir-larch	SS	7-8	12-1	15-10	19-5	22-6	7-8	11-7	14-8	17-11	20-10
	Douglas fir-larch	#1	7-1	10-5	13-2	16-1	18-8	6-7	9-8	12-2	14-11	17-3
	Douglas fir-larch	#2	6-8	9-9	12-4	15-1	17-6	6-2	9-0	11-5	13-11	16-2
	Douglas fir-larch	#3	5-0	7-4	9-4	11-5	13-2	4-8	6-10	8-8	10-6	12-3
	Hem-fir	SS	7-3	11-5	15-0	19-1	22-1	7-3	11-5	14-5	17-8	20-5
	Hem-fir	#1	6-11	10-2	12-10	15-8	18-2	6-5	9-5	11-11	14-6	16-10
	Hem-fir	#2	6-7	9-7	12-2	14-10	17-3	6-1	8-11	11-3	13-9	15-11
	Hem-fir	#3	5-0	7-4	9-4	11-5	13-2	4-8	6-10	8-8	10-6	12-3
	Southern pine	SS	7-6	11-10	15-7	19-11	24-3	7-6	11-10	15-7	19-11	23-10
	Southern pine	#1	7-5	11-7	14-9	17-6	20-11	7-4	10-10	13-8	16-2	19-4
	Southern pine	#2	7-1	10-2	13-2	15-9	18-5	6-7	9-5	12-2	14-7	17-1
	Southern pine	#3	5-4	7-11	10-1	11-11	14-2	4-11	7-4	9-4	11-0	13-1
	Spruce-pine-fir	SS	7-1	11-2	14-8	18-0	20-11	7-1	10-9	13-8	15-11	19-4
	Spruce-pine-fir	#1	6-8	9-9	12-4	15-1	17-6	6-2	9-0	11-5	13-11	16-2
	Spruce-pine-fir	#2	6-8	9-9	12-4	15-1	17-6	6-2	9-0	11-5	13-11	16-2
	Spruce-pine-fir	#3	5-0	7-4	9-4	11-5	13-2	4-8	6-10	8-8	10-6	12-3
19.2	Douglas fir-larch	SS	7-3	11-4	14-6	17-8	20-6	7-3	10-7	13-5	16-5	19-0
	Douglas fir-larch	#1	6-6	9-6	12-0	14-8	17-1	6-0	8-10	11-2	13-7	15-9
	Douglas fir-larch	#2	6-1	8-11	11-3	13-9	15-11	5-7	8-3	10-5	12-9	14-9
	Douglas fir-larch	#3	4-7	6-9	8-6	10-5	12-1	4-3	6-3	7-11	9-7	11-2
	Hem-fir	SS	6-10	10-9	14-2	17-5	20-2	6-10	10-5	13-2	16-1	18-8
	Hem-fir	#1	6-4	9-3	11-9	14-4	16-7	5-10	8-7	10-10	13-3	15-5
	Hem-fir	#2	6-0	8-9	11-1	13-7	15-9	5-7	8-1	10-3	12-7	14-7
	Hem-fir	#3	4-7	6-9	8-6	10-5	12-1	4-3	6-3	7-11	9-7	11-2

(continued)

TABLE R802.5.1(4)
RAFTER SPANS FOR COMMON LUMBER SPECIES
(Ground snow load=50 psf, ceiling not attached to rafters, L/Δ = 180)

RAFTER SPACING (inches)	SPECIES AND GRADE		DEAD LOAD = 10 psf					DEAD LOAD = 20 psf				
			2 × 4	2 × 6	2 × 8	2 × 10	2 × 12	2 × 4	2 × 6	2 × 8	2 × 10	2 × 12
			Maximum rafter spans[a]									
			(feet - inches)	(feet - inches)	(feet - inches)	(feet - inches)	(feet - inches)	(feet - inches)	(feet - inches)	(feet - inches)	(feet - inches)	(feet - inches)
19.2	Southern pine	SS	7-1	11-2	14-8	18-9	22-10	7-1	11-2	14-8	18 7	21-9
	Southern pine	#1	7-0	10-8	13-5	16-0	19-1	6-8	9-11	12-5	14-10	17-8
	Southern pine	#2	6-6	9-4	12-0	14-4	16-10	6-0	8-8	11-2	13-4	15-7
	Southern pine	#3	4-11	7-3	9-2	10-10	12-11	4-6	6-8	8-6	10-1	12-0
	Spruce-pine-fir	SS	6-8	10-6	13-5	16-5	19-1	6-8	9-10	12-5	15-3	17-8
	Spruce-pine-fir	#1	6-1	8-11	11-3	13-9	15-11	5-7	8-3	10-5	12-9	14-9
	Spruce-pine-fir	#2	6-1	8-11	11-3	13-9	15-11	5-7	8-3	10-5	12-9	14-9
	Spruce-pine-fir	#3	4-7	6-9	8-6	10-5	12-1	4-3	6-3	7-11	9-7	11-2
24	Douglas fir-larch	SS	6-8	10-	13-0	15-10	18-4	6-6	9-6	12-0	14-8	17-0
	Douglas fir-larch	#1	5-10	8-6	10-9	13-2	15-3	5-5	7-10	10-0	12-2	14-1
	Douglas fir-larch	#2	5-5	7-11	10-1	12-4	14-3	5-0	7-4	9-4	11-5	13-2
	Douglas fir-larch	#3	4-1	6-0	7-7	9-4	10-9	3-10	5-7	7-1	8-7	10-0
	Hem-fir	SS	6-4	9-11	12-9	15-7	18-0	6-4	9-4	11-9	14-5	16-8
	Hem-fir	#1	5-8	8-3	10-6	12-10	14-10	5-3	7-8	9-9	11-10	13-9
	Hem-fir	#2	5-4	7-10	9-11	12-1	14-1	4-11	7-3	9-2	11-3	13-0
	Hem-fir	#3	4-1	6-0	7-7	9-4	10-9	3-10	5-7	7-1	8-7	10-0
	Southern pine	SS	6-7	10-4	13-8	17-5	21-0	6-7	10-4	13-8	16-7	19-5
	Southern pine	#1	6-5	9-7	12-0	14-4	17-1	6-0	8-10	11-2	13-3	15-9
	Southern pine	#2	5-10	8-4	10-9	12-10	15-1	5-5	7-9	10-0	11-11	13-11
	Southern pine	#3	4-4	6-5	8-3	9-9	11-7	4-1	6-0	7-7	9-0	10-8
	Spruce-pine-fir	SS	6-2	9-6	12-0	14-8	17-1	6-0	8-10	11-2	13-7	15-9
	Spruce-pine-fir	#1	5-5	7-11	10-1	12-4	14-3	5-0	7-4	9-4	11-5	13-2
	Spruce-pine-fir	#2	5-5	7-11	10-1	12-4	14-3	5-0	7-4	9-4	11-5	13-2
	Spruce-pine-fir	#3	4-1	6-0	7-7	9-4	10-9	3-10	5-7	7-1	8-7	10-0

Check sources for availability of lumber in lengths greater than 20 feet.

For SI: 1 inch = 25.4 mm, 1 foot = 304.8 mm, 1 pound per square foot = 0.0479 kPa

a. The tabulated rafter spans assume that ceiling joists are located at the bottom of the attic space or that some other method of resisting the outward push of the rafters on the bearing walls, such as rafter ties, is provided at that location. When ceiling joists or rafter ties are located higher in the attic space, the rafter spans shall be multiplied by the factors given below:

H_C/H_R	Rafter Span Adjustment Factor
1/3	0.67
1/4	0.76
1/5	0.83
1/6	0.90
1/7.5 or less	1.00

where:

H_C = Height of ceiling joists or rafter ties measured vertically above the top of the rafter support walls.

H_R = Height of roof ridge measured vertically above the top of the rafter support walls.

b. Span exceeds 26 feet in length.

TABLE R802.5.1(5)
RAFTER SPANS FOR COMMON LUMBER SPECIES
(Ground snow load=30 psf, ceiling attached to rafters, L/Δ = 240)

RAFTER SPACING (inches)	SPECIES AND GRADE		DEAD LOAD = 10 psf					DEAD LOAD = 20 psf				
			2 × 4	2 × 6	2 × 8	2 × 10	2 × 12	2 × 4	2 × 6	2 × 8	2 × 10	2 × 12
			Maximum rafter spans[a]									
			(feet - inches)	(feet - inches)	(feet - inches)	(feet - inches)	(feet - inches)	(feet - inches)	(feet - inches)	(feet - inches)	(feet - inches)	(feet - inches)
12	Douglas fir-larch	SS	9-1	14-4	18-10	24-1	Note b	9-1	14-4	18-10	24-1	Note b
	Douglas fir-larch	#1	8-9	13-9	18-2	22-9	Note b	8-9	13-2	16-8	20-4	23-7
	Douglas fir-larch	#2	8-7	13-6	17-5	21-4	24-8	8-5	12-4	15-7	19-1	22-1
	Douglas fir-larch	#3	7-1	10-5	13-2	16-1	18-8	6-4	9-4	11-9	14-5	16-8
	Hem-fir	SS	8-7	13-6	17-10	22-9	Note b	8-7	13-6	17-10	22-9	Note b
	Hem-fir	#1	8-5	13-3	17-5	22-2	25-9	8-5	12-10	16-3	19-10	23-0
	Hem-fir	#2	8-0	12-7	16-7	21-0	24-4	8-0	12-2	15-4	18-9	21-9
	Hem-fir	#3	7-1	10-5	13-2	16-1	18-8	6-4	9-4	11-9	14-5	16-8
	Southern pine	SS	8-11	14-1	18-6	23-8	Note b	8-11	14-1	18-6	23-8	Note b
	Southern pine	#1	8-9	13-9	18-2	23-2	Note b	8-9	13-9	18-2	22-2	Note b
	Southern pine	#2	8-7	13-6	17-10	22-3	Note b	8-7	12-11	16-8	19-11	23-4
	Southern pine	#3	7-7	11-2	14-3	16-10	20-0	6-9	10-0	12-9	15-1	17-11
	Spruce-pine-fir	SS	8-5	13-3	17-5	22-3	Note b	8-5	13-3	17-5	22-3	Note b
	Spruce-pine-fir	#1	8-3	12-11	17-0	21-4	24-8	8-3	12-4	15-7	19-1	22-1
	Spruce-pine-fir	#2	8-3	12-11	17-0	21-4	24-8	8-3	12-4	15-7	19-1	22-1
	Spruce-pine-fir	#3	7-1	10-5	13-2	16-1	18-8	6-4	9-4	11-9	14-5	16-8
16	Douglas fir-larch	SS	8-3	13-0	17-2	21-10	Note b	8-3	13-0	17-2	21-3	24-8
	Douglas fir-larch	#1	8-0	12-6	16-2	19-9	22-10	7-10	11-5	14-5	17-8	20-5
	Douglas fir-larch	#2	7-10	11-11	15-1	18-5	21-5	7-3	10-8	13-6	16-6	19-2
	Douglas fir-larch	#3	6-2	9-0	11-5	13-11	16-2	5-6	8-1	10-3	12-6	14-6
	Hem-fir	SS	7-10	12-3	16-2	20-8	25-1	7-10	12-3	16-2	20-8	24-2
	Hem-fir	#1	7-8	12-0	15-9	19-3	22-3	7-7	11-1	14-1	17-2	19-11
	Hem-fir	#2	7-3	11-5	14-11	18-2	21-1	7-2	10-6	13-4	16-3	18-10
	Hem-fir	#3	6-2	9-0	11-5	13-11	16-2	5-6	8-1	10-3	12-6	14-6
	Southern pine	SS	8-1	12-9	16-10	21-6	Note b	8-1	12-9	16-10	21-6	Note b
	Southern pine	#1	8-0	12-6	16-6	21-1	25-7	8-0	12-6	16-2	19-2	22-10
	Southern pine	#2	7-10	12-3	16-2	19-3	22-7	7-10	11-2	14-5	17-3	20-2
	Southern pine	#3	6-7	9-8	12-4	14-7	17-4	5-10	8-8	11-0	13-0	15-6
	Spruce-pine-fir	SS	7-8	12-0	15-10	20-2	24-7	7-8	12-0	15-10	19-9	22-10
	Spruce-pine-fir	#1	7-6	11-9	15-1	18-5	21-5	7-3	10-8	13-6	16-6	19-2
	Spruce-pine-fir	#2	7-6	11-9	15-1	18-5	21-5	7-3	10-8	13-6	16-6	19-2
	Spruce-pine-fir	#3	6-2	9-0	11-5	13-11	16-2	5-6	8-1	10-3	12-6	14-6
19.2	Douglas fir-larch	SS	7-9	12-3	16-1	20-7	25-0	7-9	12-3	15-10	19-5	22-6
	Douglas fir-larch	#1	7-6	11-8	14-9	18-0	20-11	7-1	10-5	13-2	16-1	18-8
	Douglas fir-larch	#2	7-4	10-11	13-9	16-10	19-6	6-8	9-9	12-4	15-1	17-6
	Douglas fir-larch	#3	5-7	8-3	10-5	12-9	14-9	5-0	7-4	9-4	11-5	13-2
	Hem-fir	SS	7-4	11-7	15-3	19-5	23-7	7-4	11-7	15-3	19-1	22-1
	Hem-fir	#1	7-2	11-4	14-4	17-7	20-4	6-11	10-2	12-10	15-8	18-2
	Hem-fir	#2	6-10	10-9	13-7	16-7	19-3	6-7	9-7	12-2	14-10	17-3
	Hem-fir	#3	5-7	8-3	10-5	12-9	14-9	5-0	7-4	9-4	11-5	13-2

(continued)

TABLE R802.5.1(5)—continued
RAFTER SPANS FOR COMMON LUMBER SPECIES
(Ground snow load=30 psf, ceiling attached to rafters, L/Δ = 240)

RAFTER SPACING (inches)	SPECIES AND GRADE		DEAD LOAD = 10 psf					DEAD LOAD = 20 psf				
			2 × 4	2 × 6	2 × 8	2 × 10	2 × 12	2 × 4	2 × 6	2 × 8	2 × 10	2 × 12
			Maximum rafter spans[a]									
			(feet - inches)	(feet - inches)	(feet - inches)	(feet - inches)	(feet - inches)	(feet - inches)	(feet - inches)	(feet - inches)	(feet - inches)	(feet - inches)
19.2	Southern pine	SS	7-8	12-0	15-10	20-2	24-7	7-8	12-0	15-10	20-2	24-7
	Southern pine	#1	7-6	11-9	15-6	19-7	23-4	7-6	11-9	14-9	17-6	20-11
	Southern pine	#2	7-4	11-5	14-9	17-7	20-7	7-1	10-2	13-2	15-9	18-5
	Southern pine	#3	6-0	8-10	11-3	13-4	15-10	5-4	7-11	10-1	11-11	14-2
	Spruce-pine-fir	SS	7-2	11-4	14-11	19-0	23-1	7-2	11-4	14-9	18-0	20-11
	Spruce-pine-fir	#1	7-0	10-11	13-9	16-10	19-6	6-8	9-9	12-4	15-1	17-6
	Spruce-pine-fir	#2	7-0	10-11	13-9	16-10	19-6	6-8	9-9	12-4	15-1	17-6
	Spruce-pine-fir	#3	5-7	8-3	10-5	12-9	14-9	5-0	7-4	9-4	11-5	13-2
24	Douglas fir-larch	SS	7-3	11-4	15-0	19-1	22-6	7-3	11-3	14-2	17-4	20-1
	Douglas fir-larch	#1	7-0	10-5	13-2	16-1	18-8	6-4	9-4	11-9	14-5	16-8
	Douglas fir-larch	#2	6-8	9-9	12-4	15-1	17-6	5-11	8-8	11-0	13-6	15-7
	Douglas fir-larch	#3	5-0	7-4	9-4	11-5	13-2	4-6	6-7	8-4	10-2	11-10
	Hem-fir	SS	6-10	10-9	14-2	18-0	21-11	6-10	10-9	13-11	17-0	19-9
	Hem-fir	#1	6-8	10-2	12-10	15-8	18-2	6-2	9-1	11-6	14-0	16-3
	Hem-fir	#2	6-4	9-7	12-2	14-10	17-3	5-10	8-7	10-10	13-3	15-5
	Hem-fir	#3	5-0	7-4	9-4	11-5	13-2	4-6	6-7	8-4	10-2	11-10
	Southern pine	SS	7-1	11-2	14-8	18-9	22-10	7-1	11-2	14-8	18-9	22-10
	Southern pine	#1	7-0	10-11	14-5	17-6	20-11	7-0	10-6	13-2	15-8	18-8
	Southern pine	#2	6-10	10-2	13-2	15-9	18-5	6-4	9-2	11-9	14-1	16-6
	Southern pine	#3	5-4	7-11	10-1	11-11	14-2	4-9	7-1	9-0	10-8	12-8
	Spruce-pine-fir	SS	6-8	10-6	13-10	17-8	20-11	6-8	10-5	13-2	16-1	18-8
	Spruce-pine-fir	#1	6-6	9-9	12-4	15-1	17-6	5-11	8-8	11-0	13-6	15-7
	Spruce-pine-fir	#2	6-6	9-9	12-4	15-1	17-6	5-11	8-8	11-0	13-6	15-7
	Spruce-pine-fir	#3	5-0	7-4	9-4	11-5	13-2	4-6	6-7	8-4	10-2	11-10

Check sources for availability of lumber in lengths greater than 20 feet.

For SI: 1 inch = 25.4 mm, 1 foot = 304.8 mm, 1 pound per square foot = 0.0479 kPa.

a. The tabulated rafter spans assume that ceiling joists are located at the bottom of the attic space or that some other method of resisting the outward push of the rafters on the bearing walls, such as rafter ties, is provided at that location. When ceiling joists or rafter ties are located higher in the attic space, the rafter spans shall be multiplied by the factors given below:

H_C/H_R	Rafter Span Adjustment Factor
1/3	0.67
1/4	0.76
1/5	0.83
1/6	0.90
1/7.5 or less	1.00

where:

H_C = Height of ceiling joists or rafter ties measured vertically above the top of the rafter support walls.

H_R = Height of roof ridge measured vertically above the top of the rafter support walls.

b. Span exceeds 26 feet in length.

TABLE R802.5.1(6)
RAFTER SPANS FOR COMMON LUMBER SPECIES
(Ground snow load=50 psf, ceiling attached to rafters, L/Δ = 240)

RAFTER SPACING (inches)	SPECIES AND GRADE		DEAD LOAD = 10 psf					DEAD LOAD = 20 psf				
			2 × 4	2 × 6	2 × 8	2 × 10	2 × 12	2 × 4	2 × 6	2 × 8	2 × 10	2 × 12
			Maximum rafter spans[a]									
			(feet-inches)	(feet-inches)	(feet-inches)	(feet-inches)	(feet-inches)	(feet-inches)	(feet-inches)	(feet-inches)	(feet-inches)	(feet-inches)
12	Douglas fir-larch	SS	7-8	12-1	15-11	20-3	24-8	7-8	12-1	15-11	20-3	24-0
	Douglas fir-larch	#1	7-5	11-7	15-3	18-7	21-7	7-5	11-2	14-1	17-3	20-0
	Douglas fir-larch	#2	7-3	11-3	14-3	17-5	20-2	7-1	10-5	13-2	16-1	18-8
	Douglas fir-larch	#3	5-10	8-6	10-9	13-2	15-3	5-5	7-10	10-0	12-2	14-1
	Hem-fir	SS	7-3	11-5	15-0	19-2	23-4	7-3	11-5	15-0	19-2	23-4
	Hem-fir	#1	7-1	11-2	14-8	18-1	21-0	7-1	10-10	13-9	16-9	19-5
	Hem-fir	#2	6-9	10-8	14-0	17-2	19-11	6-9	10-3	13-0	15-10	18-5
	Hem-fir	#3	5-10	8-6	10-9	13-2	15-3	5-5	7-10	10-0	12-2	14-1
	Southern pine	SS	7-6	11-10	15-7	19-11	24-3	7-6	11-10	15-7	19-11	24-3
	Southern pine	#1	7-5	11-7	15-4	19-7	23-9	7-5	11-7	15-4	18-9	22-4
	Southern pine	#2	7-3	11-5	15-0	18-2	21-3	7-3	10-11	14-1	16-10	19-9
	Southern pine	#3	6-2	9-2	11-8	13-9	16-4	5-9	8-5	10-9	12-9	15-2
	Spruce-pine-fir	SS	7-1	11-2	14-8	18-9	22-10	7-1	11-2	14-8	18-9	22-4
	Spruce-pine-fir	#1	6-11	10-11	14-3	17-5	20-2	6-11	10-5	13-2	16-1	18-8
	Spruce-pine-fir	#2	6-11	10-11	14-3	17-5	20-2	6-11	10-5	13-2	16-1	18-8
	Spruce-pine-fir	#3	5-10	8-6	10-9	13-2	15-3	5-5	7-10	10-0	12-2	14-1
16	Douglas fir-larch	SS	7-0	11-0	14-5	18-5	22-5	7-0	11-0	14-5	17-11	20-10
	Douglas fir-larch	#1	6-9	10-5	13-2	16-1	18-8	6-7	9-8	12-2	14-11	17-3
	Douglas fir-larch	#2	6-7	9-9	12-4	15-1	17-6	6-2	9-0	11-5	13-11	16-2
	Douglas fir-larch	#3	5-0	7-4	9-4	11-5	13-2	4-8	6-10	8-8	10-6	12-3
	Hem-fir	SS	6-7	10-4	13-8	17-5	21-2	6-7	10-4	13-8	17-5	20-5
	Hem-fir	#1	6-5	10-2	12-10	15-8	18-2	6-5	9-5	11-11	14-6	16-10
	Hem-fir	#2	6-2	9-7	12-2	14-10	17-3	6-1	8-11	11-3	13-9	15-11
	Hem-fir	#3	5-0	7-4	9-4	11-5	13-2	4-8	6-10	8-8	10-6	12-3
	Southern pine	SS	6-10	10-9	14-2	18-1	22-0	6-10	10-9	14-2	18-1	22-0
	Southern pine	#1	6-9	10-7	13-11	17-6	20-11	6-9	10-7	13-8	16-2	19-4
	Southern pine	#2	6-7	10-2	13-2	15-9	18-5	6-7	9-5	12-2	14-7	17-1
	Southern pine	#3	5-4	7-11	10-1	11-11	14-2	4-11	7-4	9-4	11-0	13-1
	Spruce-pine-fir	SS	6-5	10-2	13-4	17-0	20-9	6-5	10-2	13-4	16-8	19-4
	Spruce-pine-fir	#1	6-4	9-9	12-4	15-1	17-6	6-2	9-0	11-5	13-11	16-2
	Spruce-pine-fir	#2	6-4	9-9	12-4	15-1	17-6	6-2	9-0	11-5	13-11	16-2
	Spruce-pine-fir	#3	5-0	7-4	9-4	11-5	13-2	4-8	6-10	8-8	10-6	12-3
19.2	Douglas fir-larch	SS	6-7	10-4	13-7	17-4	20-6	6-7	10-4	13-5	16-5	19-0
	Douglas fir-larch	#1	6-4	9-6	12-0	14-8	17-1	6-0	8-10	11-2	13-7	15-9
	Douglas fir-larch	#2	6-1	8-11	11-3	13-9	15-11	5-7	8-3	10-5	12-9	14-9
	Douglas fir-larch	#3	4-7	6-9	8-6	10-5	12-1	4-3	6-3	7-11	9-7	11-2
	Hem-fir	SS	6-2	9-9	12-10	16-5	19-11	6-2	9-9	12-10	16-1	18-8
	Hem-fir	#1	6-1	9-3	11-9	14-4	16-7	5-10	8-7	10-10	13-3	15-5
	Hem-fir	#2	5-9	8-9	11-1	13-7	15-9	5-7	8-1	10-3	12-7	14-7
	Hem-fir	#3	4-7	6-9	8-6	10-5	12-1	4-3	6-3	7-11	9-7	11-2

(continued)

TABLE R802.5.1(6)—continued
RAFTER SPANS FOR COMMON LUMBER SPECIES
(Ground snow load=50 psf, ceiling attached to rafters, L/Δ = 240)

RAFTER SPACING (inches)	SPECIES AND GRADE		DEAD LOAD = 10 psf					DEAD LOAD = 20 psf				
			2 × 4	2 × 6	2 × 8	2 × 10	2 × 12	2 × 4	2 × 6	2 × 8	2 × 10	2 × 12
			Maximum rafter spans[a]									
			(feet-inches)	(feet-inches)	(feet-inches)	(feet-inches)	(feet-inches)	(feet-inches)	(feet-inches)	(feet-inches)	(feet-inches)	(feet-inches)
19.2	Southern pine	SS	6-5	10-2	13-4	17-0	20-9	6-5	10-2	13-4	17-0	20-9
	Southern pine	#1	6-4	9-11	13-1	16-0	19-1	6-4	9-11	12-5	14-10	17-8
	Southern pine	#2	6-2	9-4	12-0	14-4	16-10	6-0	8-8	11-2	13-4	15-7
	Southern pine	#3	4-11	7-3	9-2	10-10	12-11	4-6	6-8	8-6	10-1	12-0
	Spruce-pine-fir	SS	6-1	9-6	12-7	16-0	19-1	6-1	9-6	12-5	15-3	17-8
	Spruce-pine-fir	#1	5-11	8-11	11-3	13-9	15-11	5-7	8-3	10-5	12-9	14-9
	Spruce-pine-fir	#2	5-11	8-11	11-3	13-9	15-11	5-7	8-3	10-5	12-9	14-9
	Spruce-pine-fir	#3	4-7	6-9	8-6	10-5	12-1	4-3	6-3	7-11	9-7	11-2
24	Douglas fir-larch	SS	6-1	9-7	12-7	15-10	18-4	6-1	9-6	12-0	14-8	17-0
	Douglas fir-larch	#1	5-10	8-6	10-9	13-2	15-3	5-5	7-10	10-0	12-2	14-1
	Douglas fir-larch	#2	5-5	7-11	10-1	12-4	14-3	5-0	7-4	9-4	11-5	13-2
	Douglas fir-larch	#3	4-1	6-0	7-7	9-4	10-9	3-10	5-7	7-1	8-7	10-0
	Hem-fir	SS	5-9	9-1	11-11	15-2	18-0	5-9	9-1	11-9	14-5	15-11
	Hem-fir	#1	5-8	8-3	10-6	12-10	14-10	5-3	7-8	9-9	11-10	13-9
	Hem-fir	#2	5-4	7-10	9-11	12-1	14-1	4-11	7-3	9-2	11-3	13-0
	Hem-fir	#3	4-1	6-0	7-7	9-4	10-9	3-10	5-7	7-1	8-7	10-0
	Southern pine	SS	6-0	9-5	12-5	15-10	19-3	6-0	9-5	12-5	15-10	19-3
	Southern pine	#1	5-10	9-3	12-0	14-4	17-1	5-10	8-10	11-2	13-3	15-9
	Southern pine	#2	5-9	8-4	10-9	12-10	15-1	5-5	7-9	10-0	11-11	13-11
	Southern pine	#3	4-4	6-5	8-3	9-9	11-7	4-1	6-0	7-7	9-0	10-8
	Spruce-pine-fir	SS	5-8	8-10	11-8	14-8	17-1	5-8	8-10	11-2	13-7	15-9
	Spruce-pine-fir	#1	5-5	7-11	10-1	12-4	14-3	5-0	7-4	9-4	11-5	13-2
	Spruce-pine-fir	#2	5-5	7-11	10-1	12-4	14-3	5-0	7-4	9-4	11-5	13-2
	Spruce-pine-fir	#3	4-1	6-0	7-7	9-4	10-9	3-10	5-7	7-1	8-7	10-0

Check sources for availability of lumber in lengths greater than 20 feet.

For SI: 1 inch = 25.4 mm, 1 foot = 304.8 mm, 1 pound per square foot = 0.0479 kPa.

a. The tabulated rafter spans assume that ceiling joists are located at the bottom of the attic space or that some other method of resisting the outward push of the rafters on the bearing walls, such as rafter ties, is provided at that location. When ceiling joists or rafter ties are located higher in the attic space, the rafter spans shall be multiplied by the factors given below:

H_C/H_R	Rafter Span Adjustment Factor
1/3	0.67
1/4	0.76
1/5	0.83
1/6	0.90
1/7.5 or less	1.00

where:

H_C = Height of ceiling joists or rafter ties measured vertically above the top of the rafter support walls.

H_R = Height of roof ridge measured vertically above the top of the rafter support walls.

TABLE R802.5.1(7)
RAFTER SPANS FOR 70 PSF GROUND SNOW LOAD
(Ceiling not attached to rafters, L/Δ = 180)

RAFTER SPACING (inches)	SPECIES AND GRADE		DEAD LOAD = 10 psf					DEAD LOAD = 20 psf				
			2 × 4	2 × 6	2 × 8	2 × 10	2 × 12	2 × 4	2 × 6	2 × 8	2 × 10	2 × 12
			Maximum Rafter Spans[a]									
			(feet-inches)	(feet-inches)	(feet-inches)	(feet-inches)	(feet-inches)	(feet-inches)	(feet-inches)	(feet-inches)	(feet-inches)	(feet-inches)
12	Douglas fir-larch	SS	7-7	11-10	15-8	19-5	22-6	7-7	11-10	15-0	18-3	21-2
	Douglas fir-larch	#1	7-1	10-5	13-2	16-1	18-8	6-8	9-10	12-5	15-2	17-7
	Douglas fir-larch	#2	6-8	9-9	12-4	15-1	17-6	6-3	9-2	11-8	14-2	16-6
	Douglas fir-larch	#3	5-0	7-4	9-4	11-5	13-2	4-9	6-11	8-9	10-9	12-5
	Hem-fir	SS	7-2	11-3	14-9	18-10	22-1	7-2	11-3	14-8	18-0	20-10
	Hem-fir	#1	6-11	10-2	12-10	15-8	18-2	6-6	9-7	12-1	14-10	17-2
	Hem-fir	#2	6-7	9-7	12-2	14-10	17-3	6-2	9-1	11-5	14-0	16-3
	Hem-fir	#3	5-0	7-4	9-4	11-5	13-2	4-9	6-11	8-9	10-9	12-5
	Southern pine	SS	7-5	11-8	15-4	19-7	23-10	7-5	11-8	15-4	19-7	23-10
	Southern pine	#1	7-3	11-5	14-9	17-6	20-11	7-3	11-1	13-11	16-6	19-8
	Southern pine	#2	7-1	10-2	13-2	15-9	18-5	6-8	9-7	12-5	14-10	17-5
	Southern pine	#3	5-4	7-11	10-1	11-11	14-2	5-1	7-5	9-6	11-3	13-4
	Spruce-pine-fir	SS	7-0	11-0	14-6	18-0	20-11	7-0	11-0	13-11	17-0	19-8
	Spruce-pine-fir	#1	6-8	9-9	12-4	15-1	17-6	6-3	9-2	11-8	14-2	16-6
	Spruce-pine-fir	#2	6-8	9-9	12-4	15-1	17-6	6-3	9-2	11-8	14-2	16-6
	Spruce-pine-fir	#3	5-0	7-4	9-4	11-5	13-2	4-9	6-11	8-9	10-9	12-5
16	Douglas fir-larch	SS	6-10	10-9	13-9	16-10	19-6	6-10	10-3	13-0	15-10	18-4
	Douglas fir-larch	#1	6-2	9-0	11-5	13-11	16-2	5-10	8-6	10-9	13-2	15-3
	Douglas fir-larch	#2	5-9	8-5	10-8	13-1	15-2	5-5	7-11	10-1	12-4	14-3
	Douglas fir-larch	#3	4-4	6-4	8-1	9-10	11-5	4-1	6-0	7-7	9-4	10-9
	Hem-fir	SS	6-6	10-2	13-5	16-6	19-2	6-6	10-1	12-9	15-7	18-0
	Hem-fir	#1	6-0	8-9	11-2	13-7	15-9	5-8	8-3	10-6	12-10	14-10
	Hem-fir	#2	5-8	8-4	10-6	12-10	14-11	5-4	7-10	9-11	12-1	14-1
	Hem-fir	#3	4-4	6-4	8-1	9-10	11-5	4-1	6-0	7-7	9-4	10-9
	Southern pine	SS	6-9	10-7	14-0	17-10	21-8	6-9	10-7	14-0	17-10	21-0
	Southern pine	#1	6-7	10-2	12-9	15-2	18-1	6-5	9-7	12-0	14-4	17-1
	Southern pine	#2	6-2	8-10	11-5	13-7	16-0	5-10	8-4	10-9	12-10	15-1
	Southern pine	#3	4-8	6-10	8-9	10-4	12-3	4-4	6-5	8-3	9-9	11-7
	Spruce-pine-fir	SS	6-4	10-0	12-9	15-7	18-1	6-4	9-6	12-0	14-8	17-1
	Spruce-pine-fir	#1	5-9	8-5	10-8	13-1	15-2	5-5	7-11	10-1	12-4	14-3
	Spruce-pine-fir	#2	5-9	8-5	10-8	13-1	15-2	5-5	7-11	10-1	12-4	14-3
	Spruce-pine-fir	#3	4-4	6-4	8-1	9-10	11-5	4-1	6-0	7-7	9-4	10-9
19.2	Douglas fir-larch	SS	6-5	9-11	12-7	15-4	17-9	6-5	9-4	11-10	14-5	16-9
	Douglas fir-larch	#1	5-7	8-3	10-5	12-9	14-9	5-4	7-9	9-10	12-0	13-11
	Douglas fir-larch	#2	5-3	7-8	9-9	11-11	13-10	5-0	7-3	9-2	11-3	13-0
	Douglas fir-larch	#3	4-0	5-10	7-4	9-0	10-5	3-9	5-6	6-11	8-6	9-10
	Hem-fir	SS	6-1	9-7	12-4	15-1	17-4	6-1	9-2	11-8	14-2	15-5
	Hem-fir	#1	5-6	8-0	10-2	12-5	14-5	5-2	7-7	9-7	11-8	13-7
	Hem-fir	#2	5-2	7-7	9-7	11-9	13-7	4-11	7-2	9-1	11-1	12-10
	Hem-fir	#3	4-0	5-10	7-4	9-0	10-5	3-9	5-6	6-11	8-6	9-10

(continued)

TABLE R802.5.1(7)—continued
RAFTER SPANS FOR 70 PSF GROUND SNOW LOAD
(Ceiling not attached to rafters, L/Δ = 180)

RAFTER SPACING (inches)	SPECIES AND GRADE		DEAD LOAD = 10 psf					DEAD LOAD = 20 psf				
			2 × 4	2 × 6	2 × 8	2 × 10	2 × 12	2 × 4	2 × 6	2 × 8	2 × 10	2 × 12
			Maximum Rafter Spans[a]									
			(feet-inches)	(feet-inches)	(feet-inches)	(feet-inches)	(feet-inches)	(feet-inches)	(feet-inches)	(feet-inches)	(feet-inches)	(feet-inches)
19.2	Southern pine	SS	6-4	10-0	13-2	16-9	20-4	6-4	10-0	13-2	16-5	19-2
	Southern pine	#1	6-3	9-3	11-8	13-10	16-6	5-11	8-9	11-0	13-1	15-7
	Southern pine	#2	5-7	8-1	10-5	12-5	14-7	5-4	7-7	9-10	11-9	13-9
	Southern pine	#3	4-3	6-3	8-0	9-5	11-2	4-0	5-11	7-6	8-10	10-7
	Spruce-pine-fir	SS	6-0	9-2	11-8	14-3	16-6	5-11	8-8	11-0	13-5	15-7
	Spruce-pine-fir	#1	5-3	7-8	9-9	11-11	13-10	5-0	7-3	9-2	11-3	13-0
	Spruce-pine-fir	#2	5-3	7-8	9-9	11-11	13-10	5-0	7-3	9-2	11-3	13-0
	Spruce-pine-fir	#3	4-0	5-10	7-4	9-0	10-5	3-9	5-6	6-11	8-6	9-10
24	Douglas fir-larch	SS	6-0	8-10	11-3	13-9	15-11	5-9	8-4	10-7	12-11	15-0
	Douglas fir-larch	#1	5-0	7-4	9-4	11-5	13-2	4-9	6-11	8-9	10-9	12-5
	Douglas fir-larch	#2	4-8	6-11	8-9	10-8	12-4	4-5	6-6	8-3	10-0	11-8
	Douglas fir-larch	#3	3-7	5-2	6-7	8-1	9-4	3-4	4-11	6-3	7-7	8-10
	Hem-fir	SS	5-8	8-8	11-0	13-6	13-11	5-7	8-3	10-5	12-4	12-4
	Hem-fir	#1	4-11	7-2	9-1	11-1	12-10	4-7	6-9	8-7	10-6	12-2
	Hem-fir	#2	4-8	6-9	8-7	10-6	12-2	4-4	6-5	8-1	9-11	11-6
	Hem-fir	#3	3-7	5-2	6-7	8-1	9-4	3-4	4-11	6-3	7-7	8-10
	Southern pine	SS	5-11	9-3	12-2	15-7	18-2	5-11	9-3	12-2	14-8	17-2
	Southern pine	#1	5-7	8-3	10-5	12-5	14-9	5-3	7-10	9-10	11-8	13-11
	Southern pine	#2	5-0	7-3	9-4	11-1	13-0	4-9	6-10	8-9	10-6	12-4
	Southern pine	#3	3-9	5-7	7-1	8-5	10-0	3-7	5-3	6-9	7-11	9-5
	Spruce-pine-fir	SS	5-6	8-3	10-5	12-9	14-9	5-4	7-9	9-10	12-0	12-11
	Spruce-pine-fir	#1	4-8	6-11	8-9	10-8	12-4	4-5	6-6	8-3	10-0	11-8
	Spruce-pine-fir	#2	4-8	6-11	8-9	10-8	12-4	4-5	6-6	8-3	10-0	11-8
	Spruce-pine-fir	#3	3-7	5-2	6-7	8-1	9-4	3-4	4-11	6-3	7-7	8-10

Check sources for availability of lumber in lengths greater than 20 feet.

For SI: 1 inch = 25.4 mm, 1 foot = 304.8 mm, 1 pound per square foot = 0.0479 kPa.

a. The tabulated rafter spans assume that ceiling joists are located at the bottom of the attic space or that some other method of resisting the outward push of the rafters on the bearing walls, such as rafter ties, is provided at that location. When ceiling joists or rafter ties are located higher in the attic space, the rafter spans shall be multiplied by the factors given below:

H_C/H_R	Rafter Span Adjustment Factor
1/3	0.67
1/4	0.76
1/5	0.83
1/6	0.90
1/7.5 or less	1.00

where:

H_C = Height of ceiling joists or rafter ties measured vertically above the top of the rafter support walls.

H_R = Height of roof ridge measured vertically above the top of the rafter support walls.

TABLE R802.5.1(8)
RAFTER SPANS FOR 70 PSF GROUND SNOW LOAD
(Ceiling attached to rafters, L/Δ = 240)

RAFTER SPACING (inches)	SPECIES AND GRADE		DEAD LOAD = 10 psf					DEAD LOAD = 20 psf				
			2 × 4	2 × 6	2 × 8	2 × 10	2 × 12	2 × 4	2 × 6	2 × 8	2 × 10	2 × 12
			Maximum rafter spans[a]									
			(feet - inches)	(feet - inches)	(feet - inches)	(feet - inches)	(feet - inches)	(feet - inches)	(feet - inches)	(feet - inches)	(feet - inches)	(feet - inches)
12	Douglas fir-larch	SS	6-10	10-9	14-3	18-2	22-1	6-10	10-9	14-3	18-2	21-2
	Douglas fir-larch	#1	6-7	10-5	13-2	16-1	18-8	6-7	9-10	12-5	15-2	17-7
	Douglas fir-larch	#2	6-6	9-9	12-4	15-1	17-6	6-3	9-2	11-8	14-2	16-6
	Douglas fir-larch	#3	5-0	7-4	9-4	11-5	13-2	4-9	6-11	8-9	10-9	12-5
	Hem-fir	SS	6-6	10-2	13-5	17-2	20-10	6-6	10-2	13-5	17-2	20-10
	Hem-fir	#1	6-4	10-0	12-10	15-8	18-2	6-4	9-7	12-1	14-10	17-2
	Hem-fir	#2	6-1	9-6	12-2	14-10	17-3	6-1	9-1	11-5	14-0	16-3
	Hem-fir	#3	5-0	7-4	9-4	11-5	13-2	4-9	6-11	8-9	10-9	12-5
	Southern pine	SS	6-9	10-7	14-0	17-10	21-8	6-9	10-7	14-0	17-10	21-8
	Southern pine	#1	6-7	10-5	13-8	17-6	20-11	6-7	10-5	13-8	16-6	19-8
	Southern pine	#2	6-6	10-2	13-2	15-9	18-5	6-6	9-7	12-5	14-10	17-5
	Southern pine	#3	5-4	7-11	10-1	11-11	14-2	5-1	7-5	9-6	11-3	13-4
	Spruce-pine-fir	SS	6-4	10-0	13-2	16-9	20-5	6-4	10-0	13-2	16-9	19-8
	Spruce-pine-fir	#1	6-2	9-9	12-4	15-1	17-6	6-2	9-2	11-8	14-2	16-6
	Spruce-pine-fir	#2	6-2	9-9	12-4	15-1	17-6	6-2	9-2	11-8	14-2	16-6
	Spruce-pine-fir	#3	5-0	7-4	9-4	11-5	13-2	4-9	6-11	8-9	10-9	12-5
16	Douglas fir-larch	SS	6-3	9-10	12-11	16-6	19-6	6-3	9-10	12-11	15-10	18-4
	Douglas fir-larch	#1	6-0	9-0	11-5	13-11	16-2	5-10	8-6	10-9	13-2	15-3
	Douglas fir-larch	#2	5-9	8-5	10-8	13-1	15-2	5-5	7-11	10-1	12-4	14-3
	Douglas fir-larch	#3	4-4	6-4	8-1	9-10	11-5	4-1	6-0	7-7	9-4	10-9
	Hem-fir	SS	5-11	9-3	12-2	15-7	18-11	5-11	9-3	12-2	15-7	18-0
	Hem-fir	#1	5-9	8-9	11-2	13-7	15-9	5-8	8-3	10-6	12-10	14-10
	Hem-fir	#2	5-6	8-4	10-6	12-10	14-11	5-4	7-10	9-11	12-1	14-1
	Hem-fir	#3	4-4	6-4	8-1	9-10	11-5	4-1	6-0	7-7	9-4	10-9
	Southern pine	SS	6-1	9-7	12-8	16-2	19-8	6-1	9-7	12-8	16-2	19-8
	Southern pine	#1	6-0	9-5	12-5	15-2	18-1	6-0	9-5	12-0	14-4	17-1
	Southern pine	#2	5-11	8-10	11-5	13-7	16-0	5-10	8-4	10-9	12-10	15-1
	Southern pine	#3	4-8	6-10	8-9	10-4	12-3	4-4	6-5	8-3	9-9	11-7
	Spruce-pine-fir	SS	5-9	9-1	11-11	15-3	18-1	5-9	9-1	11-11	14-8	17-1
	Spruce-pine-fir	#1	5-8	8-5	10-8	13-1	15-2	5-5	7-11	10-1	12-4	14-3
	Spruce-pine-fir	#2	5-8	8-5	10-8	13-1	15-2	5-5	7-11	10-1	12-4	14-3
	Spruce-pine-fir	#3	4-4	6-4	8-1	9-10	11-5	4-1	6-0	7-7	9-4	10-9
19.2	Douglas fir-larch	SS	5-10	9-3	12-2	15-4	17-9	5-10	9-3	11-10	14-5	16-9
	Douglas fir-larch	#1	5-7	8-3	10-5	12-9	14-9	5-4	7-9	9-10	12-0	13-11
	Douglas fir-larch	#2	5-3	7-8	9-9	11-11	13-10	5-0	7-3	9-2	11-3	13-0
	Douglas fir-larch	#3	4-0	5-10	7-4	9-0	10-5	3-9	5-6	6-11	8-6	9-10
	Hem-fir	SS	5-6	8-8	11-6	14-8	17-4	5-6	8-8	11-6	14-2	15-5
	Hem-fir	#1	5-5	8-0	10-2	12-5	14-5	5-2	7-7	9-7	11-8	13-7
	Hem-fir	#2	5-2	7-7	9-7	11-9	13-7	4-11	7-2	9-1	11-1	12-10
	Hem-fir	#3	4-0	5-10	7-4	9-0	10-5	3-9	5-6	6-11	8-6	9-10

(continued)

TABLE R802.5.1(8)—continued
RAFTER SPANS FOR 70 PSF GROUND SNOW LOAD
(Ceiling attached to rafters, L/Δ = 240)

RAFTER SPACING (inches)	SPECIES AND GRADE		DEAD LOAD = 10 psf					DEAD LOAD = 20 psf				
			2 × 4	2 × 6	2 × 8	2 × 10	2 × 12	2 × 4	2 × 6	2 × 8	2 × 10	2 × 12
			Maximum rafter spans[a]									
			(feet - inches)	(feet - inches)	(feet - inches)	(feet - inches)	(feet - inches)	(feet - inches)	(feet - inches)	(feet - inches)	(feet - inches)	(feet - inches)
19.2	Southern pine	SS	5-9	9-1	11-11	15-3	18-6	5-9	9-1	11-11	15-3	18-6
	Southern pine	#1	5-8	8-11	11-8	13-10	16-6	5-8	8-9	11-0	13-1	15-7
	Southern pine	#2	5-6	8-1	10-5	12-5	14-7	5-4	7-7	9-10	11-9	13-9
	Southern pine	#3	4-3	6-3	8-0	9-5	11-2	4-0	5-11	7-6	8-10	10-7
	Spruce-pine-fir	SS	5-5	8-6	11-3	14-3	16-6	5-5	8-6	11-0	13-5	15-7
	Spruce-pine-fir	#1	5-3	7-8	9-9	11-11	13-10	5-0	7-3	9-2	11-3	13-0
	Spruce-pine-fir	#2	5-3	7-8	9-9	11-11	13-10	5-0	7-3	9-2	11-3	13-0
	Spruce-pine-fir	#3	4-0	5-10	7-4	9-0	10-5	3-9	5-6	6-11	8-6	9-10
24	Douglas fir-larch	SS	5-5	8-7	11-3	13-9	15-11	5-5	8-4	10-7	12-11	15-0
	Douglas fir-larch	#1	5-0	7-4	9-4	11-5	13-2	4-9	6-11	8-9	10-9	12-5
	Douglas fir-larch	#2	4-8	6-11	8-9	10-8	12-4	4-5	6-6	8-3	10-0	11-8
	Douglas fir-larch	#3	3-7	5-2	6-7	8-1	9-4	3-4	4-11	6-3	7-7	8-10
	Hem-fir	SS	5-2	8-1	10-8	13-6	13-11	5-2	8-1	10-5	12-4	12-4
	Hem-fir	#1	4-11	7-2	9-1	11-1	12-10	4-7	6-9	8-7	10-6	12-2
	Hem-fir	#2	4-8	6-9	8-7	10-6	12-2	4-4	6-5	8-1	9-11	11-6
	Hem-fir	#3	3-7	5-2	6-7	8-1	9-4	3-4	4-11	6-3	7-7	8-10
	Southern pine	SS	5-4	8-5	11-1	14-2	17-2	5-4	8-5	11-1	14-2	17-2
	Southern pine	#1	5-3	8-3	10-5	12-5	14-9	5-3	7-10	9-10	11-8	13-11
	Southern pine	#2	5-0	7-3	9-4	11-1	13-0	4-9	6-10	8-9	10-6	12-4
	Southern pine	#3	3-9	5-7	7-1	8-5	10-0	3-7	5-3	6-9	7-11	9-5
	Spruce-pine-fir	SS	5-0	7-11	10-5	12-9	14-9	5-0	7-9	9-10	12-0	12-11
	Spruce-pine-fir	#1	4-8	6-11	8-9	10-8	12-4	4-5	6-6	8-3	10-0	11-8
	Spruce-pine-fir	#2	4-8	6-11	8-9	10-8	12-4	4-5	6-6	8-3	10-0	11-8
	Spruce-pine-fir	#3	3-7	5-2	6-7	8-1	9-4	3-4	4-11	6-3	7-7	8-10

Check sources for availability of lumber in lengths greater than 20 feet.

For SI: 1 inch = 25.4 mm, 1 foot = 304.8 mm, 1 pound per square foot = 0.0479 kPa.

a. The tabulated rafter spans assume that ceiling joists are located at the bottom of the attic space or that some other method of resisting the outward push of the rafters on the bearing walls, such as rafter ties, is provided at that location. When ceiling joists or rafter ties are located higher in the attic space, the rafter spans shall be multiplied by the factors given below:

H_C/H_R	Rafter Span Adjustment Factor
1/3	0.67
1/4	0.76
1/5	0.83
1/6	0.90
1/7.5 or less	1.00

where:

H_C = Height of ceiling joists or rafter ties measured vertically above the top of the rafter support walls.

H_R = Height of roof ridge measured vertically above the top of the rafter support walls.

TABLE R802.5.1(9)
RAFTER/CEILING JOIST HEEL JOINT CONNECTIONS[a, b, c, d, e, f, h]

RAFTER SLOPE	RAFTER SPACING (inches)	GROUND SNOW LOAD (psf)															
		20[g]				30				50				70			
		Roof span (feet)															
		12	20	28	36	12	20	28	36	12	20	28	36	12	20	28	36
		Required number of 16d common nails[a, b] per heel joint splices[c, d, e, f]															
3:12	12	4	6	8	10	4	6	8	11	5	8	12	15	6	11	15	20
	16	5	8	10	13	5	8	11	14	6	11	15	20	8	14	20	26
	24	7	11	15	19	7	11	16	21	9	16	23	30	12	21	30	39
4:12	12	3	5	6	8	3	5	6	8	4	6	9	11	5	8	12	15
	16	4	6	8	10	4	6	8	11	5	8	12	15	6	11	15	20
	24	5	8	12	15	5	9	12	16	7	12	17	22	9	16	23	29
5:12	12	3	4	5	6	3	4	5	7	3	5	7	9	4	7	9	12
	16	3	5	6	8	3	5	7	9	4	7	9	12	5	9	12	16
	24	4	7	9	12	4	7	10	13	6	10	14	18	7	13	18	23
7:12	12	3	4	4	5	3	3	4	5	3	4	5	7	3	5	7	9
	16	3	4	5	6	3	4	5	6	3	5	7	9	4	6	9	11
	24	3	5	7	9	3	5	7	9	4	7	10	13	5	9	13	17
9:12	12	3	3	4	4	3	3	3	4	3	3	4	5	3	4	5	7
	16	3	4	4	5	3	3	4	5	3	4	5	7	3	5	7	9
	24	3	4	6	7	3	4	6	7	3	6	8	10	4	7	10	13
12:12	12	3	3	3	3	3	3	3	3	3	3	3	4	3	3	4	5
	16	3	3	4	4	3	3	3	4	3	3	4	5	3	4	5	7
	24	3	4	4	5	3	3	4	6	3	4	6	8	3	6	8	10

For SI: 1 inch = 25.4 mm, 1 foot = 304.8 mm, 1 pound per square foot = 0.0479 kPa.

a. 40d box nails shall be permitted to be substituted for 16d common nails.

b. Nailing requirements shall be permitted to be reduced 25 percent if nails are clinched.

c. Heel joint connections are not required when the ridge is supported by a load-bearing wall, header or ridge beam.

d. When intermediate support of the rafter is provided by vertical struts or purlins to a load-bearing wall, the tabulated heel joint connection requirements shall be permitted to be reduced proportionally to the reduction in span.

e. Equivalent nailing patterns are required for ceiling joist to ceiling joist lap splices.

f. When rafter ties are substituted for ceiling joists, the heel joint connection requirement shall be taken as the tabulated heel joint connection requirement for two-thirds of the actual rafter slope.

g. Applies to roof live load of 20 psf or less.

h. Tabulated heel joint connection requirements assume that ceiling joists or rafter ties are located at the bottom of the attic space. When ceiling joists or rafter ties are located higher in the attic, heel joint connection requirements shall be increased by the following factors:

H_C/H_R	Heel Joint Connection Adjustment Factor
1/3	1.5
1/4	1.33
1/5	1.25
1/6	1.2
1/10 or less	1.11

where:

H_C = Height of ceiling joists or rafter ties measured vertically above the top of the rafter support walls.

H_R = Height of roof ridge measured vertically above the top of the rafter support walls.

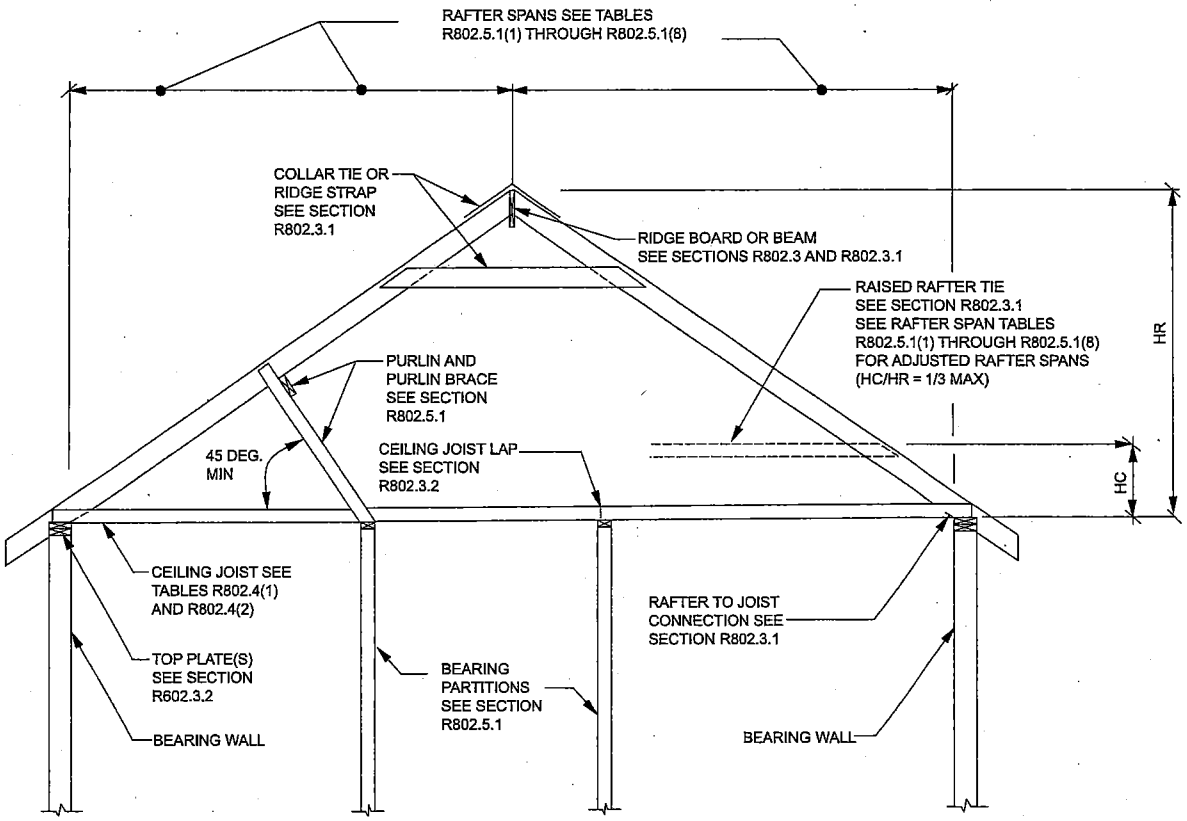

For SI: 1 inch = 25.4 mm, 1 foot = 305 mm, 1 degree = 0.018 rad.

Note: Where ceiling joists run perpendicular to the rafter, rafter ties shall be installed in accordance with Section R802.3.1.

H_C = Height of ceiling joists or rafter ties measured vertically above the top of rafter support walls.

H_R = Height of roof ridge measured vertically above the top of the rafter support walls.

FIGURE R802.5.1
BRACED RAFTER CONSTRUCTION

half the width of the top plate. It shall be of material capable of transmitting the loads transferred through it.

R802.7 Cutting, drilling and notching. Structural roof members shall not be cut, bored or notched in excess of the limitations specified in this section.

R802.7.1 Sawn lumber. Cuts, notches, and holes in solid lumber joists, rafters, blocking and beams shall comply with the provisions of R502.8.1 except that cantilevered portions of rafters shall be permitted in accordance with Section R802.7.1.1.

R802.7.1.1 Cantilevered portions of rafters. Notches on cantilevered portions of rafters are permitted provided the dimension of the remaining portion of the rafter is not less than $3^1/_2$ inches (89 mm) and the length of the cantilever does not exceed 24 inches (610 mm) in accordance with Figure R802.7.1.1.

R802.7.1.2 Ceiling joist taper cut. Taper cuts at the ends of the ceiling joist shall not exceed one-fourth the depth of the member in accordance with Figure R802.7.1.2.

R802.7.2 Engineered wood products. Cuts, notches and holes bored in trusses, structural composite lumber, structural glue-laminated members or I-joists are prohibited except where permitted by the manufacturer's recommendations or where the effects of such alterations are specifically considered in the design of the member by a registered design professional.

R802.8 Lateral support. Roof framing members and ceiling joists having a depth-to-thickness ratio exceeding 5 to 1 based on nominal dimensions shall be provided with lateral support at points of bearing to prevent rotation. For roof rafters with ceiling joists attached per Table R602.3(1), the depth-to-thickness ratio for the total assembly shall be determined using the combined thickness of the rafter plus the attached ceiling joist.

Exception: Roof trusses shall be braced in accordance with Section R802.10.3.

R802.8.1 Bridging. Rafters and ceiling joists having a depth-to-thickness ratio exceeding 6 to 1 based on nominal dimensions shall be supported laterally by solid blocking, diagonal bridging (wood or metal) or a continuous 1-inch

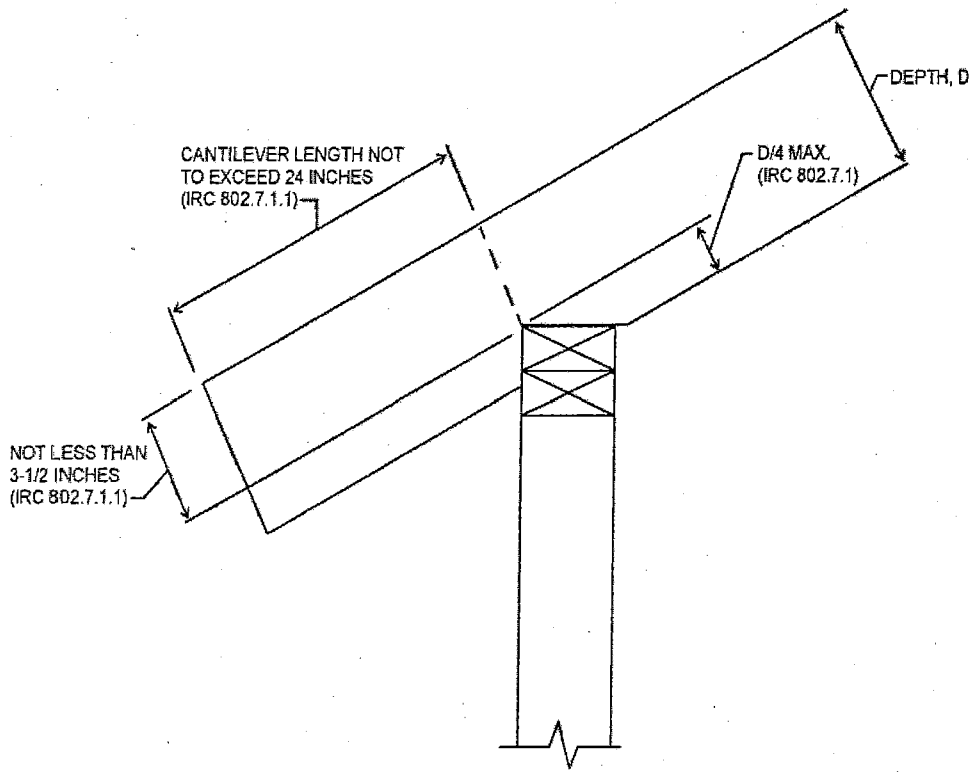

For SI: 1 inch = 25.4 mm.

FIGURE R802.7.1.1
RAFTER NOTCH

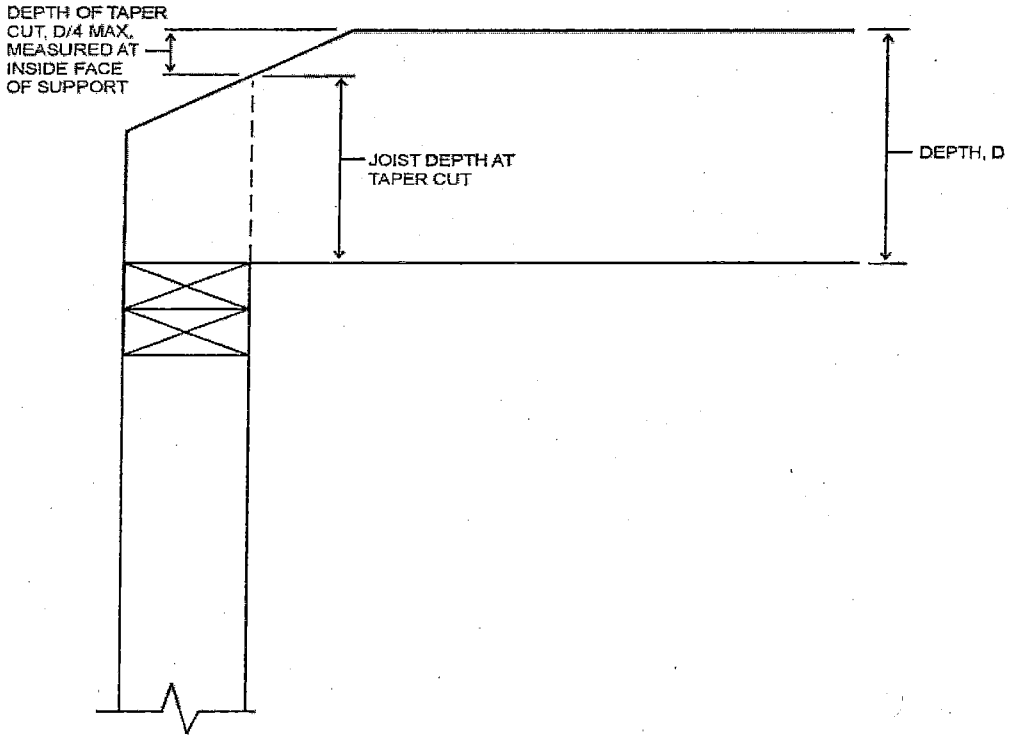

FIGURE R802.7.1.2
CEILING JOIST TAPER CUT

by 3-inch (25 mm by 76 mm) wood strip nailed across the rafters or ceiling joists at intervals not exceeding 8 feet (2438 mm).

R802.9 Framing of openings. Openings in roof and ceiling framing shall be framed with header and trimmer joists. When the header joist span does not exceed 4 feet (1219 mm), the header joist may be a single member the same size as the ceiling joist or rafter. Single trimmer joists may be used to carry a single header joist that is located within 3 feet (914 mm) of the trimmer joist bearing. When the header joist span exceeds 4 feet (1219 mm), the trimmer joists and the header joist shall be doubled and of sufficient cross section to support the ceiling joists or rafter framing into the header. Approved hangers shall be used for the header joist to trimmer joist connections when the header joist span exceeds 6 feet (1829 mm). Tail joists over 12 feet (3658 mm) long shall be supported at the header by framing anchors or on ledger strips not less than 2 inches by 2 inches (51 mm by 51 mm).

R802.10 Wood trusses.

R802.10.1 Truss design drawings. Truss design drawings, prepared in conformance to Section R802.10.1, shall be provided to the building official and approved prior to installation. Truss design drawings shall include, at a minimum, the information specified below. Truss design drawings shall be provided with the shipment of trusses delivered to the jobsite.

1. Slope or depth, span and spacing.
2. Location of all joints.
3. Required bearing widths.
4. Design loads as applicable.
   - 4.1. Top chord live load (as determined from Section R301.6).
   - 4.2. Top chord dead load.
   - 4.3. Bottom chord live load.
   - 4.4. Bottom chord dead load.
   - 4.5. Concentrated loads and their points of application.
   - 4.6. Controlling wind and earthquake loads.
5. Adjustments to lumber and joint connector design values for conditions of use.
6. Each reaction force and direction.
7. Joint connector type and description (e.g., size, thickness or gage) and the dimensioned location of each joint connector except where symmetrically located relative to the joint interface.
8. Lumber size, species and grade for each member.
9. Connection requirements for:
   - 9.1. Truss to girder-truss.
   - 9.2. Truss ply to ply.
   - 9.3. Field splices.
10. Calculated deflection ratio and/or maximum description for live and total load.
11. Maximum axial compression forces in the truss members to enable the building designer to design the size, connections and anchorage of the permanent continuous lateral bracing. Forces shall be shown on the truss design drawing or on supplemental documents.
12. Required permanent truss member bracing location.

R802.10.2 Design. Wood trusses shall be designed in accordance with accepted engineering practice. The design and manufacture of metal-plate-connected wood trusses shall comply with ANSI/TPI 1. The truss design drawings shall be prepared by a registered *design* professional.

R802.10.2.1 Applicability limits. The provisions of this section shall control the design of truss roof framing when snow controls for buildings not greater than 60 feet (18 288 mm) in length perpendicular to the joist, rafter or truss span, not greater than 36 feet (10 973 mm) in width parallel to the joist, rafter or truss span, not more than three stories above grade plane in height, and roof slopes not smaller than 3:12 (25 percent slope) or greater than 12:12 (100 percent slope). Truss roof framing constructed in accordance with the provisions of this section shall be limited to sites subjected to a maximum design wind speed of 110 miles per hour (49 m/s), Exposure A, B or C, and a maximum ground snow load of 70 psf (3352 Pa). For consistent loading of all truss types, roof snow load is to be computed as: $0.7\ p_g$.

R802.10.3 Bracing. Trusses shall be braced to prevent rotation and provide lateral stability in accordance with the requirements specified in the construction documents for the building and on the individual truss design drawings. In the absence of specific bracing requirements, trusses shall be braced in accordance with accepted industry practice such as the SBCA *Building Component Safety Information (BCSI) Guide to Good Practice for Handling, Installing & Bracing of Metal Plate Connected Wood Trusses.*

R802.10.4 Alterations to trusses. Truss members shall not be cut, notched, drilled, spliced or otherwise altered in any way without the approval of a registered design professional. Alterations resulting in the addition of load (e.g., HVAC equipment, water heater) that exceeds the design load for the truss shall not be permitted without verification that the truss is capable of supporting such additional loading.

R802.11 Roof tie-down.

R802.11.1 Uplift resistance. Roof assemblies shall have uplift resistance in accordance with Sections R802.11.1.2 and R802.11.1.3.

Where the uplift force does not exceed 200 pounds, rafters and trusses spaced not more than 24 inches (610 mm) on center shall be permitted to be attached to their supporting wall assemblies in accordance with Table R602.3(1).

Where the basic wind speed does not exceed 90 mph, the wind exposure category is B, the roof pitch is 5:12 or

greater, and the roof span is 32 feet (9754 mm) or less, rafters and trusses spaced not more than 24 inches (610 mm) on center shall be permitted to be attached to their supporting wall assemblies in accordance with Table R602.3(1).

R802.11.1.2 Truss uplift resistance. Trusses shall be attached to supporting wall assemblies by connections capable of resisting uplift forces as specified on the truss design drawings. Uplift forces shall be permitted to be determined as specified by Table R802.11, if applicable, or as determined by accepted engineering practice.

R802.11.1.3 Rafter uplift resistance. Individual rafters shall be attached to supporting wall assemblies by connections capable of resisting uplift forces as determined by Table R802.11 or as determined by accepted engineering practice. Connections for beams used in a roof system shall be designed in accordance with accepted engineering practice.

SECTION R803
ROOF SHEATHING

R803.1 Lumber sheathing. Allowable spans for lumber used as roof sheathing shall conform to Table R803.1. Spaced lumber sheathing for wood shingle and shake roofing shall conform to the requirements of Sections R905.7 and R905.8. Spaced lumber sheathing is not allowed in Seismic Design Category D_2.

TABLE R803.1
MINIMUM THICKNESS OF LUMBER ROOF SHEATHING

RAFTER OR BEAM SPACING (inches)	MINIMUM NET THICKNESS (inches)
24	$^5/_8$
48[a]	$1^1/_2$ T & G
60[b]	
72[c]	

For SI: 1 inch = 25.4 mm.
a. Minimum 270 F_b, 340,000 E.
b. Minimum 420 F_b, 660,000 E.
c. Minimum 600F_b, 1,150,000 E.

R803.2 Wood structural panel sheathing.

R803.2.1 Identification and grade. Wood structural panels shall conform to DOC PS 1, DOC PS 2 or, when manufactured in Canada, CSA O437 or CSA O325, and shall be identified for grade, bond classification, and Performance Category by a grade mark or certificate of inspection issued by an approved agency. Wood structural panels shall comply with the grades specified in Table R503.2.1.1(1).

R803.2.1.1 Exposure durability. All wood structural panels, when designed to be permanently exposed in outdoor applications, shall be of an exterior exposure durability. Wood structural panel roof sheathing exposed to the underside may be of interior type bonded with exterior glue, identified as Exposure 1.

R803.2.1.2 Fire-retardant-treated plywood. The allowable unit stresses for fire-retardant-treated plywood, including fastener values, shall be developed from an approved method of investigation that considers the effects of anticipated temperature and humidity to which the fire-retardant-treated plywood will be subjected, the type of treatment and redrying process. The fire-retardant-treated plywood shall be graded by an approved agency.

R803.2.2 Allowable spans. The maximum allowable spans for wood structural panel roof sheathing shall not exceed the values set forth in Table R503.2.1.1(1), or APA E30.

R803.2.3 Installation. Wood structural panel used as roof sheathing shall be installed with joints staggered or not staggered in accordance with Table R602.3(1), or APA E30 for wood roof framing or with Table R804.3 for steel roof framing.

SECTION R804
STEEL ROOF FRAMING

R804.1 General. Elements shall be straight and free of any defects that would significantly affect their structural performance. Cold-formed steel roof framing members shall comply with the requirements of this section.

R804.1.1 Applicability limits. The provisions of this section shall control the construction of cold-formed steel roof framing for buildings not greater than 60 feet (18 288 mm) perpendicular to the joist, rafter or truss span, not greater than 40 feet (12 192 mm) in width parallel to the joist span or truss, less than or equal to three stories above grade plane and with roof slopes not less than 3:12 (25-percent slope) or greater than 12:12 (100-percent slope). Cold-formed steel roof framing constructed in accordance with the provisions of this section shall be limited to sites subjected to a maximum design wind speed of 110 miles per hour (49 m/s), Exposure B or C, and a maximum ground snow load of 70 pounds per square foot (3350 Pa).

R804.1.2 In-line framing. Cold-formed steel roof framing constructed in accordance with Section R804 shall be located in line with load-bearing studs in accordance with Figure R804.1.2 and the tolerances specified as follows:

1. The maximum tolerance shall be $^3/_4$ inch (19.1 mm) between the centerline of the horizontal framing member and the centerline of the vertical framing member.
2. Where the centerline of the horizontal framing member and bearing stiffener are located to one side of the center line of the vertical framing member, the maximum tolerance shall be $^1/_8$ inch (3 mm) between the web of the horizontal framing member and the edge of the vertical framing member.

TABLE R802.11
RAFTER OR TRUSS UPLIFT CONNECTION FORCES FROM WIND (POUNDS PER CONNECTION)[a, b, c, d, e, f, g, h]

RAFTER OR TRUSS SPACING	ROOF SPAN (feet)	EXPOSURE B							
		Basic Wind Speed (mph)							
		85		90		100		110	
		Roof Pitch		Roof Pitch		Roof Pitch		Roof Pitch	
		< 5:12	≥ 5:12	< 5:12	≥ 5:12	< 5:12	≥ 5:12	< 5:12	≥ 5:12
12″ o.c.	12	47	41	62	54	93	81	127	110
	18	59	51	78	68	119	104	165	144
	24	70	61	93	81	145	126	202	176
	28	77	67	104	90	163	142	227	197
	32	85	74	115	100	180	157	252	219
	36	93	81	126	110	198	172	277	241
	42	105	91	143	124	225	196	315	274
	48	116	101	159	138	251	218	353	307
16″ o.c.	12	63	55	83	72	124	108	169	147
	18	78	68	103	90	159	138	219	191
	24	93	81	124	108	193	168	269	234
	28	102	89	138	120	217	189	302	263
	32	113	98	153	133	239	208	335	291
	36	124	108	168	146	264	230	369	321
	42	139	121	190	165	299	260	420	365
	48	155	135	212	184	335	291	471	410
24″ o.c.	12	94	82	124	108	186	162	254	221
	18	117	102	155	135	238	207	329	286
	24	140	122	186	162	290	252	404	351
	28	154	134	208	181	326	284	454	395
	32	170	148	230	200	360	313	504	438
	36	186	162	252	219	396	345	554	482
	42	209	182	285	248	449	391	630	548
	48	232	202	318	277	502	437	706	614
RAFTER OR TRUSS SPACING	ROOF SPAN (feet)	EXPOSURE C							
		Basic Wind Speed (mph)							
		85		90		100		110	
		Roof Pitch		Roof Pitch		Roof Pitch		Roof Pitch	
		< 5:12	≥ 5:12	< 5:12	≥ 5:12	< 5:12	≥ 5:12	< 5:12	≥ 5:12
12″ o.c.	12	94	82	114	99	157	137	206	179
	18	120	104	146	127	204	177	268	233
	24	146	127	179	156	251	218	330	287
	28	164	143	201	175	283	246	372	324
	32	182	158	224	195	314	273	414	360
	36	200	174	246	214	346	301	456	397
	42	227	197	279	243	394	343	520	452
	48	254	221	313	272	441	384	583	507

(continued)

TABLE R802.11—continued
RAFTER OR TRUSS UPLIFT CONNECTION FORCES FROM WIND (POUNDS PER CONNECTION)[a, b, c, d, e, f, g, h]

RAFTER OR TRUSS SPACING	ROOF SPAN (feet)	EXPOSURE C							
		Basic Wind Speed (mph)							
		85		90		100		110	
		Roof Pitch		Roof Pitch		Roof Pitch		Roof Pitch	
		< 5:12	≥ 5:12	< 5:12	≥ 5:12	< 5:12	≥ 5:12	< 5:12	≥ 5:12
16″ o.c.	12	125	109	152	132	209	182	274	238
	18	160	139	194	169	271	236	356	310
	24	194	169	238	207	334	291	439	382
	28	218	190	267	232	376	327	495	431
	32	242	211	298	259	418	364	551	479
	36	266	231	327	284	460	400	606	527
	42	302	263	372	324	524	456	691	601
	48	338	294	416	362	587	511	775	674
24″ o.c.	12	188	164	228	198	314	273	412	358
	18	240	209	292	254	408	355	536	466
	24	292	254	358	311	502	437	660	574
	28	328	285	402	350	566	492	744	647
	32	364	317	448	390	628	546	828	720
	36	400	348	492	428	692	602	912	793
	42	454	395	558	485	786	684	1040	905
	48	508	442	626	545	882	767	1166	1014

For SI: 1 inch = 25.4 mm, 1 foot = 304.8 mm, 1 mile per hour = 0.447 m/s, 1 pound = 0.454 kg, 1 pound per linear foot = 14.5 N/m.

a. The uplift connection forces are based on a maximum 33-foot mean roof height and Wind Exposure Category B or C. For Exposure D, the uplift connection force shall be selected from the Exposure C portion of the table using the next highest tabulated basic wind speed. The Adjustment Coefficients in Table R301.2(3) shall not be used to multiply the above forces for Exposures C and D or for other mean roof heights.

b. The uplift connection forces include an allowance for roof and ceiling assembly dead load of 15 psf.

c. The tabulated uplift connection forces are limited to a maximum roof overhang of 24 inches.

d. The tabulated uplift connection forces shall be permitted to be multiplied by 0.75 for connections not located within 8 feet of building corners.

e. For buildings with hip roofs with 5:12 and greater pitch, the tabulated uplift connection forces shall be permitted to be multiplied by 0.70. This reduction shall not be combined with any other reduction in tabulated forces.

f. For wall-to-wall and wall-to-foundation connections, the uplift connection force shall be permitted to be reduced by 60 plf for each full wall above.

g. Linear interpolation between tabulated roof spans and wind speeds shall be permitted.

h. The tabulated forces for a 12-inch on-center spacing shall be permitted to be used to determine the uplift load in pounds per linear foot.

R804.2 Structural framing. Load-bearing, cold-formed steel roof framing members shall comply with Figure R804.2(1) and with the dimensional and minimum thickness requirements specified in Tables R804.2(1) and R804.2(2). Tracks shall comply with Figure R804.2(2) and shall have a minimum flange width of $1^1/_4$ inches (32 mm).

R804.2.1 Material. Load-bearing, cold-formed steel framing members shall be cold-formed to shape from structural quality sheet steel complying with the requirements of one of the following:

1. ASTM A 653: Grades 33 and 50 (Class 1 and 3).
2. ASTM A 792: Grades 33 and 50A.
3. ASTM A 1003: Structural Grades 33 Type H and 50 Type H.

R804.2.2 Identification. Load-bearing, cold-formed steel framing members shall have a legible label, stencil, stamp or embossment with the following information as a minimum:

1. Manufacturer's identification.
2. Minimum base steel thickness in inches (mm).
3. Minimum coating designation.
4. Minimum yield strength, in kips per square inch (ksi) (MPa).

R804.2.3 Corrosion protection. Load-bearing, cold-formed steel framing shall have a metallic coating complying with ASTM A 1003 and one of the following:

1. A minimum of G 60 in accordance with ASTM A 653.
2. A minimum of AZ 50 in accordance with ASTM A 792.

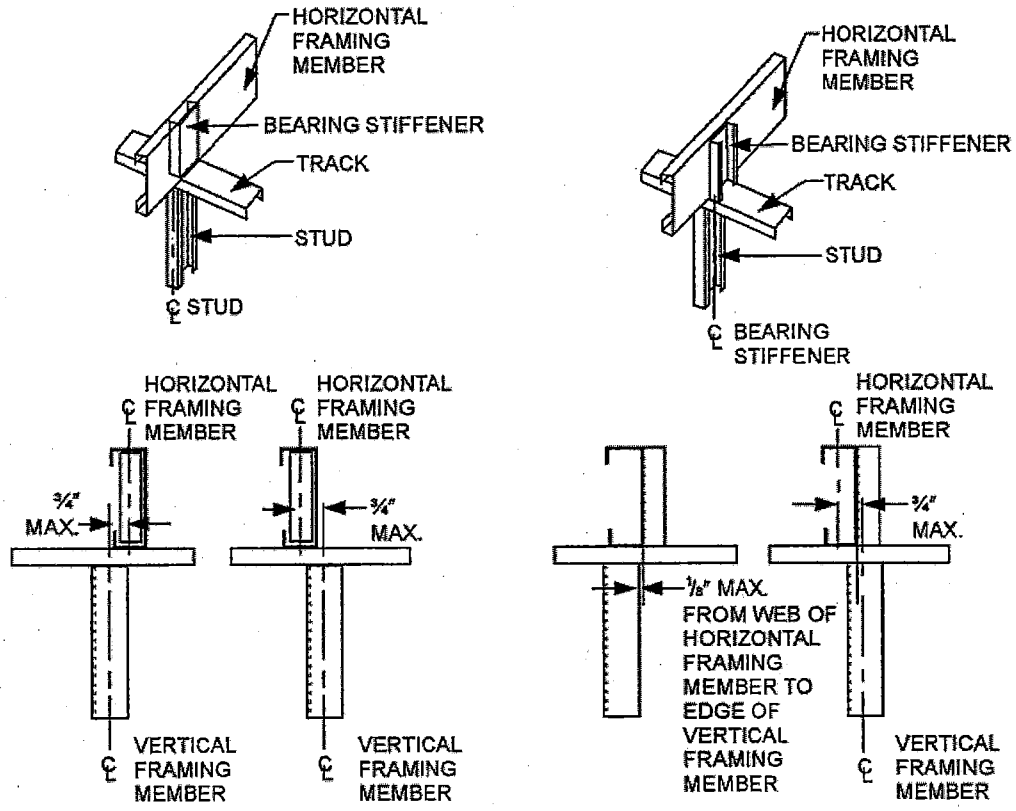

For SI: 1 inch = 25.4 mm.

FIGURE R804.1.2
IN-LINE FRAMING

TABLE R804.2(1)
LOAD-BEARING COLD-FORMED STEEL MEMBER SIZES

NOMINAL MEMBER SIZE MEMBER DESIGNATION[a]	WEB DEPTH (inches)	MINIMUM FLANGE WIDTH (inches)	MAXIMUM FLANGE WIDTH (inches)	MINIMUM LIP SIZE (inches)
350S162-t	3.5	1.625	2	0.5
550S162-t	5.5	1.625	2	0.5
800S162-t	8	1.625	2	0.5
1000S162-t	10	1.625	2	0.5
1200S162-t	12	1.625	2	0.5

For SI: 1 inch = 25.4 mm.

a. The member designation is defined by the first number representing the member depth in hundredths of an inch, the letter "S" representing a stud or joist member, the second number representing the flange width in hundredths of an inch, and the letter "t" shall be a number representing the minimum base metal thickness in mils [see Table R804.2(2)].

TABLE R804.2(2)
MINIMUM THICKNESS OF COLD-FORMED STEEL MEMBERS

DESIGNATION THICKNESS (mils)	MINIMUM BASE STEEL THICKNESS (inch)
33	0.0329
43	0.0428
54	0.0538
68	0.0677
97	0.0966

For SI: 1 inch = 25.4 mm, 1 mil = 0.0254 mm.

R804.2.4 Fastening requirements. Screws for steel-to-steel connections shall be installed with a minimum edge distance and center-to-center spacing of $^1/_2$ inch (13 mm), shall be self-drilling tapping, and shall conform to ASTM C 1513. Structural sheathing shall be attached to cold-formed steel roof rafters with minimum No. 8 self-drilling tapping screws that conform to ASTM C 1513. Screws for attaching structural sheathing to cold-formed steel roof framing shall have a minimum head diameter of 0.292 inch (7.4 mm) with countersunk heads and shall be installed with a minimum edge distance of $^3/_8$ inch (10 mm). Gypsum board ceilings shall be attached to cold-formed steel joists with minimum No. 6 screws conforming to ASTM C 954 or ASTM C 1513 with a bugle-head style and shall be installed in accordance with Section R805. For all connections, screws shall extend through the steel a minimum of three exposed threads. All fasteners shall have rust-inhibitive coating suitable for the installation in which they are being used, or be manufactured from material not susceptible to corrosion.

Where No. 8 screws are specified in a steel-to-steel connection, reduction of the required number of screws in the connection is permitted in accordance with the reduction factors in Table R804.2.4 when larger screws are used or when one of the sheets of steel being connected is thicker than 33 mils (0.84 mm). When applying the reduction factor, the resulting number of screws shall be rounded up.

TABLE R804.2.4
SCREW SUBSTITUTION FACTOR

SCREW SIZE	THINNEST CONNECTED STEEL SHEET (mils)	
	33	43
#8	1.0	0.67
#10	0.93	0.62
#12	0.86	0.56

For SI: 1 mil = 0.0254 mm.

R804.2.5 Web holes, web hole reinforcing and web hole patching. Web holes, web hole reinforcing, and web hole patching shall be in accordance with this section.

R804.2.5.1 Web holes. Web holes in roof framing members shall comply with all of the following conditions:

1. Holes shall conform to Figure R804.2.5.1;
2. Holes shall be permitted only along the centerline of the web of the framing member;
3. Center-to-center spacing of holes shall not be less than 24 inches (610 mm);
4. The web hole width shall not be greater than one-half the member depth, or $2^1/_2$ inches (64.5 mm);
5. Holes shall have a web hole length not exceeding $4^1/_2$ inches (114 mm); and

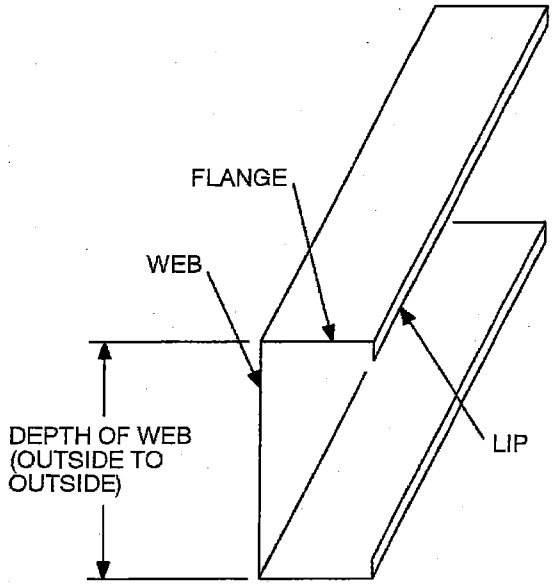

FIGURE R804.2(1)
C-SHAPED SECTION

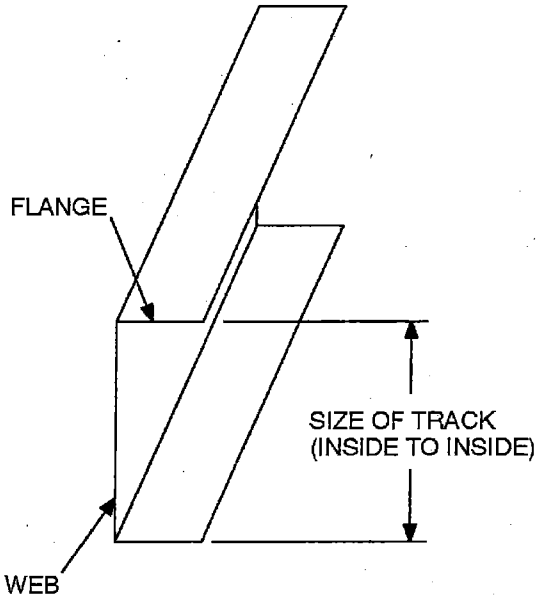

FIGURE R804.2(2)
TRACK SECTION

6. The minimum distance between the edge of the bearing surface and the edge of the web hole shall not be less than 10 inches (254 mm).

Framing members with web holes not conforming to the above requirements shall be reinforced in accordance with Section R804.2.5.2, patched in accordance with Section R804.2.5.3 or designed in accordance with accepted engineering practices.

R804.2.5.2 Web hole reinforcing. Reinforcement of web holes in ceiling joists not conforming to the requirements of Section R804.2.5.1 shall be permitted if the hole is located fully within the center 40 percent of the span and the depth and length of the hole does not exceed 65 percent of the flat width of the web. The reinforcing shall be a steel plate or C-shape section with a hole that does not exceed the web hole size limitations of Section R804.2.5.1 for the member being reinforced. The steel reinforcing shall be the same thickness as the receiving member and shall extend at least 1 inch (25.4 mm) beyond all edges of the hole. The steel reinforcing shall be fastened to the web of the receiving member with No. 8 screws spaced no greater than 1 inch (25.4 mm) center-to-center along the edges of the patch with minimum edge distance of $^1/_2$ inch (13 mm).

R804.2.5.3 Hole patching. Patching of web holes in roof framing members not conforming to the requirements in Section R804.2.5.1 shall be permitted in accordance with either of the following methods:

1. Framing members shall be replaced or designed in accordance with accepted engineering practices where web holes exceed the following size limits:
   1.1. The depth of the hole, measured across the web, exceeds 70 percent of the flat width of the web; or
   1.2. The length of the hole measured along the web, exceeds 10 inches (254 mm) or the depth of the web, whichever is greater.
2. Web holes not exceeding the dimensional requirements in Section R804.2.5.3, Item 1, shall be patched with a solid steel plate, stud section or track section in accordance with Figure R804.2.5.3. The steel patch shall, as a minimum, be the same thickness as the receiving member and shall extend at least 1 inch (25 mm) beyond all edges of the hole. The steel patch shall be fastened to the web of the receiving member with No.8 screws spaced no greater than 1 inch (25 mm) center-to-center along the edges of the patch with minimum edge distance of $^1/_2$ inch (13 mm).

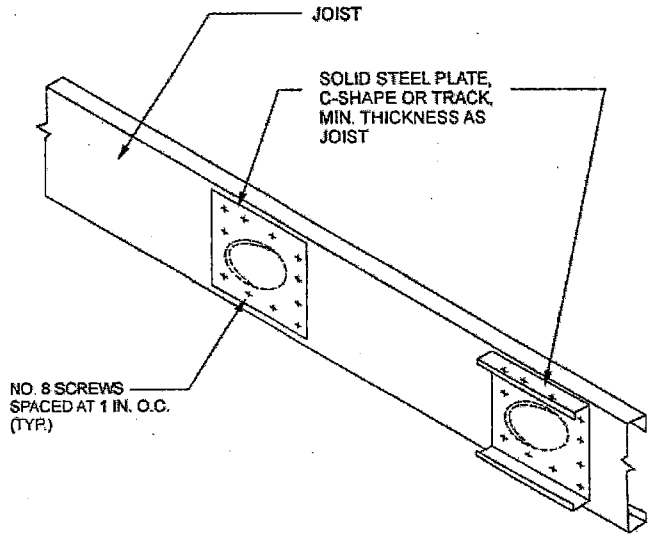

For SI: 1 inch = 25.4 mm.

FIGURE R804.2.5.3
WEB HOLE PATCH

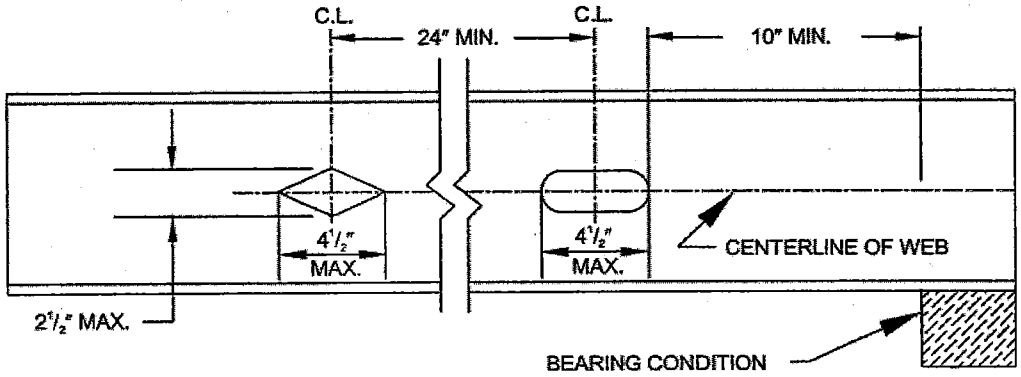

For SI: 1 inch = 25.4 mm.

FIGURE R804.2.5.1
WEB HOLES

R804.3 Roof construction. Cold-formed steel roof systems constructed in accordance with the provisions of this section shall consist of both ceiling joists and rafters in accordance with Figure R804.3 and fastened in accordance with Table R804.3, and hip framing in accordance with Section R804.3.3.

R804.3.1 Ceiling joists. Cold-formed steel ceiling joists shall be in accordance with this section.

R804.3.1.1 Minimum ceiling joist size. Ceiling joist size and thickness shall be determined in accordance with the limits set forth in Tables R804.3.1.1(1) through R804.3.1.1(8). When determining the size of ceiling joists, the lateral support of the top flange shall be classified as unbraced, braced at mid-span or braced at third points in accordance with Section R804.3.1.4. Where sheathing material is attached to the top flange of ceiling joists or where the bracing is spaced closer than third point of the joists, the "third point" values from Tables R804.3.1.1(1) through R804.3.1.1(8) shall be used.

Ceiling joists shall have a bearing support length of not less than $1^1/_2$ inches (38 mm) and shall be connected to roof rafters (heel joint) with No. 10 screws in accordance with Figures R804.3.1.1(1) and R804.3.1.1(2) and Table 804.3.1.1(9).

When continuous joists are framed across interior bearing supports, the interior bearing supports shall be located within 24 inches (610 mm) of midspan of the ceiling joist, and the individual spans shall not exceed the applicable spans in Tables R804.3.1.1(2), R804.3.1.1(4), R804.3.1.1(6) and R804.3.1.1(8).

When the attic is to be used as an occupied space, the ceiling joists shall be designed in accordance with Section R505.

R804.3.1.2 Ceiling joist bearing stiffeners. Where required in Tables R804.3.1.1(1) through R804.3.1.1(8), bearing stiffeners shall be installed at each bearing support in accordance with Figure R804.3.1.1(2). Bearing stiffeners shall be fabricated from a C-shaped or track member in accordance with the one of following:

1. C-shaped bearing stiffeners shall be a minimum 33 mils (0.84 mm) thick.
2. Track bearing stiffener shall be a minimum 43 mils (1.09 mm) thick.

The minimum length of a bearing stiffener shall be the depth of member being stiffened minus $^3/_8$ inch (9.5 mm). Each stiffener shall be fastened to the web of the ceiling joist with a minimum of four No. 8 screws equally spaced as shown in Figure R804.3.1.1(2). Installation of stiffeners shall be permitted on either side of the web.

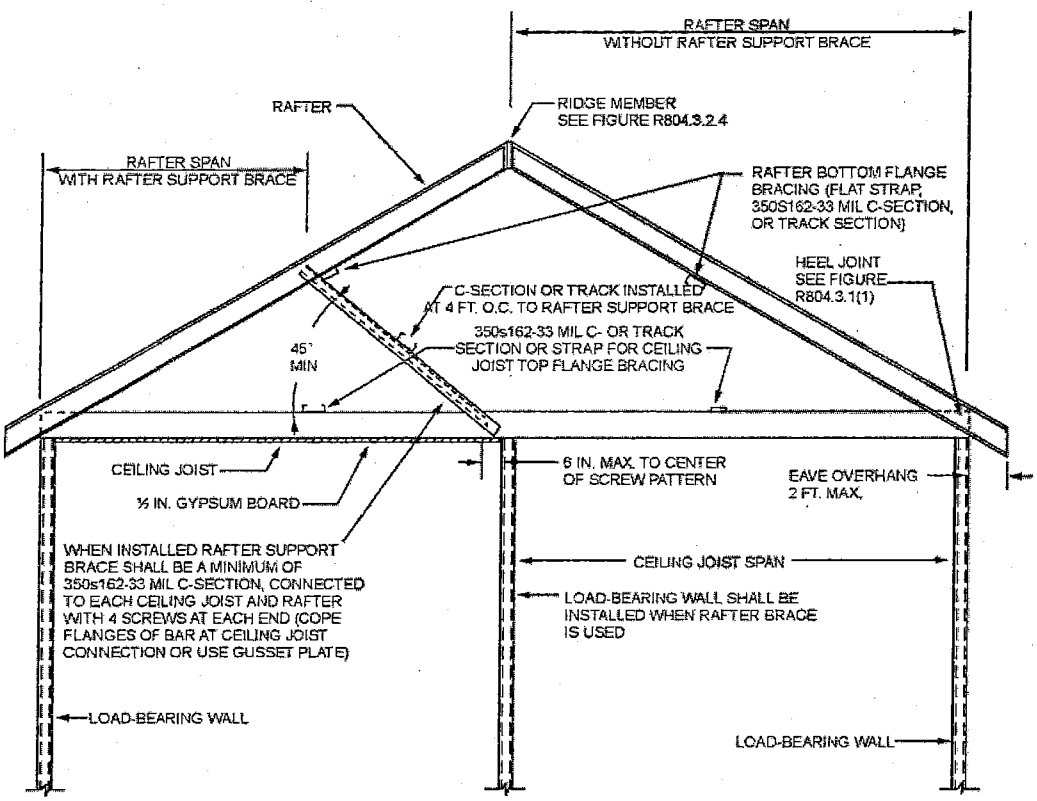

For SI: 1 inch = 25.4 mm, 1 foot = 304.8 mm, 1 mil = 0.0254 mm.

FIGURE R804.3
STEEL ROOF CONSTRUCTION

TABLE R804.3
ROOF FRAMING FASTENING SCHEDULE[a, b]

DESCRIPTION OF BUILDING ELEMENTS	NUMBER AND SIZE OF FASTENERS	SPACING OF FASTENERS
Ceiling joist to top track of load-bearing wall	2 No. 10 screws	Each joist
Roof sheathing (oriented strand board or plywood) to rafter	No. 8 screws	6″ o.c. on edges and 12″ o.c. at interior supports. 6″ o.c. at gable end truss
Truss to bearing wall[a]	2 No. 10 screws	Each truss
Gable end truss to end wall top track	No. 10 screws	12″ o.c.
Rafter to ceiling joist	Minimum No. 10 screws, per Table R804.3.1.1(9)	Evenly spaced, not less than $^1/_2$″ from all edges

For SI: 1 inch = 25.4 mm, 1 foot = 304.8 mm, 1 pound per square foot = 0.0479 kPa, 1 mil = 0.0254 mm.

a. Screws shall be applied through the flanges of the truss or ceiling joist or a 54-mil clip angle shall be used with two No. 10 screws in each leg. See Section R804.3.9 for additional requirements to resist uplift forces.

b. Spacing of fasteners on roof sheathing panel edges applies to panel edges supported by framing members and at all roof plane perimeters. Blocking of roof sheathing panel edges perpendicular to the framing members shall not be required except at the intersection of adjacent roof planes. Roof perimeter shall be supported by framing members or cold-formed blocking of the same depth and gage as the floor members.

TABLE R804.3.1.1(1)
CEILING JOIST SPANS
SINGLE SPANS WITH BEARING STIFFENERS
10 PSF LIVE LOAD (NO ATTIC STORAGE)[a, b, c] 33 KSI STEEL

MEMBER DESIGNATION	ALLOWABLE SPAN (feet-inches)					
	Lateral Support of Top (Compression) Flange					
	Unbraced		Mid-span Bracing		Third-point Bracing	
	Ceiling Joist Spacing (inches)					
	16	24	16	24	16	24
350S162-33	9′-5″	8′-6″	12′-2″	10′-4″	12′-2″	10′-7″
350S162-43	10′-3″	9′-2″	12′-10″	11′-2″	12′-10″	11′-2″
350S162-54	11′-1″	9′-11″	13′-9″	12′-0″	13′-9″	12′-0″
350S162-68	12′-1″	10′-9″	14′-8″	12′-10″	14′-8″	12′-10″
350S162-97	14′-4″	12′-7″	16′-4″	14′-3″	16′-4″	14′-3″
550S162-33	10′-7″	9′-6″	14′-10″	12′-10″	15′-11″	13′-4″
550S162-43	11′-8″	10′-6″	16′-4″	14′-3″	17′-10″	15′-3″
550S162-54	12′-6″	11′-2″	17′-7″	15′-7″	19′-5″	16′-10″
550S162-68	13′-6″	12′-1″	19′-2″	17′-1″	21′-0″	18′-4″
550S162-97	15′-9″	13′-11″	21′-8″	19′-3″	23′-5″	20′-5″
800S162-33	12′-2″	10′-11″	17′-8″	15′-10″	19′-10″	17′-1″
800S162-43	13′-0″	11′-9″	18′-10″	17′-0″	21′-6″	19′-1″
800S162-54	13′-10″	12′-5″	20′-0″	18′-0″	22′-9″	20′-4″
800S162-68	14′-11″	13′-4″	21′-3″	19′-1″	24′-1″	21′-8″
800S162-97	17′-1″	15′-2″	23′-10″	21′-3″	26′-7″	23′-10″
1000S162-43	13′-11″	12′-6″	20′-2″	18′-3″	23′-1″	20′-9″
1000S162-54	14′-9″	13′-3″	21′-4″	19′-3″	24′-4″	22′-0″
1000S162-68	15′-10″	14′-2″	22′-8″	20′-5″	25′-9″	23′-2″
1000S162-97	18′-0″	16′-0″	25′-3″	22′-7″	28′-3″	25′-4″
1200S162-43	14′-8″	13′-3″	21′-4″	19′-3″	24′-5″	21′-8″
1200S162-54	15′-7″	14′-0″	22′-6″	20′-4″	25′-9″	23′-2″
1200S162-68	16′-8″	14′-11″	23′-11″	21′-6″	27′-2″	24′-6″
1200S162-97	18′-9″	16′-9″	26′-6″	23′-8″	29′-9″	26′-9″

For SI: 1 inch = 25.4 mm, 1 foot = 304.8 mm, 1 pound per square foot = 0.0479 kPa.

a. Deflection criterion: *L*/240 for total loads.

b. Ceiling dead load = 5 psf.

c. Bearing stiffeners are required at all bearing points and concentrated load locations.

TABLE R804.3.1.1(2)
CEILING JOIST SPANS
TWO EQUAL SPANS WITH BEARING STIFFENERS
10 PSF LIVE LOAD (NO ATTIC STORAGE)[a, b, c] 33 KSI STEEL

MEMBER DESIGNATION	ALLOWABLE SPAN (feet-inches)					
	Lateral Support of Top (Compression) Flange					
	Unbraced		Mid-span Bracing		Third-point Bracing	
	Ceiling Joist Spacing (inches)					
	16	24	16	24	16	24
350S162-33	12′-11″	10′-11″	13′-5″	10′-11″	13′-5″	10′-11″
350S162-43	14′-2″	12′-8″	15′-10″	12′-11″	15′-10″	12′-11″
350S162-54	15′-6″	13′-10″	17′-1″	14′-6″	17′-9″	14′-6″
350S162-68	17′-3″	15′-3″	18′-6″	16′-1″	19′-8″	16′-1″
350S162-97	20′-10″	18′-4″	21′-5″	18′-10″	21′-11″	18′-10″
550S162-33	14′-4″	12′-11″	16′-7″	14′-1″	17′-3″	14′-1″
550S162-43	16′-0″	14′-1″	17′-11″	16′-1″	20′-7″	16′-10″
550S162-54	17′-4″	15′-6″	19′-5″	17′-6″	23′-2″	19′-0″
550S162-68	19′-1″	16′-11″	20′-10″	18′-8″	25′-2″	21′-5″
550S162-97	22′-8″	19′-9″	23′-6″	20′-11″	27′-11″	25′-1″
800S162-33	16′-5″	14′-10″	19′-2″	17′-3″	23′-1″	18′-3″
800S162-43	17′-9″	15′-11″	20′-6″	18′-5″	25′-0″	22′-6″
800S162-54	19′-1″	17′-1″	21′-8″	19′-6″	26′-4″	23′-9″
800S162-68	20′-9″	18′-6″	23′-1″	20′-9″	28′-0″	25′-2″
800S162-97	24′-5″	21′-6″	26′-0″	23′-2″	31′-1″	27′-9″
1000S162-43	18′-11″	17′-0″	21′-11″	19′-9″	26′-8″	24′-1″
1000S162-54	20′-3″	18′-2″	23′-2″	20′-10″	28′-2″	25′-5″
1000S162-68	21′-11″	19′-7″	24′-7″	22′-2″	29′-10″	26′-11″
1000S162-97	25′-7″	22′-7″	27′-6″	24′-6″	33′-0″	29′-7″
1200S162-43	19′-11″	17′-11″	23′-1″	20′-10″	28′-3″	25′-6″
1200S162-54	21′-3″	19′-1″	24′-5″	22′-0″	29′-9″	26′-10″
1200S162-68	23′-0″	20′-7″	25′-11″	23′-4″	31′-6″	28′-4″
1200S162-97	26′-7″	23′-6″	28′-9″	25′-10″	34′-8″	31′-1″

For SI: 1 inch = 25.4 mm, 1 foot = 304.8 mm, 1 pound per square foot = 0.0479 kPa.

a. Deflection criterion: *L*/240 for total loads.

b. Ceiling dead load = 5 psf.

c. Bearing stiffeners are required at all bearing points and concentrated load locations.

TABLE R804.3.1.1(3)
CEILING JOIST SPANS
SINGLE SPANS WITH BEARING STIFFENERS
20 PSF LIVE LOAD (LIMITED ATTIC STORAGE)[a, b, c] 33 KSI STEEL

MEMBER DESIGNATION	ALLOWABLE SPAN (feet-inches)					
	Lateral Support of Top (Compression) Flange					
	Unbraced		Mid-span Bracing		Third-point Bracing	
	Ceiling Joist Spacing (inches)					
	16	24	16	24	16	24
350S162-33	8′-2″	7′-2″	9′-9″	8′-1″	9′-11″	8′-1″
350S162-43	8′-10″	7′-10″	11′-0″	9′-5″	11′-0″	9′-7″
350S162-54	9′-6″	8′-6″	11′-9″	10′-3″	11′-9″	10′-3″
350S162-68	10′-4″	9′-2″	12′-7″	11′-0″	12′-7″	11′-0″
350S162-97	12′-1″	10′-8″	14′-0″	12′-0″	14′-0″	12′-0″
550S162-33	9′-2″	8′-3″	12′-2″	10′-2″	12′-6″	10′-5″
550S162-43	10′-1″	9′-1″	13′-7″	11′-7″	14′-5″	12′-2″
550S162-54	10′-9″	9′-8″	14′-10″	12′-10″	15′-11″	13′-6″
550S162-68	11′-7″	10′-4″	16′-4″	14′-0″	17′-5″	14′-11″
550S162-97	13′-4″	11′-10″	18′-5″	16′-2″	20′-1″	17′-1″
800S162-33	10′-7″	9′-6″	15′-1″	13′-0″	16′-2″	13′-7″
800S162-43	11′-4″	10′-2″	16′-5″	14′-6″	18′-2″	15′-9″
800S162-54	12′-0″	10′-9″	17′-4″	15′-6″	19′-6″	17′-0″
800S162-68	12′-10″	11′-6″	18′-5″	16′-6″	20′-10″	18′-3″
800S162-97	14′-7″	12′-11″	20′-5″	18′-3″	22′-11″	20′-5″
1000S162-43	12′-1″	10′-11″	17′-7″	15′-10″	19′-11″	17′-3″
1000S162-54	12′-10″	11′-6″	18′-7″	16′-9″	21′-2″	18′-10″
1000S162-68	13′-8″	12′-3″	19′-8″	17′-8″	22′-4″	20′-1″
1000S162-97	15′-4″	13′-8″	21′-8″	19′-5″	24′-5″	21′-11″
1200S162-43	12′-9″	11′-6″	18′-7″	16′-6″	20′-9″	18′-2″
1200S162-54	13′-6″	12′-2″	19′-7″	17′-8″	22′-5″	20′-2″
1200S162-68	14′-4″	12′-11″	20′-9″	18′-8″	23′-7″	21′-3″
1200S162-97	16′-1″	14′-4″	22′-10″	20′-6″	25′-9″	23′-2″

For SI: 1 inch = 25.4 mm, 1 foot = 304.8 mm, 1 pound per square foot = 0.0479 kPa.

a. Deflection criterion: *L*/240 for total loads.

b. Ceiling dead load = 5 psf.

c. Bearing stiffeners are required at all bearing points and concentrated load locations.

TABLE R804.3.1.1(4)
CEILING JOIST SPANS
TWO EQUAL SPANS WITH BEARING STIFFENERS
20 PSF LIVE LOAD (LIMITED ATTIC STORAGE)[a, b, c] 33 KSI STEEL

MEMBER DESIGNATION	ALLOWABLE SPAN (feet-inches)					
	Lateral Support of Top (Compression) Flange					
	Unbraced		Mid-span Bracing		Third-point Bracing	
	Ceiling Joist Spacing (inches)					
	16	24	16	24	16	24
350S162-33	10′-2″	8′-4″	10′-2″	8′-4″	10′-2″	8′-4″
350S162-43	12′-1″	9′-10″	12′-1″	9′-10″	12′-1″	9′-10″
350S162-54	13′-3″	11′-0″	13′-6″	11′-0″	13′-6″	11′-0″
350S162-68	14′-7″	12′-3″	15′-0″	12′-3″	15′-0″	12′-3″
350S162-97	17′-6″	14′-3″	17′-6″	14′-3″	17′-6″	14′-3″
550S162-33	12′-5″	10′-9″	13′-2″	10′-9″	13′-2″	10′-9″
550S162-43	13′-7″	12′-1″	15′-6″	12′-9″	15′-8″	12′-9″
550S162-54	14′-11″	13′-4″	16′-10″	14′-5″	17′-9″	14′-5″
550S162-68	16′-3″	14′-5″	18′-0″	16′-1″	20′-0″	16′-4″
550S162-97	19′-1″	16′-10″	20′-3″	18′-0″	23′-10″	19′-5″
800S162-33	14′-3″	12′-4″	16′-7″	12′-4″	16′-7″	12′-4″
800S162-43	15′-4″	13′-10″	17′-9″	16′-0″	21′-8″	17′-9″
800S162-54	16′-5″	14′-9″	18′-10″	16′-11″	22′-11″	20′-6″
800S162-68	17′-9″	15′-11″	20′-0″	18′-0″	24′-3″	21′-10″
800S162-97	20′-8″	18′-3″	22′-3″	19′-11″	26′-9″	24′-0″
1000S162-43	16′-5″	14′-9″	19′-0″	17′-2″	23′-3″	18′-11″
1000S162-54	17′-6″	15′-8″	20′-1″	18′-1″	24′-6″	22′-1″
1000S162-68	18′-10″	16′-10″	21′-4″	19′-2″	25′-11″	23′-4″
1000S162-97	21′-8″	19′-3″	23′-7″	21′-2″	28′-5″	25′-6″
1200S162-43	17′-3″	15′-7″	20′-1″	18′-2″	24′-6″	18′-3″
1200S162-54	18′-5″	16′-6″	21′-3″	19′-2″	25′-11″	23′-5″
1200S162-68	19′-9″	17′-8″	22′-6″	20′-3″	27′-4″	24′-8″
1200S162-97	22′-7″	20′-1″	24′-10″	22′-3″	29′-11″	26′-11″

For SI: 1 inch = 25.4 mm, 1 foot = 304.8 mm, 1 pound per square foot = 0.0479 kPa.

a. Deflection criterion: *L*/240 for total loads.

b. Ceiling dead load = 5 psf.

c. Bearing stiffeners are required at all bearing points and concentrated load locations.

TABLE R804.3.1.1(5)
CEILING JOIST SPANS
SINGLE SPANS WITHOUT BEARING STIFFENERS
10 PSF LIVE LOAD (NO ATTIC STORAGE)[a, b] 33 KSI STEEL

MEMBER DESIGNATION	ALLOWABLE SPAN (feet-inches)					
	Lateral Support of Top (Compression) Flange					
	Unbraced		Mid-span Bracing		Third-point Bracing	
	Ceiling Joist Spacing (inches)					
	16	24	16	24	16	24
350S162-33	9′-5″	8′-6″	12′-2″	10′-4″	12′-2″	10′-7″
350S162-43	10′-3″	9′-12″	13′-2″	11′-6″	13′-2″	11′-6″
350S162-54	11′-1″	9′-11″	13′-9″	12′-0″	13′-9″	12′-0″
350S162-68	12′-1″	10′-9″	14′-8″	12′-10″	14′-8″	12′-10″
350S162-97	14′-4″	12′-7″	16′-10″	14′-3″	16′-4″	14′-3″
550S162-33	10′-7″	9′-6″	14′-10″	12′-10″	15′-11″	13′-4″
550S162-43	11′-8″	10′-6″	16′-4″	14′-3″	17′-10″	15′-3″
550S162-54	12′-6″	11′-2″	17′-7″	15′-7″	19′-5″	16′-10″
550S162-68	13′-6″	12′-1″	19′-2″	17′-0″	21′-0″	18′-4″
550S162-97	15′-9″	13′-11″	21′-8″	19′-3″	23′-5″	20′-5″
800S162-33	—	—	—	—	—	—
800S162-43	13′-0″	11′-9″	18′-10″	17′-0″	21′-6″	19′-0″
800S162-54	13′-10″	12′-5″	20′-0″	18′-0″	22′-9″	20′-4″
800S162-68	14′-11″	13′-4″	21′-3″	19′-1″	24′-1″	21′-8″
800S162-97	17′-1″	15′-2″	23′-10″	21′-3″	26′-7″	23′-10″
1000S162-43	—	—	—	—	—	—
1000S162-54	14′-9″	13′-3″	21′-4″	19′-3″	24′-4″	22′-0″
1000S162-68	15′-10″	14′-2″	22′-8″	20′-5″	25′-9″	23′-2″
1000S162-97	18′-0″	16′-0″	25′-3″	22′-7″	28′-3″	25′-4″
1200S162-43	—	—	—	—	—	—
1200S162-54	—	—	—	—	—	—
1200S162-68	16′-8″	14′-11″	23′-11″	21′-6″	27′-2″	24′-6″
1200S162-97	18′-9″	16′-9″	26′-6″	23′-8″	29′-9″	26′-9″

For SI: 1 inch = 25.4 mm, 1 foot = 304.8 mm, 1 pound per square foot = 0.0479 kPa.

a. Deflection criterion: *L*/240 for total loads.

b. Ceiling dead load = 5 psf.

TABLE R804.3.1.1(6)
CEILING JOIST SPANS
TWO EQUAL SPANS WITHOUT BEARING STIFFENERS
10 PSF LIVE LOAD (NO ATTIC STORAGE)[a,b] 33 KSI STEEL

MEMBER DESIGNATION	ALLOWABLE SPAN (feet-inches)					
	Lateral Support of Top (Compression) Flange					
	Unbraced		Mid-span Bracing		Third-point Bracing	
	Ceiling Joist Spacing (inches)					
	16	24	16	24	16	24
350S162-33	11′-9″	8′-11″	11′-9″	8′-11″	11′-9″	8′-11″
350S162-43	14′-2″	11′-7″	14′-11″	11′-7″	14′-11″	11′-7″
350S162-54	15′-6″	13′-10″	17′-1″	13′-10″	17′-7″	13′-10″
350S162-68	17′-3″	15′-3″	18′-6″	16′-1″	19′-8″	16′-1″
350S162-97	20′-10″	18′-4″	21′-5″	18′-9″	21′-11″	18′-9″
550S162-33	13′-4″	9′-11″	13′-4″	9′-11″	13′-4″	9′-11″
550S162-43	16′-0″	13′-6″	17′-9″	13′-6″	17′-9″	13′-6″
550S162-54	17′-4″	15′-6″	19′-5″	16′-10″	21′-9″	16′-10″
550S162-68	19′-1″	16′-11″	20′-10″	18′-8″	24′-11″	20′-6″
550S162-97	22′-8″	20′-0″	23′-9″	21′-1″	28′-2″	25′-1″
800S162-33	—	—	—	—	—	—
800S162-43	17′-9″	15′-7″	20′-6″	15′-7″	21′-0″	15′-7″
800S162-54	19′-1″	17′-1″	21′-8″	19′-6″	26′-4″	23′-10″
800S162-68	20′-9″	18′-6″	23′-1″	20′-9″	28′-0″	25′-2″
800S162-97	24′-5″	21′-6″	26′-0″	23′-2″	31′-1″	27′-9″
1000S162-43	—	—	—	—	—	—
1000S162-54	20′-3″	18′-2″	23′-2″	20′-10″	28′-2″	21′-2″
1000S162-68	21′-11″	19′-7″	24′-7″	22′-2″	29′-10″	26′-11″
1000S162-97	25′-7″	22′-7″	27′-6″	24′-6″	33′-0″	29′-7″
1200S162-43	—	—	—	—	—	—
1200S162-54	—	—	—	—	—	—
1200S162-68	23′-0″	20′-7″	25′-11″	23′-4″	31′-6″	28′-4″
1200S162-97	26′-7″	23′-6″	28′-9″	25′-10″	34′-8″	31′-1″

For SI: 1 inch = 25.4 mm, 1 foot = 304.8 mm, 1 pound per square foot = 0.0479 kPa.

a. Deflection criterion: *L*/240 for total loads.

b. Ceiling dead load = 5 psf.

TABLE R804.3.1.1(7)
CEILING JOIST SPANS
SINGLE SPANS WITHOUT BEARING STIFFENERS
20 PSF LIVE LOAD (LIMITED ATTIC STORAGE)[a, b] 33 KSI STEEL

MEMBER DESIGNATION	ALLOWABLE SPAN (feet-inches)					
	Lateral Support of Top (Compression) Flange					
	Unbraced		Mid-span Bracing		Third-point Bracing	
	Ceiling Joist Spacing (inches)					
	16	24	16	24	16	24
350S162-33	8′-2″	6′-10″	9′-9″	6′-10″	9′-11″	6′-10″
350S162-43	8′-10″	7′-10″	11′-0″	9′-5″	11′-0″	9′-7″
350S162-54	9′-6″	8′-6″	11′-9″	10′-3″	11′-9″	10′-3″
350S162-68	10′-4″	9′-2″	12′-7″	11′-0″	12′-7″	11′-0″
350S162-97	12′-10″	10′-8″	13′-9″	12′-0″	13′-9″	12′-0″
550S162-33	9′-2″	8′-3″	12′-2″	8′-5″	12′-6″	8′-5″
550S162-43	10′-1″	9′-1″	13′-7″	11′-8″	14′-5″	12′-2″
550S162-54	10′-9″	9′-8″	14′-10″	12′-10″	15′-11″	13′-6″
550S162-68	11′-7″	10′-4″	16′-4″	14′-0″	17′-5″	14′-11″
550S162-97	13′-4″	11′-10″	18′-5″	16′-2″	20′-1″	17′-4″
800S162-33	—	—	—	—	—	—
800S162-43	11′-4″	10′-1″	16′-5″	13′-6″	18′-1″	13′-6″
800S162-54	20′-0″	10′-9″	17′-4″	15′-6″	19′-6″	27′-0″
800S162-68	12′-10″	11′-6″	18′-5″	16′-6″	20′-10″	18′-3″
800S162-97	14′-7″	12′-11″	20′-5″	18′-3″	22′-11″	20′-5″
1000S162-43	—	—	—	—	—	—
1000S162-54	12′-10″	11′-6″	18′-7″	16′-9″	21′-2″	15′-5″
1000S162-68	13′-8″	12′-3″	19′-8″	17′-8″	22′-4″	20′-1″
1000S162-97	15′-4″	13′-8″	21′-8″	19′-5″	24′-5″	21′-11″
1200S162-43	—	—	—	—	—	—
1200S162-54	—	—	—	—	—	—
1200S162-68	14′-4″	12′-11″	20′-9″	18′-8″	23′-7″	21′-3″
1200S162-97	16′-1″	14′-4″	22′-10″	20′-6″	25′-9″	23′-2″

For SI: 1 inch = 25.4 mm, 1 foot = 304.8 mm, 1 pound per square foot = 0.0479 kPa.

a. Deflection criterion: *L*/240 for total loads.

b. Ceiling dead load = 5 psf.

TABLE R804.3.1.1(8)
CEILING JOIST SPANS
TWO EQUAL SPANS WITHOUT BEARING STIFFENERS
20 PSF LIVE LOAD (LIMITED ATTIC STORAGE)[a, b] 33 KSI STEEL

MEMBER DESIGNATION	ALLOWABLE SPAN (feet-inches)					
	Lateral Support of Top (Compression) Flange					
	Unbraced		Mid-span Bracing		Third-point Bracing	
	Ceiling Joist Spacing (inches)					
	16	24	16	24	16	24
350S162-33	8′-1″	6′-1″	8′-1″	6′-1″	8′-1″	6′-1″
350S162-43	10′-7″	8′-1″	10′-7″	8′-1″	10′-7″	8′-1″
350S162-54	12′-8″	9′-10″	12′-8″	9′-10″	12′-8″	9′-10″
350S162-68	14′-7″	11′-10″	14′-11″	11′-10″	14′-11″	11′-10″
350S162-97	17′-6″	14′-3″	17′-6″	14′-3″	17′-6″	14′-3″
550S162-33	8′-11″	6′-8″	8′-11″	6′-8″	8′-11″	6′-8″
550S162-43	12′-3″	9′-2″	12′-3″	9′-2″	12′-3″	9′-2″
550S162-54	14′-11″	11′-8″	15′-4″	11′-8″	15′-4″	11′-8″
550S162-68	16′-3″	14′-5″	18′-0″	15′-8″	18′-10″	14′-7″
550S162-97	19′-1″	16′-10″	20′-3″	18′-0″	23′-9″	19′-5″
800S162-33	—	—	—	—	—	—
800S162-43	13′-11″	9′-10″	13′-11″	9′-10″	13′-11″	9′-10″
800S162-54	16′-5″	13′-9″	18′-8″	13′-9″	18′-8″	13′-9″
800S162-68	17′-9″	15′-11″	20′-0″	18′-0″	24′-1″	18′-3″
800S162-97	20′-8″	18′-3″	22′-3″	19′-11″	26′-9″	24′-0″
1000S162-43	—	—	—	—	—	—
1000S162-54	17′-6″	13′-11″	19′-1″	13′-11″	19′-1″	13′-11″
1000S162-68	18′-10″	16′-10″	21′-4″	19′-2″	25′-11″	19′-7″
1000S162-97	21′-8″	19′-3″	23′-7″	21′-2″	28′-5″	25′-6″
1200S162-43	—	—	—	—	—	—
1200S162-54	—	—	—	—	—	—
1200S162-68	19′-9″	17′-8″	22′-6″	19′-8″	26′-8″	19′-8″
1200S162-97	22′-7″	20′-1″	24′-10″	22′-3″	29′-11″	26′-11″

For SI: 1 inch = 25.4 mm, 1 foot = 304.8 mm, 1 pound per square foot = 0.0479 kPa.

a. Deflection criterion: *L*/240 for total loads.

b. Ceiling dead load = 5 psf.

TABLE R804.3.1.1(9)
NUMBER OF SCREWS REQUIRED FOR CEILING JOIST TO ROOF RAFTER CONNECTION[a]

ROOF SLOPE	NUMBER OF SCREWS																			
	Building width (feet)																			
	24				28				32				36				40			
	Ground snow load (psf)																			
	20	30	50	70	20	30	50	70	20	30	50	70	20	30	50	70	20	30	50	70
3/12	5	6	9	11	5	7	10	13	6	8	11	15	7	8	13	17	8	9	14	19
4/12	4	5	7	9	4	5	8	10	5	6	9	12	5	7	10	13	6	7	11	14
5/12	3	4	6	7	4	4	6	8	4	5	7	10	5	5	8	11	5	6	9	12
6/12	3	3	5	6	3	4	6	7	4	4	6	8	4	5	7	9	4	5	8	10
7/12	3	3	4	6	3	3	5	7	3	4	6	7	4	4	6	8	4	5	7	9
8/12	2	3	4	5	3	3	5	6	3	4	5	7	3	4	6	8	4	4	6	8
9/12	2	3	4	5	3	3	4	6	3	3	5	6	3	4	5	7	3	4	6	8
10/12	2	2	4	5	2	3	4	5	3	3	5	6	3	3	5	7	3	4	6	7
11/12	2	2	3	4	2	3	4	5	3	3	4	6	3	3	5	6	3	4	5	7
12/12	2	2	3	4	2	3	4	5	2	3	4	5	3	3	5	6	3	4	5	7

For SI: 1 inch = 25.4 mm, 1 foot = 304.8 mm, 1 pound per square foot = 0.0479kPa.
a. Screws shall be No. 10.

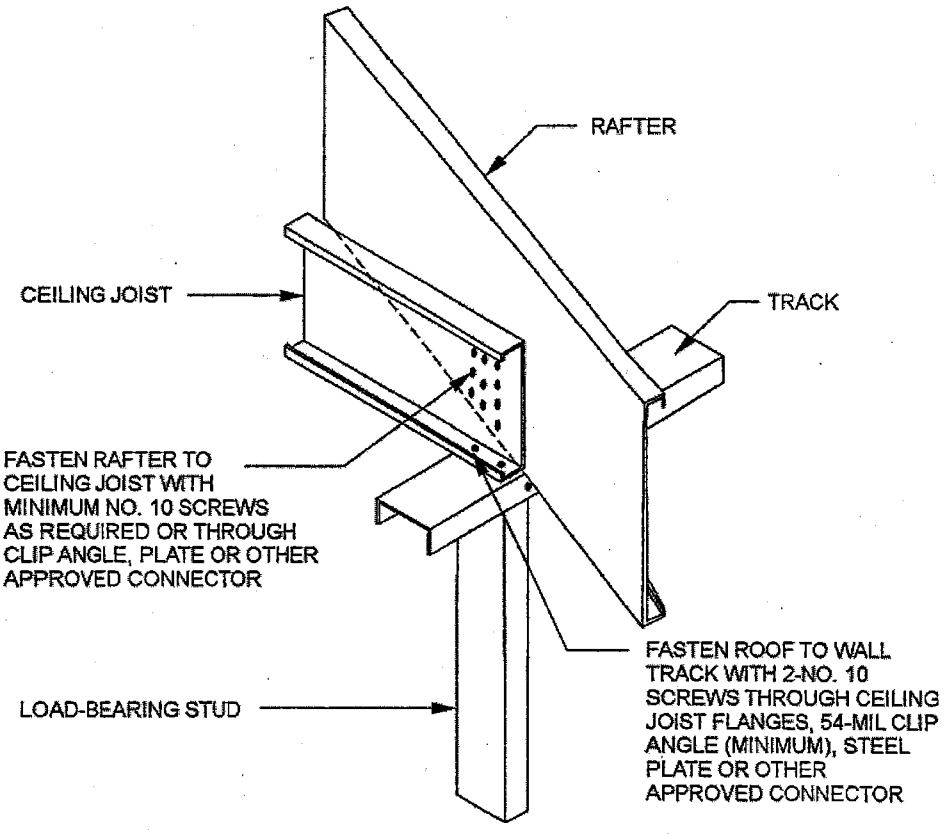

For SI: 1 mil = 0.0254 mm.

FIGURE R804.3.1.1(1)
JOIST TO RAFTER CONNECTION

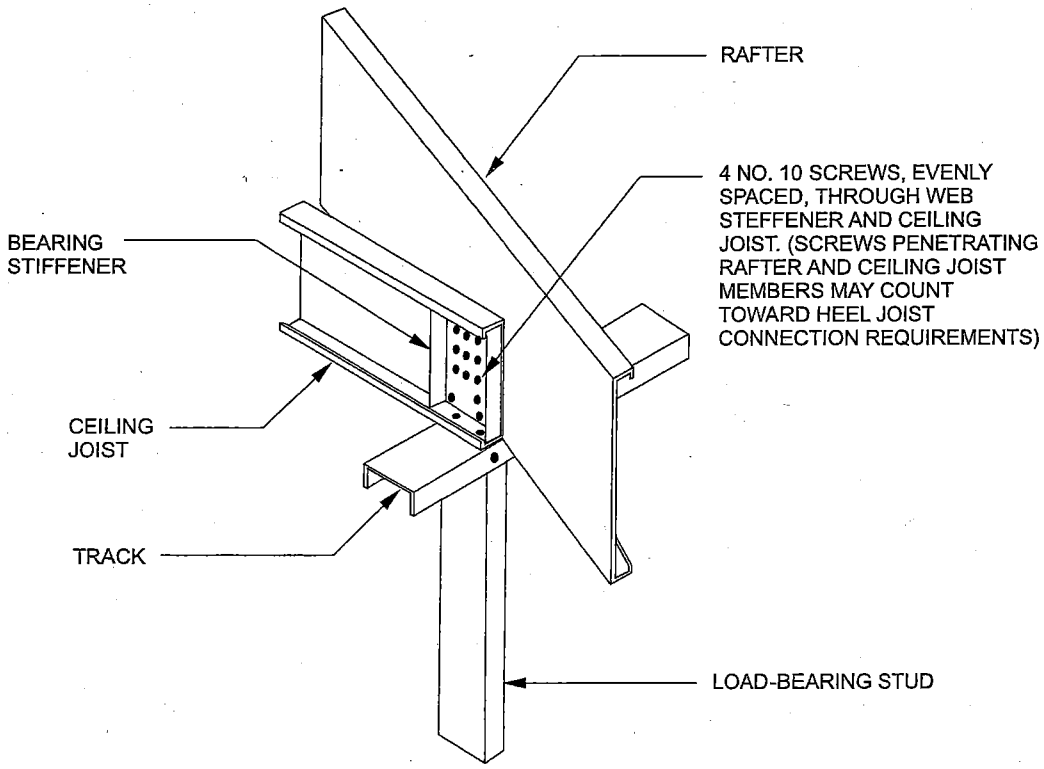

FIGURE R804.3.1.1(2)
BEARING STIFFENER

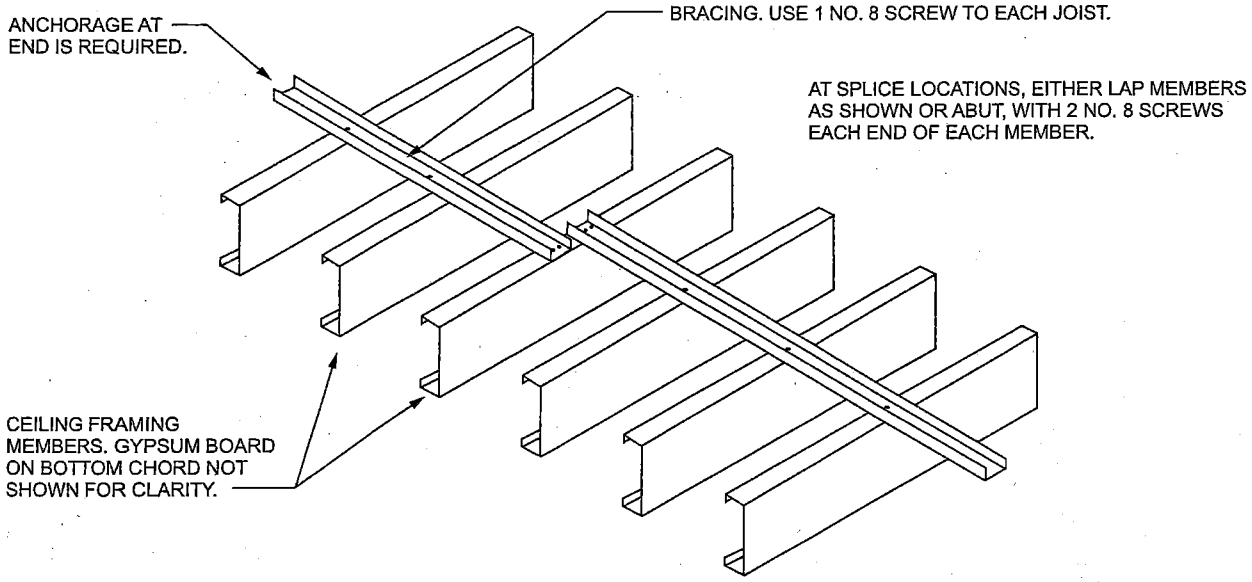

FIGURE R804.3.1.4(1)
CEILING JOIST TOP FLANGE BRACING WITH C-SHAPE, TRACK OR COLD-ROLLED CHANNEL

R804.3.1.3 Ceiling joist bottom flange bracing. The bottom flanges of ceiling joists shall be laterally braced by the application of gypsum board or continuous steel straps installed perpendicular to the joist run in accordance with one of the following:

1. Gypsum board shall be fastened with No. 6 screws in accordance with Section R702.
2. Steel straps with a minimum size of $1^1/_2$ inches by 33 mils (38 mm by 0.84 mm) shall be installed at a maximum spacing of 4 feet (1219 mm). Straps shall be fastened to the bottom flange at each joist with one No. 8 screw and shall be fastened to blocking with two No. 8 screws. Blocking shall be installed between joists at a maximum spacing of 12 feet (3658 mm) measured along a line of continuous strapping (perpendicular to the joist run). Blocking shall also be located at the termination of all straps.

R804.3.1.4 Ceiling joist top flange bracing. The top flanges of ceiling joists shall be laterally braced as required by Tables R804.3.1.1(1) through R804.3.1.1(8), in accordance with one of the following:

1. Minimum 33-mil (0.84 mm) C-shaped member in accordance with Figure R804.3.1.4(1).
2. Minimum 33-mil (0.84 mm) track section in accordance with Figure R804.3.1.4(1).
3. Minimum 33-mil (0.84 mm) hat section in accordance with Figure R804.3.1.4(1).
4. Minimum 54-mil (1.37 mm) $1^1/_2$-inch cold-rolled channel section in accordance with Figure R804.3.1.4(1).
5. Minimum $1^1/_2$-inch by 33-mil (38 mm by 0.84 mm) continuous steel strap in accordance with Figure R804.3.1.4(2).

Lateral bracing shall be installed perpendicular to the ceiling joists and shall be fastened to the top flange of each joist with one No. 8 screw. Blocking shall be installed between joists in line with bracing at a maximum spacing of 12 feet (3658 mm) measured perpendicular to the joists. Ends of lateral bracing shall be attached to blocking or anchored to a stable building component with two No. 8 screws.

R804.3.1.5 Ceiling joist splicing. Splices in ceiling joists shall be permitted, if ceiling joist splices are supported at interior bearing points and are constructed in accordance with Figure R804.3.1.5. The number of screws on each side of the splice shall be the same as required for the heel joint connection in Table R804.3.1.1(9).

R804.3.2 Roof rafters. Cold-formed steel roof rafters shall be in accordance with this section.

R804.3.2.1 Minimum roof rafter sizes. Roof rafter size and thickness shall be determined in accordance with the limits set forth in Tables R804.3.2.1(1) and R804.3.2.1(2) based on the horizontal projection of the roof rafter span. For determination of roof rafter sizes, reduction of roof spans shall be permitted when a roof rafter support brace is installed in accordance with Section R804.3.2.2. The reduced roof rafter span shall be taken as the larger of the distance from the roof rafter support brace to the ridge or to the heel measured horizontally.

For the purpose of determining roof rafter sizes in Tables R804.3.2.1(1) and R804.3.2.1(2), wind speeds shall be converted to equivalent ground snow loads in accordance with Table R804.3.2.1(3). Roof rafter sizes shall be based on the higher of the ground snow load or the equivalent snow load converted from the wind speed.

R804.3.2.1.1 Eave overhang. Eave overhangs shall not exceed 24 inches (610 mm) measured horizontally.

R804.3.2.1.2 Rake overhangs. Rake overhangs shall not exceed 12 inches (305 mm) measured horizontally. Outlookers at gable endwalls shall be installed in accordance with Figure R804.3.2.1.2.

R804.3.2.2 Roof rafter support brace. When used to reduce roof rafter spans in determining roof rafter sizes, a roof rafter support brace shall meet all of the following conditions:

1. Minimum 350S162-33 C-shaped brace member with maximum length of 8 feet (2438 mm).
2. Minimum brace member slope of 45 degrees (0.785 rad) to the horizontal.
3. Minimum connection of brace to a roof rafter and ceiling joist with four No.10 screws at each end.
4. Maximum 6 inches (152 mm) between brace/ ceiling joist connection and load-bearing wall below.
5. Each roof rafter support brace greater than 4 feet (1219 mm) in length, shall be braced with a supplemental brace having a minimum size of 350S162-33 or 350T162-33 such that the maximum unsupported length of the roof rafter support brace is 4 feet (1219 mm). The supplemental brace shall be continuous and shall be connected to each roof rafter support brace using two No.8 screws.

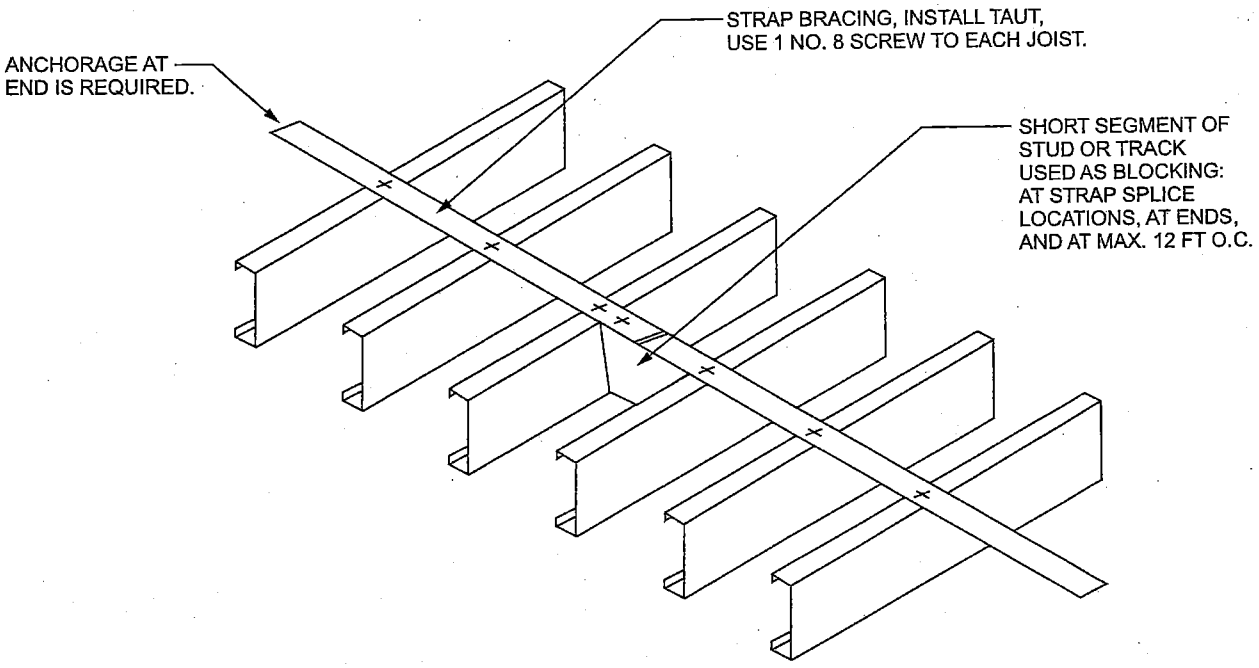

For SI: 1 foot = 304.8 mm.

FIGURE R804.3.1.4(2)
CEILING JOIST TOP FLANGE BRACING WITH CONTINUOUS STEEL STRAP AND BLOCKING

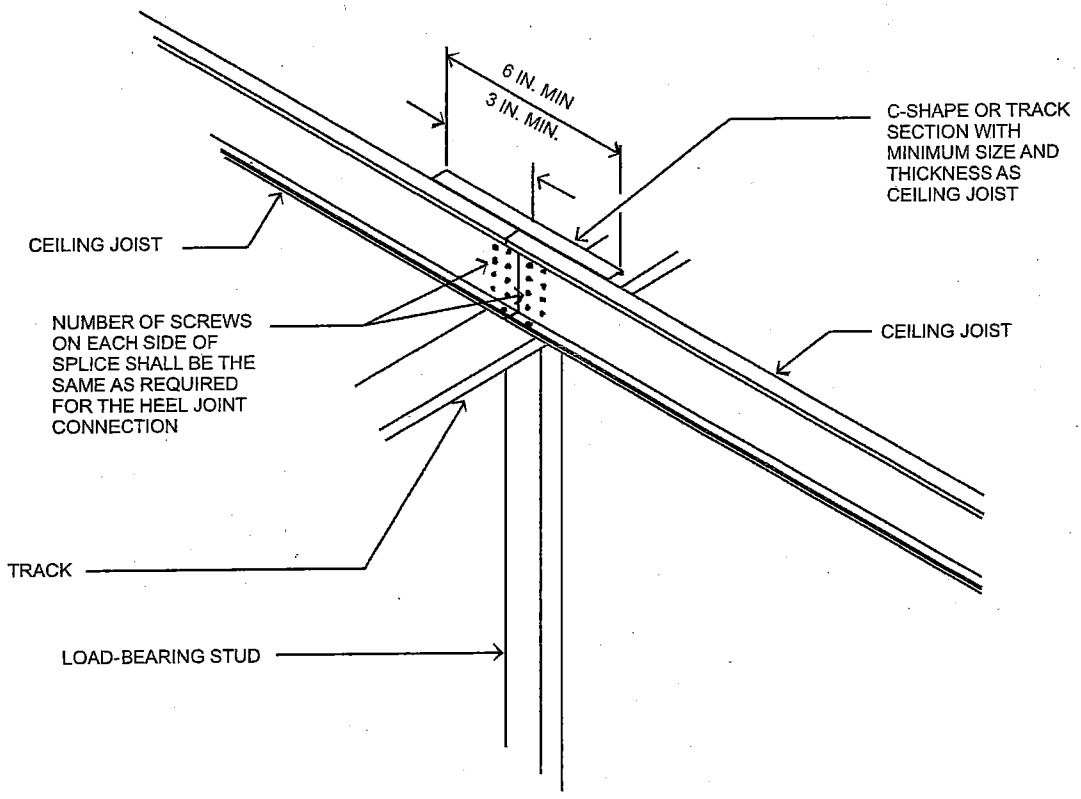

For SI: 1 inch = 25.4 mm.

FIGURE R804.3.1.5
SPLICED CEILING JOISTS

TABLE R804.3.2.1(1)
ROOF RAFTER SPANS[a, b, c]
33 KSI STEEL

MEMBER DESIGNATION	ALLOWABLE SPAN MEASURED HORIZONTALLY (feet-inches)							
	Ground snow load (psf)							
	20		30		50		70	
	Rafter spacing (inches)							
	16	24	16	24	16	24	16	24
550S162-33	14′-0″	11′-6″	11′-11″	9′-7″	9′-6″	7′-9″	8′-2″	6′-8″
550S162-43	16′-8″	13′-11″	14′-5″	11′-9″	11′-6″	9′-5″	9′-10″	8′-0″
550S162-54	17′-11″	15′-7″	15′-7″	13′-3″	12′-11″	10′-7″	11′-1″	9′-1″
550S162-68	19′-2″	16′-9″	16′-9″	14′-7″	14′-1″	11′-10″	12′-6″	10′-2″
550S162-97	21′-3″	18′-6″	18′-6″	16′-2″	15′-8″	13′-8″	14′-0″	12′-2″
800S162-33	16′-5″	13′-5″	13′-11″	11′-4″	11′-1″	8′-2″	9′-0″	6′-0″
800S162-43	19′-9″	16′-1″	16′-8″	13′-7″	13′-4″	10′-10″	11′-5″	9′-4″
800S162-54	22′-8″	18′-6″	19′-2″	15′-8″	15′-4″	12′-6″	13′-1″	10′-8″
800S162-68	25′-10″	21′-2″	21′-11″	17′-10″	17′-6″	14′-4″	15′-0″	12′-3″
800S162-97	21′-3″	18′-6″	18′-6″	16′-2″	15′-8″	13′-8″	14′-0″	12′-2″
1000S162-43	22′-3″	18′-2″	18′-9″	15′-8″	15′-0″	12′-3″	12′-10″	10′-6″
1000S162-54	25′-8″	20′-11″	21′-8″	17′-9″	17′-4″	14′-2″	14′-10″	12′-1″
1000S162-68	29′-7″	24′-2″	25′-0″	20′-5″	20′-0″	16′-4″	17′-2″	14′-0″
1000S162-97	34′-8″	30′-4″	30′-4″	25′-10″	25′-3″	20′-8″	21′-8″	17′-8″
1200S162-54	28′-3″	23′-1″	23′-11″	19′-7″	19′-2″	15′-7″	16′-5″	13′-5″
1200S162-68	32′-10″	26′-10″	27′-9″	22′-8″	22′-2″	18′-1″	19′-0″	15′-6″
1200S162-97	40′-6″	33′-5″	34′-6″	28′-3″	27′-7″	22′-7″	23′-8″	19′-4″

For SI: 1 inch = 25.4 mm, 1 foot = 304.8 mm, 1 pound per square foot = 0.0479 kPa.

a. Table provides maximum horizontal rafter spans in feet and inches for slopes between 3:12 and 12:12.

b. Deflection criterion: *L*/240 for live loads and *L*/180 for total loads.

c. Roof dead load = 12 psf.

TABLE R804.3.2.1(2)
ROOF RAFTER SPANS[a, b, c]
50 KSI STEEL

MEMBER DESIGNATION	ALLOWABLE SPAN MEASURED HORIZONTALLY (feet-inches)							
	Equivalent ground snow load (psf)							
	20		30		50		70	
	Rafter spacing (inches)							
	16	24	16	24	16	24	16	24
550S162-33	15′-4″	12′-11″	13′-4″	10′-11″	10′-9″	8′-9″	9′-2″	7′-6″
550S162-43	16′-8″	14′-7″	14′-7″	12′-9″	12′-3″	10′-6″	11′-0″	9′-0″
550S162-54	17′-11″	15′-7″	15′-7″	13′-8″	13′-2″	11′-6″	11′-9″	10′-3″
550S162-68	19′-2″	16′-9″	16′-9″	14′-7″	14′-1″	12′-4″	12′-7″	11′-0″
550S162-97	21′-3″	18′-6″	18′-6″	16′-2″	15′-8″	13′-8″	14′-0″	12′-3″
800S162-33	18′-10″	15′-5″	15′-11″	12′-9″	12′-3″	8′-2″	9′-0″	6′-0″
800S162-43	22′-3″	18′-2″	18′-10″	15′-5″	15′-1″	12′-3″	12′-11″	10′-6″
800S162-54	24′-2″	21′-2″	21′-1″	18′-5″	17′-10″	14′-8″	15′-5″	12′-7″
800S162-68	25′-11″	22′-8″	22′-8″	19′-9″	19′-1″	16′-8″	17′-1″	14′-9″
800S162-97	28′-10″	25′-2″	25′-2″	22′-0″	21′-2″	18′-6″	19′-0″	16′-7″
1000S162-43	25′-2″	20′-7″	21′-4″	17′-5″	17′-0″	13′-11″	14′-7″	10′-7″
1000S162-54	29′-0″	24′-6″	25′-4″	20′-9″	20′-3″	16′-7″	17′-5″	14′-2″
1000S162-68	31′-2″	27′-3″	27′-3″	23′-9″	20′-0″	19′-6″	20′-6″	16′-8″
1000S162-97	34′-8″	30′-4″	30′-4″	26′-5″	25′-7″	22′-4″	22′-10″	20′-0″
1200S162-54	33′-2″	27′-1″	28′-1″	22′-11″	22′-5″	18′-4″	19′-3″	15′-8″
1200S162-68	36′-4″	31′-9″	31′-9″	27′-0″	26′-5″	21′-6″	22′-6″	18′-6″
1200S162-97	40′-6″	35′-4″	35′-4″	30′-11″	29′-10″	26′-1″	26′-8″	23′-1″

For SI: 1 inch = 25.4 mm, 1 foot = 304.8 mm, 1 pound per square foot = 0.0479 kPa.

a. Table provides maximum horizontal rafter spans in feet and inches for slopes between 3:12 and 12:12.

b. Deflection criterion: *L*/240 for live loads and *L*/180 for total loads.

c. Roof dead load = 12 psf.

TABLE R804.3.2.1(3)
BASIC WIND SPEED TO EQUIVALENT SNOW LOAD CONVERSION

BASIC WIND SPEED AND EXPOSURE		EQUIVALENT GROUND SNOW LOAD (psf)									
		Roof slope									
Exp. B	Exp. C	3:12	4:12	5:12	6:12	7:12	8:12	9:12	10:12	11:12	12:12
85 mph	—	20	20	20	20	20	20	30	30	30	30
100 mph	85 mph	20	20	20	20	30	30	30	30	50	50
110 mph	100 mph	20	20	20	20	30	50	50	50	50	50
—	110 mph	30	30	30	50	50	50	70	70	70	—

For SI: 1 mile per hour = 0.447 m/s, 1 pound per square foot = 0.0479 kPa.

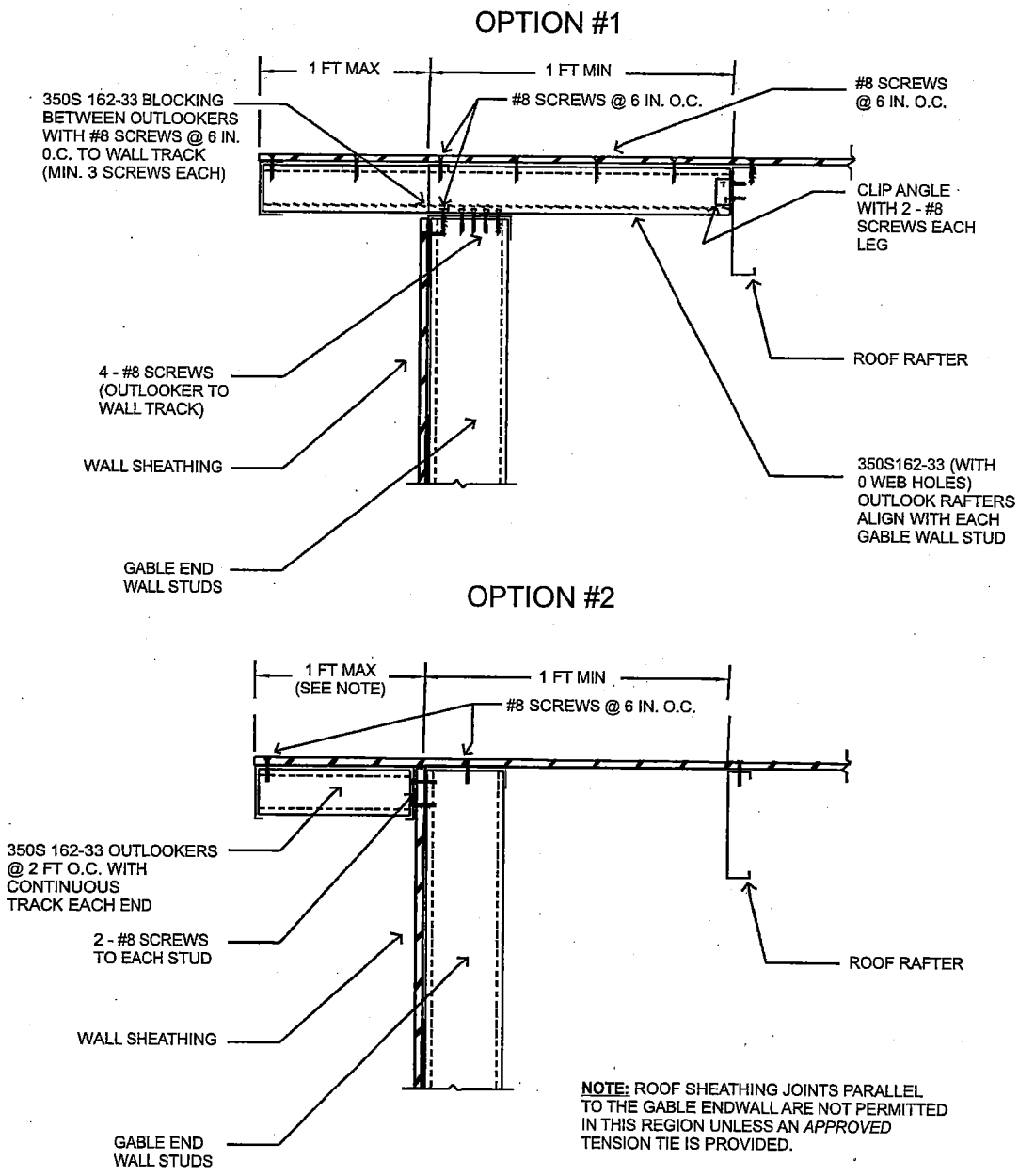

For SI: 1 inch = 25.4 mm, 1 foot = 304.8 mm.

FIGURE R804.3.2.1.2
GABLE ENDWALL OVERHANG DETAILS

R804.3.2.3 Roof rafter splice. Roof rafters shall not be spliced.

R804.3.2.4 Roof rafter to ceiling joist and ridge member connection. Roof rafters shall be connected to a parallel ceiling joist to form a continuous tie between exterior walls in accordance with Figure R804.3.1.1(1) or R804.3.1.1(2) and Table R804.3.1.1(9). Ceiling joists shall be connected to the top track of the load-bearing wall in accordance with Table R804.3, either with two No. 10 screws applied through the flange of the ceiling joist or by using a 54-mil (1.37 mm) clip angle with two No.10 screws in each leg. Roof rafters shall be connected to a ridge member with a minimum 2-inch by 2-inch (51 mm by 51 mm) clip angle fastened with No. 10 screws to the ridge member in accordance with Figure R804.3.2.4 and Table R804.3.2.4. The clip angle shall have a steel thickness equivalent to or greater than the roof rafter thickness and shall extend the depth of the roof rafter member to the extent possible. The ridge member shall be fabricated from a C-shaped member and a track section, which shall have a minimum size and steel thickness equivalent to or greater than that of adjacent roof rafters and shall be installed in accordance with Figure R804.3.2.4. The ridge member shall extend the full depth of the sloped roof rafter cut.

R804.3.2.5 Roof rafter bottom flange bracing. The bottom flanges of roof rafters shall be continuously braced, at a maximum spacing of 8 feet (2440 mm) as measured parallel to the roof rafters, with one of the following members:

1. Minimum 33-mil (0.84 mm) C-shaped member.
2. Minimum 33-mil (0.84 mm) track section.
3. Minimum $1^1/_2$-inch by 33-mil (38 mm by 0.84 mm) steel strap.

The bracing element shall be fastened to the bottom flange of each roof rafter with one No. 8 screw and

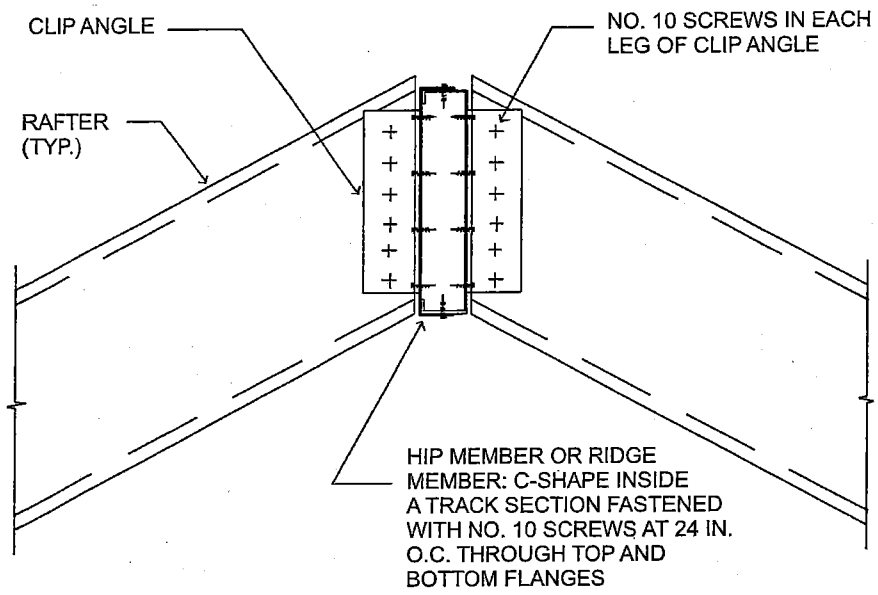

For SI: 1 inch = 25.4 mm.

FIGURE R804.3.2.4
HIP MEMBER OR RIDGE MEMBER CONNECTION

TABLE R804.3.2.4
SCREWS REQUIRED AT EACH LEG OF CLIP ANGLE FOR HIP RAFTER TO HIP MEMBER OR ROOF RAFTER TO RIDGE MEMBER CONNECTION[a]

BUILDING WIDTH (feet)	NUMBER OF SCREWS			
	Ground snow load (psf)			
	0 to 20	21 to 30	31 to 50	51 to 70
24	2	2	3	4
28	2	3	4	5
32	2	3	4	5
36	3	3	5	6
40	3	4	5	7

For SI: 1 inch = 25.4 mm, 1 foot = 304.8 mm, 1 pound per square foot = 0.0479 kPa.
a. Screws shall be No. 10 minimum.

shall be fastened to blocking with two No. 8 screws. Blocking shall be installed between roof rafters in-line with the continuous bracing at a maximum spacing of 12 feet (3658 mm) measured perpendicular to the roof rafters. The ends of continuous bracing shall be fastened to blocking or anchored to a stable building component with two No. 8 screws.

R804.3.3 Hip framing. Hip framing shall consist of jack-rafters, hip members, hip support columns and connections in accordance with this section, or shall be in accordance with an approved design. The provisions of this section for hip members and hip support columns shall apply only where the jack rafter slope is greater than or equal to the roof slope. For the purposes of determining member sizes in this section, wind speeds shall be converted to equivalent ground snow load in accordance with Table R804.3.2.1(3).

R804.3.3.1 Jack rafters. Jack rafters shall meet the requirements for roof rafters in accordance with Section R804.3.2, except that the requirements in Section R804.3.2.4 shall not apply.

R804.3.3.2 Hip members. Hip members shall be fabricated from C-shape members and track section, which shall have minimum sizes determined in accordance with Table R804.3.3.2. The C-shape member and track section shall be connected at a maximum spacing of 24 inches (610 mm) using No. 10 screws through top and bottom flanges in accordance with Figure R804.3.2.4. The depth of the hip member shall match that of the roof rafters and jack rafters, or shall be based on an approved design for a beam pocket at the corner of the supporting wall.

R804.3.3.3 Hip support columns. Hip support columns shall be used to support hip members at the ridge. A hip support column shall consist of a pair of C-shape members, with a minimum size determined in accordance with Table R804.3.3.3. The C-shape members shall be connected at a maximum spacing of 24 inches (610 mm) on center to form a box using minimum 3-inch by 33-mil (76 mm by 0.84 mm) strap connected to each of the flanges of the C-shape members with three-No. 10 screws. Hip support columns shall have a continuous load path to the foundation and shall be supported at the ceiling line by an interior wall or by an approved design for a supporting element.

TABLE R804.3.3.2
HIP MEMBER SIZES, 33 ksi STEEL

BUILDING WIDTH (feet)	HIP MEMBER DESIGNATION[a]			
	Equivalent ground snow load (psf)			
	0 to 20	21 to 30	31 to 50	51 to 70
24	800S162-68 800T150-68	800S162-68 800T150-68	800S162-97 800T150-97	1000S162-97 1000T150-97
28	1000S162-68 1000T150-68	1000S162-68 1000T150-68	1000S162-97 1000T150-97	1200S162-97 1200T150-97
32	1000S162-97 1000T150-97	1000S162-97 1000T150-97	1200S162-97 1200T150-97	—
36	1200S162-97 1200T150-97	—	—	—
40	—	—	—	—

For SI: 1 foot = 304.8 mm, 1 pound per square foot = 0.0479 kPa.

a. The web depth of the roof rafters and jack rafters is to match at the hip or they shall be installed in accordance with an approved design.

TABLE R804.3.3.3
HIP SUPPORT COLUMN SIZES

BUILDING WIDTH (feet)	HIP SUPPORT COLUMN DESIGNATION[a, b]			
	Equivalent ground snow load (psf)			
	0 to 20	21 to 30	31 to 50	51 to 70
24	2-350S162-33	2-350S162-33	2-350S162-43	2-350S162-54
28	2-350S162-54	2-550S162-54	2-550S162-68	2-550S162-68
32	2-550S162-68	2-550S162-68	2-550S162-97	—
36	2-550S162-97	—	—	—
40	—	—	—	—

For SI: 1 foot = 304.8 mm, 1 pound per square foot = 0.0479 kPa.

a. Box shape column only in accordance with Figure R804.3.3.4(2).

b. 33-ksi steel for 33- and 43-mil material; 50-ksi steel for thicker material.

R804.3.3.4 Hip framing connections. Hip rafter framing connections shall be installed in accordance with the following:

1. Jack rafters shall be connected at the eave to a parallel C-shape blocking member in accordance with Figure R804.3.3.4(1). The C-shape blocking member shall be attached to the supporting wall track with minimum two No. 10 screws.
2. Jack rafters shall be connected to a hip member with a minimum 2-inch by 2-inch (51 mm by 51 mm) clip angle fastened with No.10 screws to the hip member in accordance with Figure R804.3.2.4 and Table R804.3.2.4. The clip angle shall have a steel thickness equivalent to or greater than the jack rafter thickness and shall extend the depth of the jack rafter member to the extent possible.
3. The connection of the hip support columns at the ceiling line shall be in accordance with Figure R804.3.3.4(2), with an uplift strap sized in accordance with Table R804.3.3.4(1).
4. The connection of hip support members, ridge members and hip support columns at the ridge shall be in accordance with Figures R804.3.3.4(3) and R804.3.3.4(4) and Table R804.3.3.4(2).
5. The connection of hip members to the wall corner shall be in accordance with Figure R804.3.3.4(5) and Table R804.3.3.4(3).

R804.3.4 Cutting and notching. Flanges and lips of load-bearing, cold-formed steel roof framing members shall not be cut or notched.

R804.3.5 Headers. Roof-ceiling framing above wall openings shall be supported on headers. The allowable spans for headers in load-bearing walls shall not exceed the values set forth in Section R603.6 and Tables R603.6(1) through R603.6(24).

R804.3.6 Framing of openings in roofs and ceilings. Openings in roofs and ceilings shall be framed with header and trimmer joists. Header joist spans shall not exceed 4 feet (1219 mm) in length. Header and trimmer joists shall be fabricated from joist and track members having a minimum size and thickness at least equivalent to the adjacent ceiling joists or roof rafters and shall be installed in accordance with Figures R804.3.6(1) and R804.3.6(2). Each header joist shall be connected to trimmer joists with a minimum of four 2-inch by 2-inch (51 by 51 mm) clip angles. Each clip angle shall be fastened to both the header and trimmer joists with four No. 8 screws, evenly spaced, through each leg of the clip angle. The steel thickness of the clip angles shall be not less than that of the ceiling joist or roof rafter. Each track section for a built-up header or trimmer joist shall extend the full length of the joist (continuous).

R804.3.7 Roof trusses. Cold-formed steel trusses shall be designed and installed in accordance with AISI S100, Section D4. In the absence of specific bracing requirements, trusses shall be braced in accordance with accepted industry practices, such as the SBCA *Cold-Formed Steel Building Component Safety Information (CFSBCSI) Guide to Good Practice for Handling, Installing & Bracing of Cold-Formed Steel Trusses*. Trusses shall be connected to the top track of the load-bearing wall in accordance with Table R804.3, either with two No. 10 screws applied through the flange of the truss or by using a 54-mil (1.37 mm) clip angle with two No. 10 screws in each leg.

R804.3.8 Ceiling and roof diaphragms. Ceiling and roof diaphragms shall be in accordance with this section.

R804.3.8.1 Ceiling diaphragms. At gable endwalls a ceiling diaphragm shall be provided by attaching a minimum $^1/_2$-inch (12.7 mm) gypsum board in accordance with Tables R804.3.8(1) and R804.3.8(2) or a minimum $^3/_8$-inch (9.5 mm) wood structural panel sheathing, which complies with Section R803, in accordance with Table R804.3.8(3) to the bottom of ceiling joists or roof trusses and connected to wall framing in accordance with Figures R804.3.8(1) and R804.3.8(2), unless studs are designed as full height without bracing at the ceiling. Flat blocking shall consist of C-shape or track section with a minimum thickness of 33 mils (0.84 mm).

The ceiling diaphragm shall be secured with screws spaced at a maximum 6 inches (152 mm) o.c. at panel edges and a maximum 12 inches (305 mm) o.c. in the field. Multiplying the required lengths in Tables R804.3.8(1) and R804.3.8(2) for gypsum board sheathed ceiling diaphragms shall be permitted to be multiplied by 0.35 shall be permitted if all panel edges are blocked. Multiplying the required lengths in Tables R804.3.8(1) and R804.3.8(2) for gypsum board sheathed ceiling diaphragms by 0.9 shall be permitted if all panel edges are secured with screws spaced at 4 inches (102 mm) o.c.

R804.3.8.2 Roof diaphragm. A roof diaphragm shall be provided by attaching a minimum of $^3/_8$-inch (9.5 mm) wood structural panel which complies with Section R803 to roof rafters or truss top chords in accordance with Table R804.3. Buildings with 3:1 or larger plan aspect ratio and with roof rafter slope (pitch) of 9:12 or larger shall have the roof rafters and ceiling joists blocked in accordance with Figure R804.3.8(3).

R804.3.9 Roof tie-down. Roof assemblies subject to wind uplift pressures of 20 pounds per square foot (0.96 kPa) or greater, as established in Table R301.2(2), shall have rafter-to-bearing wall ties provided in accordance with Table R802.11.

TABLE R804.3.3.4(1)
UPLIFT STRAP CONNECTION REQUIREMENTS HIP SUPPORT COLUMN AT CEILING LINE

BUILDING WIDTH (feet)	BASIC WIND SPEED (mph) EXPOSURE B				
	85	100	110	—	—
	BASIC WIND SPEED (mph) EXPOSURE C				
	—	85	—	100	110
	Number of No. 10 screws in each end of each 3-inch by 54-mil steel strap[a, b, c]				
24	3	4	4	6	7
28	4	6	6	8	10
32	5	8	8	11	13
36	7	10	11	14	17
40	—	—	—	—	—

For SI: 1 foot = 304.8 mm, 1 pound per square foot = 0.0479 kPa, 1 mil = 0.0254 mm.

a. Two straps are required, one each side of the column.

b. Space screws at $^3/_4$ inch on center and provide $^3/_4$-inch end distance.

c. 50-ksi steel strap.

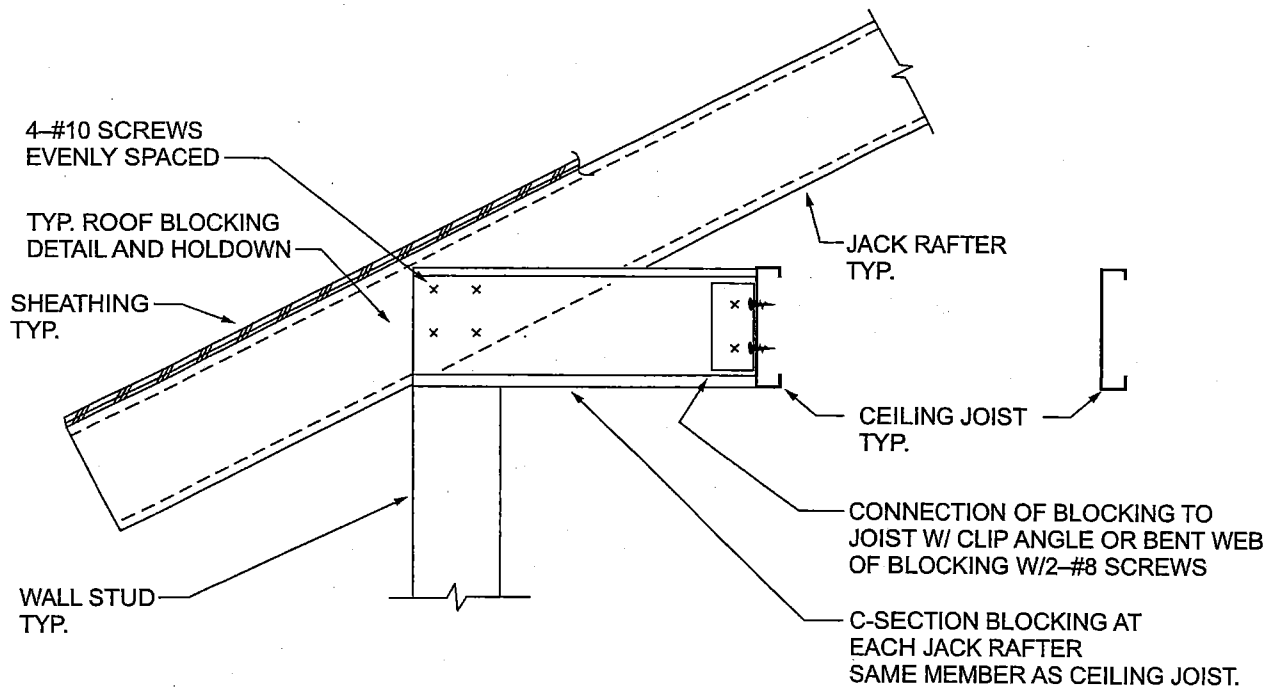

FIGURE R804.3.3.4(1)
JACK RAFTER CONNECTION AT EAVE

TABLE R804.3.3.4(2)
CONNECTION REQUIREMENTS HIP MEMBER TO HIP SUPPORT COLUMN

BUILDING WIDTH (feet)	NUMBER OF NO. 10 SCREWS IN EACH FRAMING ANGLE[a, b, c]			
	Equivalent ground snow load (psf)			
	0 to 20	21 to 30	31 to 50	51 to 70
24	10	10	10	12
28	10	10	14	18
32	10	12	—	—
36	14	—	—	—
40	—	—	—	—

For SI: 1 foot = 304.8 mm, 1 pound per square foot = 0.0479 kPa.

a. Screws to be divided equally between the connection to the hip member and the column. Refer to Figures R804.3.3.4(3) and R804.3.3.4(4).

b. The number of screws required in each framing angle is not to be less than shown in Table R804.3.3.4(1).

c. 50-ksi steel from the framing angle.

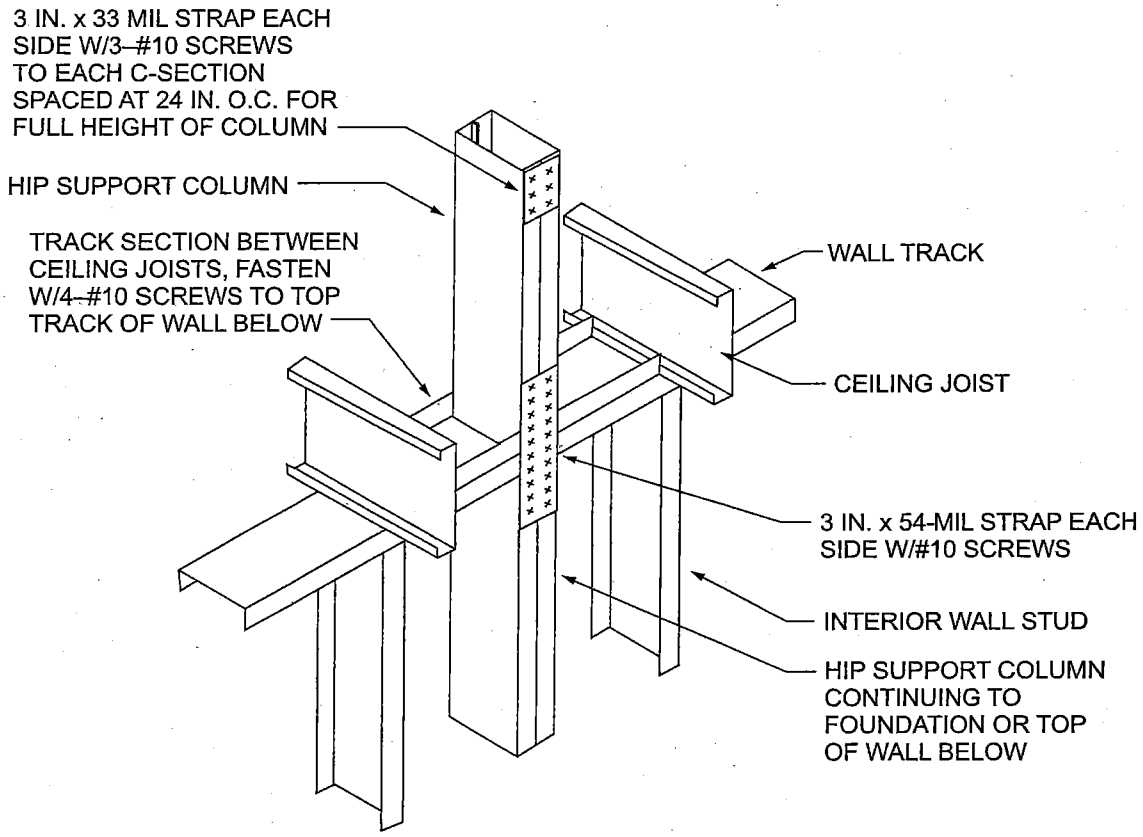

For SI: 1 inch = 25.4 mm, 1 mil = 0.0254 mm.

FIGURE R804.3.3.4(2)
HIP SUPPORT COLUMN

TABLE R804.3.3.4(3)
UPLIFT STRAP CONNECTION REQUIREMENTS HIP MEMBER TO WALL

BUILDING WIDTH (feet)	BASIC WIND SPEED (mph) EXPOSURE B				
	85	100	110	—	—
	BASIC WIND SPEED (mph) EXPOSURE C				
	—	85	—	100	110
	Number of No. 10 screws in each end of each 3-inch by 54-mil steel strap[a, b, c]				
24	2	2	3	3	4
28	2	3	3	4	5
32	3	4	4	6	7
36	3	5	5	7	8
40	—	—	—	—	—

For SI: 1 foot = 304.8 mm,1 pound per square foot = 0.0479 kPa.
a. Two straps are required, one each side of the column.
b. Space screws at $^3/_4$ inches on center and provide $^3/_4$-inch end distance.
c. 50-ksi steel strap.

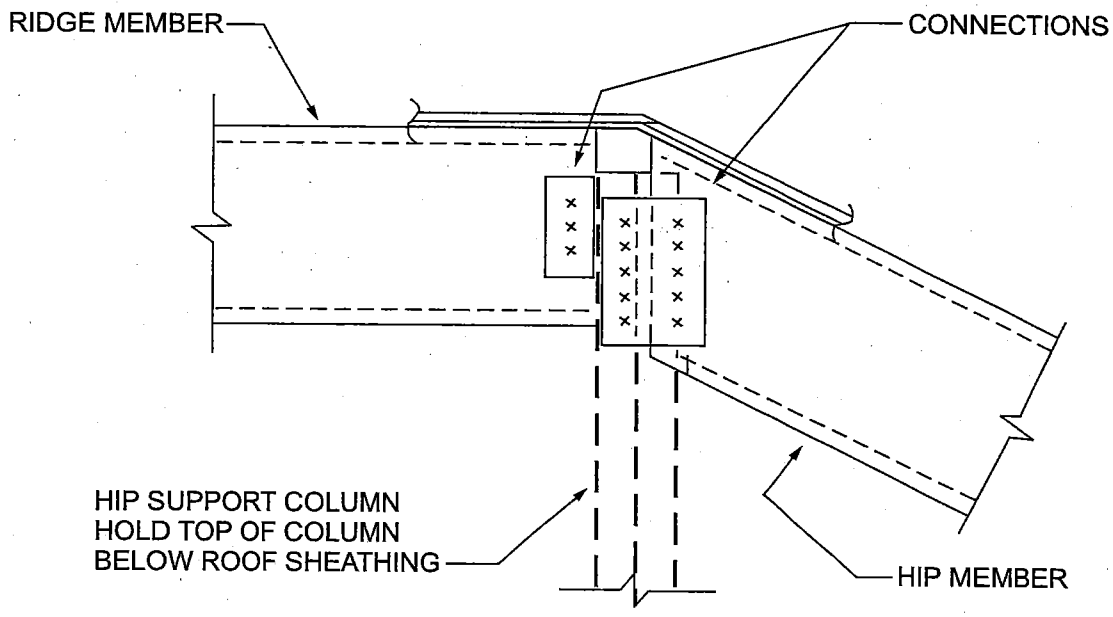

FIGURE R804.3.3.4(3)
HIP CONNECTIONS AT RIDGE

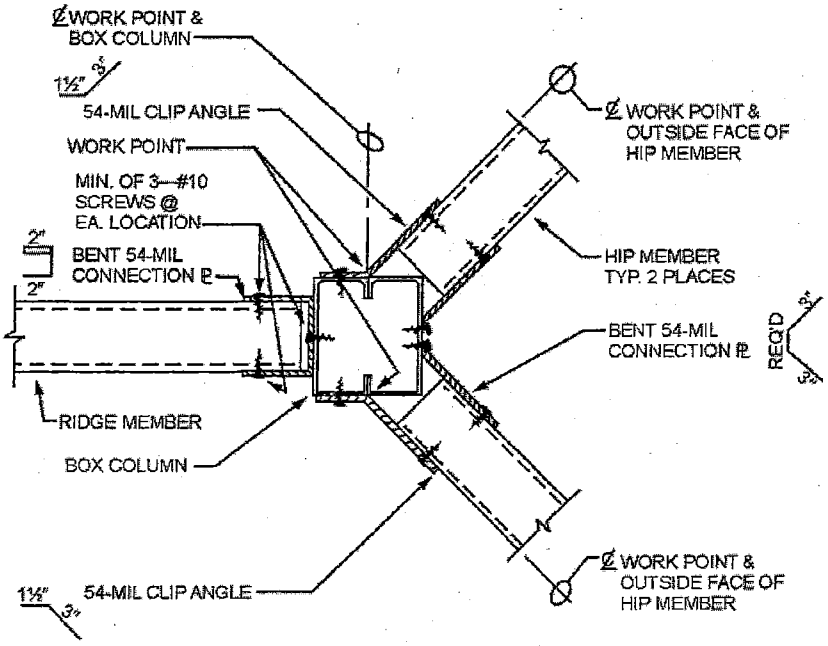

NOTE: RAFTERS NOT SHOWN FOR CLARITY

CONNECTION @ 3½" BOX COLUMN

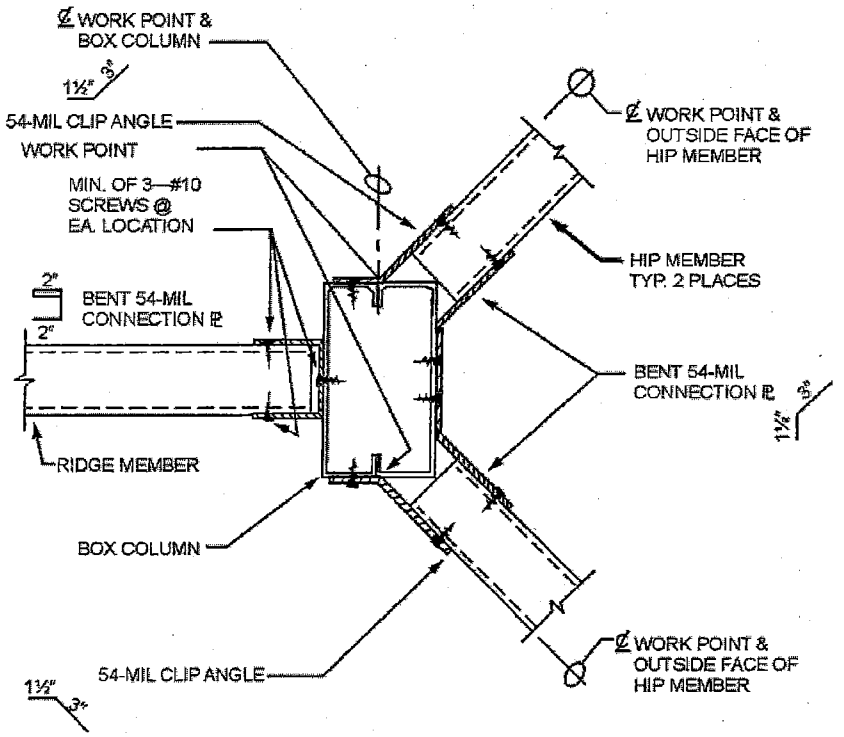

NOTE: RAFTERS NOT SHOWN FOR CLARITY

CONNECTION @ 5½" BOX COLUMN

For SI: 1 inch = 25.4 mm, 1 mil = 0.0254 mm.

FIGURE R804.3.3.4(4)
HIP CONNECTIONS AT RIDGE AND BOX COLUMN

4158

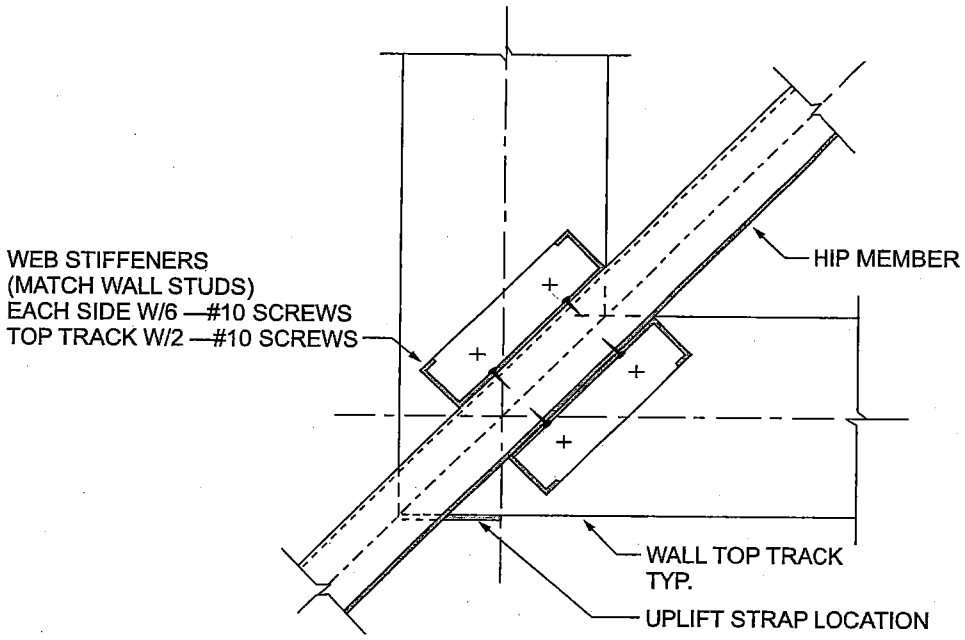

FIGURE R804.3.3.4(5)
HIP MEMBER CONNECTION AT WALL CORNER

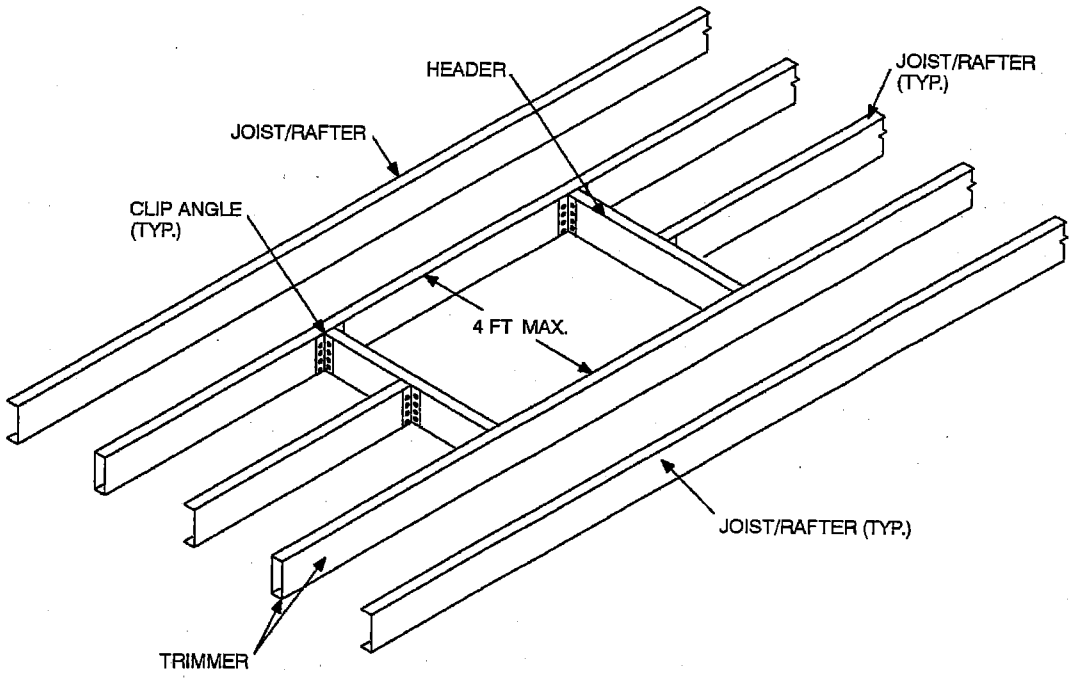

For SI: 1 foot = 304.8 mm.

FIGURE R804.3.6(1)
ROOF OR CEILING OPENING

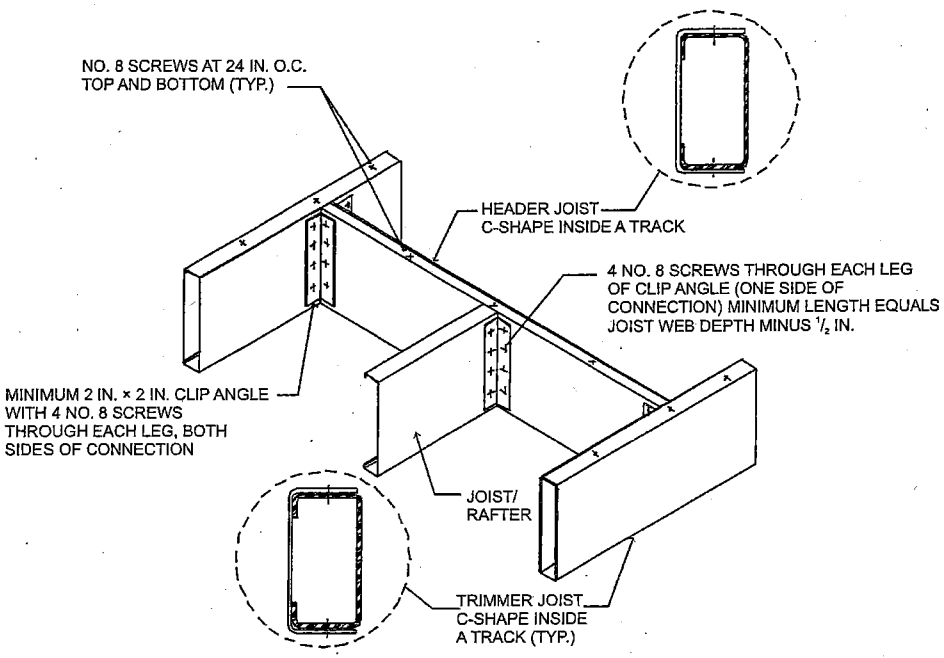

For SI: 1 inch = 25.4 mm.

FIGURE R804.3.6(2)
HEADER TO TRIMMER CONNECTION

TABLE R804.3.8(1)
REQUIRED LENGTHS FOR CEILING DIAPHRAGMS AT GABLE ENDWALLS GYPSUM BOARD SHEATHED, CEILING HEIGHT = 8 FEET[a, b, c, d, e, f]

Exposure B		BASIC WIND SPEED (mph)				
		85	100	110	—	—
Exposure C		—	85	—	100	110
Roof pitch	Building endwall width (feet)	Minimum diaphragm length (feet)				
3:12 to 6:12	24 - 28	14	20	22	28	32
	28 - 32	16	22	28	32	38
	32 - 36	20	26	32	38	44
	36 - 40	22	30	36	44	50
6:12 to 9:12	24 - 28	16	22	26	32	36
	28 - 32	20	26	32	38	44
	32 - 36	22	32	38	44	52
	36 - 40	26	36	44	52	60
9:12 to 12:12	24 - 28	18	26	30	36	42
	28 - 32	22	30	36	42	50
	32 - 36	26	36	42	50	60
	36 - 40	30	42	50	60	70

For SI: 1 inch = 25.4 mm, 1 pound per square foot = 0.0479 kPa, 1 mile per hour = 0.447 m/s, 1 foot = 304.8 mm, 1 mil = 0.0254 mm.

a. Ceiling diaphragm is composed of $^1/_2$-inch gypsum board (min. thickness) secured with screws spaced at 6 inches o.c. at panel edges and 12 inches o.c. infield. Use No. 8 screws (min.) when framing members have a designation thickness of 54 mils or less and No. 10 screws (min.) when framing members have a designation thickness greater than 54 mils.

b. Maximum aspect ratio (length/width) of diaphragms is 2:1.

c. Building width is in the direction of horizontal framing members supported by the wall studs.

d. Required diaphragm lengths are to be provided at each end of the structure.

e. Multiplying required diaphragm lengths by 0.35 is permitted if all panel edges are blocked.

f. Multiplying required diaphragm lengths by 0.9 is permitted if all panel edges are secured with screws spaced at 4 inches o.c.

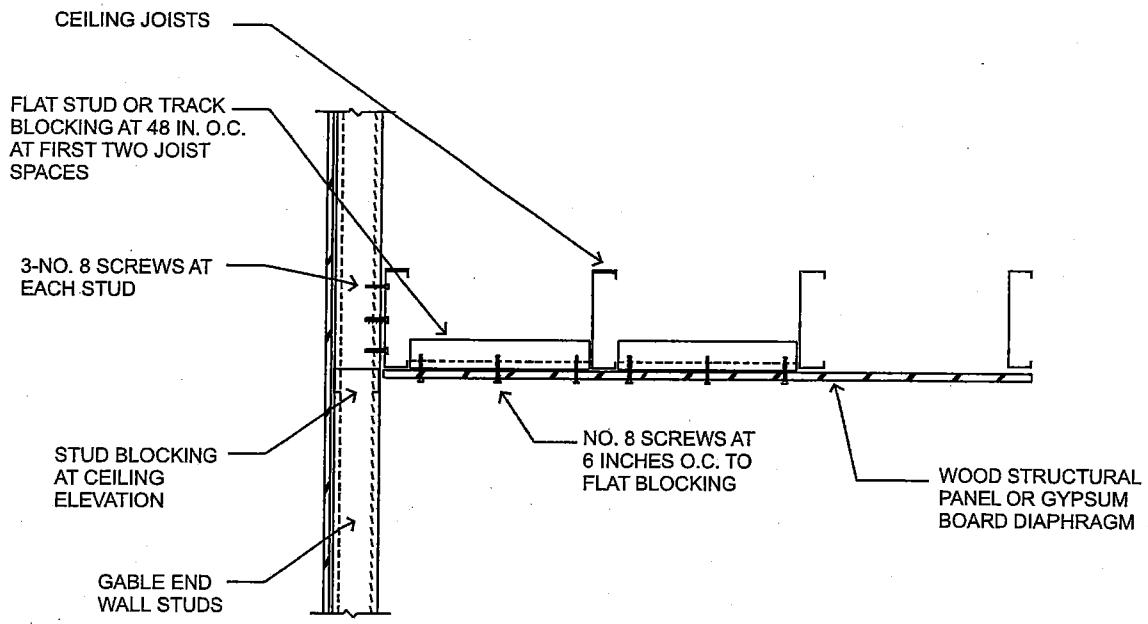

For SI: 1 inch = 25.4 mm.

FIGURE R804.3.8(1)
CEILING DIAPHRAGM TO GABLE ENDWALL DETAIL

TABLE R804.3.8(2)
REQUIRED LENGTHS FOR CEILING DIAPHRAGMS AT GABLE ENDWALLS GYPSUM BOARD SHEATHED CEILING HEIGHT = 9 OR 10 FEET[a, b, c, d, e, f]

Exposure B		BASIC WIND SPEED (mph)				
		85	100	110	—	—
Exposure C		—	85	—	100	110
Roof pitch	Building endwall width (feet)	Minimum diaphragm length (feet)				
3:12 to 6:12	24 - 28	16	22	26	32	38
	28 - 32	20	26	32	38	44
	32 - 36	22	30	36	44	50
	36 - 40	26	36	42	50	58
6:12 to 9:12	24 - 28	18	26	30	36	42
	28 - 32	22	30	36	42	50
	32 - 36	26	36	42	50	58
	36 - 40	30	42	48	58	68
9:12 to 12:12	24 - 28	20	28	34	40	46
	28 - 32	24	34	40	48	56
	32 - 36	28	40	48	56	66
	36 - 40	34	46	56	66	78

For SI: 1 inch = 25.4 mm, 1 pound per square foot = 0.0479 kPa, 1 mile per hour = 0.447 m/s, 1 foot = 304.8 mm, 1 mil = 0.0254 mm.

a. Ceiling diaphragm is composed of $^1/_2$-inch gypsum board (min. thickness) secured with screws spaced at 6 inches o.c. at panel edges and 12 inches o.c. infield. Use No. 8 screws (min.) when framing members have a designation thickness of 54 mils or less and No. 10 screws (min.) when framing members have a designation thickness greater than 54 mils.

b. Maximum aspect ratio (length/width) of diaphragms is 2:1.

c. Building width is in the direction of horizontal framing members supported by the wall studs.

d. Required diaphragm lengths are to be provided at each end of the structure.

e. Required diaphragm lengths are permitted to be multiplied by 0.35 if all panel edges are blocked.

f. Required diaphragm lengths are permitted to be multiplied by 0.9 if all panel edges are secured with screws spaced at 4 inches o.c.

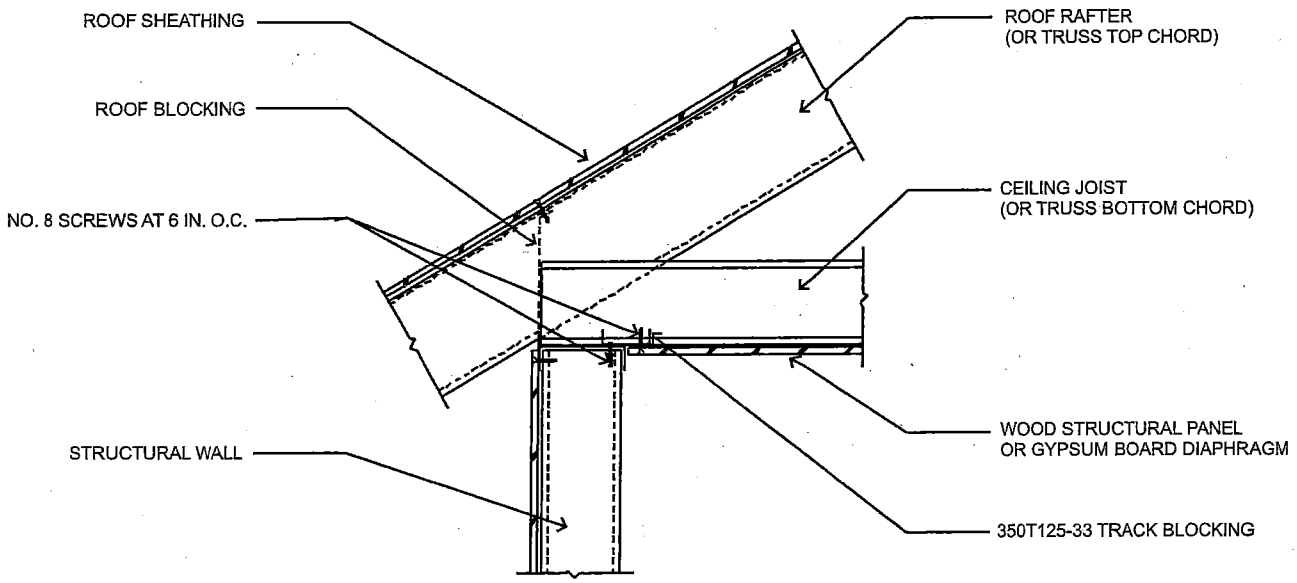

For SI: 1 inch = 25.4 mm.

FIGURE R804.3.8(2)
CEILING DIAPHRAGM TO SIDEWALL DETAIL

TABLE R804.3.8(3)
REQUIRED LENGTHS FOR CEILING DIAPHRAGMS AT GABLE ENDWALLS
WOOD STRUCTURAL PANEL SHEATHED CEILING HEIGHT = 8, 9 OR 10 FEET[a, b, c, d]

Exposure B		BASIC WIND SPEED (mph)				
		85	100	110	—	—
Exposure C		—	85	—	100	110
Roof pitch	Building endwall width (feet)	Minimum diaphragm length (feet)				
3:12 to 6:12	24 - 28	10	10	10	10	10
	28 - 32	12	12	12	12	12
	32 - 36	12	12	12	12	12
	36 - 40	14	14	14	14	14
6:12 to 9:12	24 - 28	10	10	10	10	10
	28 - 32	12	12	12	12	12
	32 - 36	12	12	12	12	12
	36 - 40	14	14	14	14	14
9:12 to 12:12	24 - 28	10	10	10	10	10
	28 - 32	12	12	12	12	12
	32 - 36	12	12	12	12	12
	36 - 40	14	14	14	14	14

For SI: 1 inch = 25.4 mm, 1 pound per square foot = 0.0479 kPa, 1 mile per hour = 0.447 m/s, 1 foot = 304.8 mm, 1 mil = 0.0254 mm.

a. Ceiling diaphragm is composed of $^{3}/_{8}$-inch wood structural panel sheathing (min. thickness) secured with screws spaced at 6 inches o.c. at panel edges and in field.
Use No. 8 screws (min.) when framing members have a designation thickness of 54 mils or less and No. 10 screws (min.) when framing members have a designation thickness greater than 54 mils.

b. Maximum aspect ratio (length/width) of diaphragms is 3:1.

c. Building width is in the direction of horizontal framing members supported by the wall studs.

d. Required diaphragm lengths are to be provided at each end of the structure.

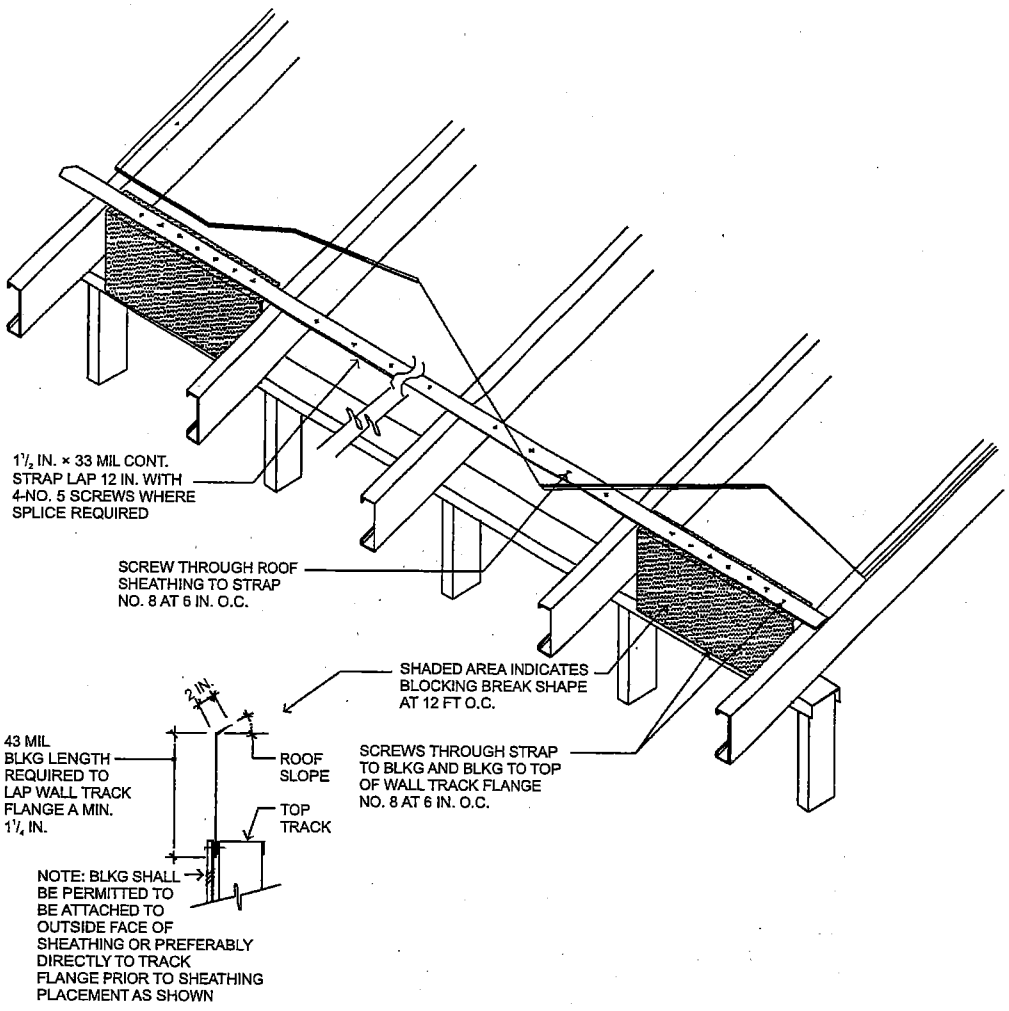

For SI: 1 mil = 0.0254 mm, 1 inch = 25.4 mm.

FIGURE R804.3.8(3)
ROOF BLOCKING DETAIL

SECTION R805
CEILING FINISHES

R805.1 Ceiling installation. Ceilings shall be installed in accordance with the requirements for interior wall finishes as provided in Section R702.

SECTION R806
ROOF VENTILATION

R806.1 Ventilation required. Enclosed attics and enclosed rafter spaces formed where ceilings are applied directly to the underside of roof rafters shall have cross ventilation for each separate space by ventilating openings protected against the entrance of rain or snow. Ventilation openings shall have a least dimension of $^1/_{16}$ inch (1.6 mm) minimum and $^1/_4$ inch (6.4 mm) maximum. Ventilation openings having a least dimension larger than $^1/_4$ inch (6.4 mm) shall be provided with corrosion-resistant wire cloth screening, hardware cloth, or similar material with openings having a least dimension of $^1/_{16}$ inch (1.6 mm) minimum and $^1/_4$ inch (6.4 mm) maximum. Openings in roof framing members shall conform to the requirements of Section R802.7. Required ventilation openings shall open directly to the outside air.

Exception: Attic ventilation shall not be required when determined not necessary by the code official due to atmospheric or climatic conditions.

R806.2 Minimum vent area. The minimum net free ventilating area shall be $^1/_{150}$ of the area of the vented space.

Exception: The minimum net free ventilation area shall be $^1/_{300}$ of the vented space provided one or more of the following conditions are met:

1. In Climate Zones *14 and 16*, a Class I or II vapor retarder is installed on the warm-in-winter side of the ceiling.
2. At least 40 percent and not more than 50 percent of the required ventilating area is provided by ventilators located in the upper portion of the attic or rafter space. Upper ventilators shall be located no more

than 3 feet (914 mm) below the ridge or highest point of the space, measured vertically, with the balance of the required ventilation provided by eave or cornice vents. Where the location of wall or roof framing members conflicts with the installation of upper ventilators, installation more than 3 feet (914 mm) below the ridge or highest point of the space shall be permitted.

R806.3 Vent and insulation clearance. Where eave or cornice vents are installed, insulation shall not block the free flow of air. A minimum of a 1-inch (25 mm) space shall be provided between the insulation and the roof sheathing and at the location of the vent.

R806.4 Installation and weather protection. Ventilators shall be installed in accordance with manufacturer's installation instructions. Installation of ventilators in roof systems shall be in accordance with the requirements of Section R903. Installation of ventilators in wall systems shall be in accordance with the requirements of Section R703.1.

R806.5 Unvented attic and unvented enclosed rafter assemblies. Unvented attic assemblies (spaces between the ceiling joists of the top story and the roof rafters) and unvented enclosed rafter assemblies (spaces between ceilings that are applied directly to the underside of roof framing members/rafters and the structural roof sheathing at the top of the roof framing members/rafters) shall be permitted if all the following conditions are met:

1. The unvented attic space is completely contained within the building thermal envelope.
2. No interior Class I vapor retarders are installed on the ceiling side (attic floor) of the unvented attic assembly or on the ceiling side of the unvented enclosed rafter assembly.
3. Where wood shingles or shakes are used, a minimum $^1/_4$-inch (6 mm) vented air space separates the shingles or shakes and the roofing underlayment above the structural sheathing.
4. In *California Climate Zones 14 and 16,* any air-impermeable insulation shall be a Class II vapor retarder, or shall have a Class III vapor retarder coating or covering in direct contact with the underside of the insulation. *See Title 24, Part 6, Figure 100.1-A—California Climate Zones.*
5. Either Items 5.1, 5.2 or 5.3 shall be met, depending on the air permeability of the insulation directly under the structural roof sheathing. *No insulation shall be required when roof tiles, wood shingles or wood shakes, or any other roofing system using battens and no continuous underlayment is installed. A continuous layer shall be considered to exist if sheathing, roofing paper or any continuous layer which has a perm rate of no more than one perm under the dry cup method.*
   5.1. Air-impermeable insulation only. Insulation shall be applied in direct contact with the underside of the structural roof sheathing.
   5.2. Air-permeable insulation only. In addition to the air-permeable insulation installed directly below the structural sheathing, rigid board or sheet insulation *with an R-value of R-4* shall be installed directly above the structural roof sheathing for condensation control. <
   5.3. Air-impermeable and air-permeable insulation. The air-impermeable insulation shall be applied in direct contact with the underside of the structural roof sheathing for condensation control. < The air-permeable insulation shall be installed directly under the air-impermeable insulation.
   5.4. Where preformed insulation board is used as the air-impermeable insulation layer, it shall be sealed at the perimeter of each individual sheet interior surface to form a continuous layer. <

SECTION R807
ATTIC ACCESS

R807.1 Attic access. Buildings with combustible ceiling or roof construction shall have an *attic* access opening to attic areas that exceed 30 square feet (2.8 m2) and have a vertical height of 30 inches (762 mm) or greater. The vertical height shall be measured from the top of the ceiling framing members to the underside of the roof framing members.

The rough-framed opening shall not be less than 22 inches by 30 inches (559 mm by 762 mm) and shall be located in a hallway or other readily accessible location. When located in a wall, the opening shall be a minimum of 22 inches wide by 30 inches high (559 mm wide by 762 mm high). When the access is located in a ceiling, minimum unobstructed headroom in the attic space shall be 30 inches (762 mm) at some point above the access measured vertically from the bottom of ceiling framing members. See *the California Mechanical Code* for access requirements where mechanical equipment is located in attics.

CALIFORNIA RESIDENTIAL CODE – MATRIX ADOPTION TABLE
CHAPTER 9 – ROOF ASSEMBLIES

(Matrix Adoption Tables are non-regulatory, intended only as an aid to the user.
See Chapter 1 for state agency authority and building applications.)

Adopting agency	BSC	SFM	HCD			DSA		OSHPD				BSCC	DHS	AGR	DWR	CEC	CA	SL	SLC
			1	2	1/AC	AC	SS	1	2	3	4								
Adopt entire chapter																			
Adopt Entire Chapter as amended (amended sections listed below)			X																
Adopt only those sections that are listed below																			
Chapter / Section																			
R903.4.1			X																

* The California Code of Regulations (CCR), Title 19, Division 1 provisions that are found in the *California Fire Code* are a reprint from the current CCR, Title 19, Division 1 text for the code user's convenience only. The scope, applicability and appeals procedures of CCR, Title 19, Division I remain the same.

CHAPTER 9
ROOF ASSEMBLIES

SECTION R901
GENERAL

R901.1 Scope. The provisions of this chapter shall govern the design, materials, construction and quality of roof assemblies.

SECTION R902
ROOF CLASSIFICATION

R902.1 Roofing covering materials. Roofs shall be covered with materials as set forth in Sections R904 and R905. *A minimum Class A, B or C roofing shall be installed in areas designated by this section.* Classes A, B and C roofing required by this section to be listed shall be tested in accordance with UL 790 or ASTM E 108.

Exceptions:

1. Class A roof assemblies include those with coverings of brick, masonry and exposed concrete roof deck.
2. Class A roof assemblies also include ferrous or copper shingles or sheets, metal sheets and shingles, clay or concrete roof tile, or slate installed on noncombustible decks.
3. Class A roof assemblies include minimum 16 oz/ft^2 copper sheets installed over combustible decks.

R902.1.1 Roof coverings within very-high fire hazard severity zones. *The entire roof covering of every existing structure where more than 50 percent of the total roof area is replaced within any one-year period, the entire roof covering of every new structure, and any roof covering applied in the alteration, repair or replacement of the roof of every existing structure, shall be a fire-retardant roof covering that is at least Class A.*

Exception: *The requirements shall not apply in any jurisdiction that adopts the model ordinance approved by the State Fire Marshal pursuant to Section 51189 of the Government Code or an ordinance that substantially conforms to the model ordinance and transmits a copy to the State Fire Marshal.*

R902.1.2 Roof coverings within state responsibility areas. *The entire roof covering of every existing structure where more than 50 percent of the total roof area is replaced within any one-year period, the entire roof covering of every new structure, and any roof covering applied in the alteration, repair or replacement of the roof of every existing structure, shall be a fire-retardant roof covering that is at least Class B.*

Exception: *Areas designated as moderate fire hazard severity zones.*

R902.1.3 Roof coverings in all other areas. *The entire roof covering of every existing structure where more than 50 percent of the total roof area is replaced within any one-year period, the entire roof covering of every new structure, and any roof covering applied in the alteration, repair or replacement of the roof of every existing structure, shall be a fire-retardant roof covering that is at least Class C.*

R902.1.4 Roofing requirements a wildland-urban interface fire area. *Roofing requirements for structures located in a wildland-urban interface fire area shall also comply with Section R327.5.*

R902.2 Fire-retardant-treated shingles and shakes. Fire-retardant-treated wood shakes and shingles *are wood shakes and shingles complying with UBC Standard 15-3 or 15-4 which are impregnated by the full-cell vacuum-pressure process with fire-retardant chemicals, and which have been qualified by UBC Standard 15-2 for use on Class A, B or C roofs. Fire-retardant-treated wood shakes and shingles shall comply with ICC-ES EG107 and with the weathering requirements contained in Health and Safety Code Section 13132.7 (j). Each bundle shall bear labels from an ICBO accredited quality control agency identifying their roof-cov-*

ering classification and indicating their compliance with ICC-ES EG107 and with the weathering requirements contained in Health and Safety Code Section 13132.7 (j).

Health and Safety Code Section 13132.7 (j) No wood roof covering materials shall be sold or applied in this state unless both of the following conditions are met:

(1)The materials have been approved and listed by the State Fire Marshal as complying with the requirements of this section.

(2)The materials have passed at least five years of the 10-year natural weathering test. The 10-year natural weathering test required by this subdivision shall be conducted in accordance with Standard 15-2 of the 1994 edition of the Uniform Building Code at a testing facility recognized by the State Fire Marshal.

R902.3 Building integrated photovoltaic systems. *Rooftop installed building integrated photovoltaic systems that serve as the roof covering shall be listed and labeled for fire classification in accordance with Sections R902.1 through R902.1.4.*

R902.4 Photovoltaic panels and modules. *Rooftop mounted photovoltaic panels and modules shall be tested, listed and identified with a fire classification in accordance with UL 1703. The fire classification shall comply with Table 1505.1 of the California Building Code based on the type of construction of the building.*

SECTION R903
WEATHER PROTECTION

R903.1 General. Roof decks shall be covered with approved roof coverings secured to the building or structure in accordance with the provisions of this chapter. Roof assemblies shall be designed and installed in accordance with this code and the approved manufacturer's installation instructions such that the roof assembly shall serve to protect the building or structure.

R903.2 Flashing. Flashings shall be installed in a manner that prevents moisture from entering the wall and roof through joints in copings, through moisture permeable materials and at intersections with parapet walls and other penetrations through the roof plane.

R903.2.1 Locations. Flashings shall be installed at wall and roof intersections, wherever there is a change in roof slope or direction and around roof openings. A flashing shall be installed to divert the water away from where the eave of a sloped roof intersects a vertical sidewall. Where flashing is of metal, the metal shall be corrosion resistant with a thickness of not less than 0.019 inch (0.5 mm) (No. 26 galvanized sheet).

R903.2.2 Crickets and saddles. A cricket or saddle shall be installed on the ridge side of any chimney or penetration more than 30 inches (762 mm) wide as measured perpendicular to the slope. Cricket or saddle coverings shall be sheet metal or of the same material as the roof covering.

Exception: Unit skylights installed in accordance with Section R308.6 and flashed in accordance with the manufacturer's instructions shall be permitted to be installed without a cricket or saddle.

R903.3 Coping. Parapet walls shall be properly coped with noncombustible, weatherproof materials of a width no less than the thickness of the parapet wall.

R903.4 Roof drainage. Unless roofs are sloped to drain over roof edges, roof drains shall be installed at each low point of the roof.

R903.4.1 ***Secondary (emergency overflow) drains or scuppers.*** Where roof drains are required, secondary emergency overflow roof drains or scuppers shall be provided where the roof perimeter construction extends above the roof in such a manner that water will be entrapped if the primary drains allow buildup for any reason. Overflow drains having the same size as the roof drains shall be installed with the inlet flow line located 2 inches (51 mm) above the low point of the roof, or overflow scuppers having three times the size of the roof drains and having a minimum opening height of 4 inches (102 mm) shall be installed in the adjacent parapet walls with the inlet flow located 2 inches (51 mm) above the low point of the roof served. The installation and sizing of overflow drains, leaders and conductors shall comply with the *California Plumbing Code*.

SECTION R904
MATERIALS

R904.1 Scope. The requirements set forth in this section shall apply to the application of roof covering materials specified herein. Roof assemblies shall be applied in accordance with this chapter and the manufacturer's installation instructions. Installation of roof assemblies shall comply with the applicable provisions of Section R905.

R904.2 Compatibility of materials. Roof assemblies shall be of materials that are compatible with each other and with the building or structure to which the materials are applied.

R904.3 Material specifications and physical characteristics. Roof covering materials shall conform to the applicable standards listed in this chapter. In the absence of applicable standards or where materials are of questionable suitability, testing by an approved testing agency shall be required by the building official to determine the character, quality and limitations of application of the materials.

R904.4 Product identification. Roof covering materials shall be delivered in packages bearing the manufacturer's identifying marks and approved testing agency labels when required. Bulk shipments of materials shall be accompanied by the same information issued in the form of a certificate or on a bill of lading by the manufacturer.

SECTION R905
REQUIREMENTS FOR ROOF COVERINGS

R905.1 Roof covering application. Roof coverings shall be applied in accordance with the applicable provisions of this section and the manufacturer's installation instructions. Unless otherwise specified in this section, roof coverings shall be installed to resist the component and cladding loads specified in Table R301.2(2), adjusted for height and exposure in accordance with Table R301.2(3).

R905.2 Asphalt shingles. The installation of asphalt shingles shall comply with the provisions of this section.

R905.2.1 Sheathing requirements. Asphalt shingles shall be fastened to solidly sheathed decks.

R905.2.2 Slope. Asphalt shingles shall be used only on roof slopes of two units vertical in 12 units horizontal (2:12) or greater. For roof slopes from two units vertical in 12 units horizontal (2:12) up to four units vertical in 12 units horizontal (4:12), double underlayment application is required in accordance with Section R905.2.7.

R905.2.3 Underlayment. Unless otherwise noted, required underlayment shall conform to ASTM D 226 Type I, ASTM D 4869 Type I, or ASTM D 6757.

Self-adhering polymer modified bitumen sheet shall comply with ASTM D 1970.

R905.2.4 Asphalt shingles. Asphalt shingles shall comply with ASTM D 225 or D 3462.

R905.2.4.1 Wind resistance of asphalt shingles. Asphalt shingles shall be tested in accordance with ASTM D 7158. Asphalt shingles shall meet the classification requirements of Table R905.2.4.1(1) for the appropriate maximum basic wind speed. Asphalt shingle packaging shall bear a label to indicate compliance with ASTM D 7158 and the required classification in Table R905.2.4.1(1).

Exception: Asphalt shingles not included in the scope of ASTM D 7158 shall be tested and labeled to indicate compliance with ASTM D 3161 and the required classification in Table R905.2.4.1(2).

TABLE R905.2.4.1(1)
CLASSIFICATION OF ASPHALT ROOF SHINGLES PER ASTM D 7158

MAXIMUM BASIC WIND SPEED FROM FIGURE 301.2(4)A (mph)	CLASSIFICATION REQUIREMENT
85	D, G or H
90	D, G or H
100	G or H
110	G or H
120	G or H
130	H
140	H
150	H

For SI: 1 mile per hour = 0.447 m/s.

TABLE R905.2.4.1(2)
CLASSIFICATION OF ASPHALT SHINGLES PER ASTM D 3161

MAXIMUM BASIC WIND SPEED FROM FIGURE 301.2(4)A (mph)	CLASSIFICATION REQUIREMENT
85	A, D or F
90	A, D or F
100	A, D or F
110	F
120	F
130	F
140	F
150	F

For SI: 1 mile per hour = 0.447 m/s.

R905.2.5 Fasteners. Fasteners for asphalt shingles shall be galvanized steel, stainless steel, aluminum or copper roofing nails, minimum 12 gage [0.105 inch (3 mm)] shank with a minimum $^3/_8$-inch-diameter (10 mm) head, ASTM F 1667, of a length to penetrate through the roofing materials and a minimum of $^3/_4$ inch (19 mm) into the roof sheathing. Where the roof sheathing is less than $^3/_4$ inch (19 mm) thick, the fasteners shall penetrate through the sheathing. Fasteners shall comply with ASTM F 1667.

R905.2.6 Attachment. Asphalt shingles shall have the minimum number of fasteners required by the manufacturer, but not less than four fasteners per strip shingle or two fasteners per individual shingle. Where the roof slope exceeds 21 units vertical in 12 units horizontal (21:12, 175-percent slope), shingles shall be installed as required by the manufacturer.

R905.2.7 Underlayment application. For roof slopes from two units vertical in 12 units horizontal (17-percent slope), up to four units vertical in 12 units horizontal (33-percent slope), underlayment shall be two layers applied in the following manner. Apply a 19-inch (483 mm) strip of underlayment felt parallel to and starting at the eaves, fastened sufficiently to hold in place. Starting at the eave, apply 36-inch-wide (914 mm) sheets of underlayment, overlapping successive sheets 19 inches (483 mm), and fastened sufficiently to hold in place. Distortions in the underlayment shall not interfere with the ability of the shingles to seal. For roof slopes of four units vertical in 12 units horizontal (33-percent slope) or greater, underlayment shall be one layer applied in the following manner. Underlayment shall be applied shingle fashion, parallel to and starting from the eave and lapped 2 inches (51 mm), fastened sufficiently to hold in place. Distortions in the underlayment shall not interfere with the ability of the shingles to seal. End laps shall be offset by 6 feet (1829 mm).

R905.2.7.1 Ice barrier. In areas where there has been a history of ice forming along the eaves causing a backup of water as designated in Table R301.2(1), an ice barrier that consists of a least two layers of underlayment cemented together or of a self-adhering polymer modified bitumen sheet, shall be used in lieu of normal underlayment and extend from the lowest edges of all

roof surfaces to a point at least 24 inches (610 mm) inside the exterior wall line of the building.

Exception: Detached accessory structures that contain no conditioned floor area.

R905.2.7.2 Underlayment and high winds. Underlayment applied in areas subject to high winds [above 110 mph (49 m/s) in accordance with Figure R301.2(4)A] shall be applied with corrosion-resistant fasteners in accordance with manufacturer's installation instructions. Fasteners are to be applied along the overlap not farther apart than 36 inches (914 mm) on center.

Underlayment installed where the basic wind speed equals or exceeds 120 mph (54 m/s) shall comply with ASTM D 226 Type II, ASTM D 4869 Type IV, or ASTM D 6757. The underlayment shall be attached in a grid pattern of 12 inches (305 mm) between side laps with a 6-inch (152 mm) spacing at the side laps. Underlayment shall be applied in accordance with Section R905.2.7 except all laps shall be a minimum of 4 inches (102 mm). Underlayment shall be attached using metal or plastic cap nails with a head diameter of not less than 1 inch (25.4 mm) with a thickness of at least 32-gauge sheet metal. The cap-nail shank shall be a minimum of 12 gauge (0.105 inches) with a length to penetrate through the roof sheathing or a minimum of $^3/_4$ inch (19 mm) into the roof sheathing.

Exception: As an alternative, adhered underlayment complying with ASTM D 1970 shall be permitted.

R905.2.8 Flashing. Flashing for asphalt shingles shall comply with this section.

R905.2.8.1 Base and cap flashing. Base and cap flashing shall be installed in accordance with manufacturer's installation instructions. Base flashing shall be of either corrosion-resistant metal of minimum nominal 0.019-inch (0.5 mm) thickness or mineral surface roll roofing weighing a minimum of 77 pounds per 100 square feet (4 kg/m^2). Cap flashing shall be corrosion-resistant metal of minimum nominal 0.019-inch (0.5 mm) thickness.

R905.2.8.2 Valleys. Valley linings shall be installed in accordance with the manufacturer's installation instructions before applying shingles. Valley linings of the following types shall be permitted:

1. For open valleys (valley lining exposed) lined with metal, the valley lining shall be at least 24 inches (610 mm) wide and of any of the corrosion-resistant metals in Table R905.2.8.2.
2. For open valleys, valley lining of two plies of mineral surfaced roll roofing, complying with ASTM D 3909 or ASTM D 6380 Class M, shall be permitted. The bottom layer shall be 18 inches (457 mm) and the top layer a minimum of 36 inches (914 mm) wide.
3. For closed valleys (valley covered with shingles), valley lining of one ply of smooth roll roofing complying with ASTM D 6380 and at least 36 inches wide (914 mm) or valley lining as described in Item 1 or 2 above shall be permitted. Self-adhering polymer modified bitumen underlayment complying with ASTM D 1970 shall be permitted in lieu of the lining material.

R905.2.8.3 Sidewall flashing. Base flashing against a vertical sidewall shall be continuous or step flashing and shall be a minimum of 4 inches (102 mm) in height and 4 inches (102 mm) in width and shall direct water away from the vertical sidewall onto the roof and/or into the gutter. Where siding is provided on the vertical sidewall, the vertical leg of the flashing shall be continuous under the siding. Where anchored masonry veneer is provided on the vertical sidewall, the base flashing shall be provided in accordance with this section and counterflashing shall be provided in accordance with Section R703.7.2.2. Where exterior plaster or adhered masonry veneer is provided on the vertical sidewall, the base flashing shall be provided in accordance with this section and Section R703.6.3.

TABLE R905.2.8.2
VALLEY LINING MATERIAL

MATERIAL	MINIMUM THICKNESS (inches)	GAGE	WEIGHT (pounds)
Cold-rolled copper	0.0216 nominal	—	ASTM B 370, 16 oz. per square foot
Lead-coated copper	0.0216 nominal	—	ASTM B 101, 16 oz. per square foot
High-yield copper	0.0162 nominal	—	ASTM B 370, 12 oz. per square foot
Lead-coated high-yield copper	0.0162 nominal	—	ASTM B 101, 12 oz. per square foot
Aluminum	0.024	—	—
Stainless steel	—	28	—
Galvanized steel	0.0179	26 (zinc coated G90)	—
Zinc alloy	0.027	—	—
Lead	—	—	$2^1/_2$
Painted terne	—	—	20

For SI: 1 inch = 25.4 mm, 1 pound = 0.454 kg.

R905.2.8.4 Other flashing. Flashing against a vertical front wall, as well as soil stack, vent pipe and chimney flashing, shall be applied according to the asphalt shingle manufacturer's printed instructions.

R905.2.8.5 Drip edge. A drip edge shall be provided at eaves and gables of shingle roofs. Adjacent pieces of drip edge shall be overlapped a minimum of 2 inches (51 mm). Drip edges shall extend a minimum of 0.25 inch (6.4 mm) below the roof sheathing and extend up the roof deck a minimum of 2 inches (51 mm). Drip edges shall be mechanically fastened to the roof deck at a maximum of 12 inches (305 mm) o.c. with fasteners as specified in Section R905.2.5. Underlayment shall be installed over the drip edge along eaves and under the underlayment on gables. Unless specified differently by the shingle manufacturer, shingles are permitted to be flush with the drip edge.

R905.3 Clay and concrete tile. The installation of clay and concrete tile shall comply with the provisions of this section.

R905.3.1 Deck requirements. Concrete and clay tile shall be installed only over solid sheathing or spaced structural sheathing boards.

R905.3.2 Deck slope. Clay and concrete roof tile shall be installed on roof slopes of two and one-half units vertical in 12 units horizontal ($2^1/_2$:12) or greater. For roof slopes from two and one-half units vertical in 12 units horizontal ($2^1/_2$:12) to four units vertical in 12 units horizontal (4:12), double underlayment application is required in accordance with Section R905.3.3.

R905.3.3 Underlayment. Unless otherwise noted, required underlayment shall conform to ASTM D 226 Type II; ASTM D 2626 Type I; or ASTM D 6380 Class M mineral surfaced roll roofing.

R905.3.3.1 Low slope roofs. For roof slopes from two and one-half units vertical in 12 units horizontal ($2^1/_2$:12), up to four units vertical in 12 units horizontal (4:12), underlayment shall be a minimum of two layers underlayment applied as follows:

1. Starting at the eave, a 19-inch (483 mm) strip of underlayment shall be applied parallel with the eave and fastened sufficiently in place.
2. Starting at the eave, 36-inch-wide (914 mm) strips of underlayment felt shall be applied, overlapping successive sheets 19 inches (483 mm), and fastened sufficiently in place.

R905.3.3.2 High slope roofs. For roof slopes of four units vertical in 12 units horizontal (4:12) or greater, underlayment shall be a minimum of one layer of underlayment felt applied shingle fashion, parallel to and starting from the eaves and lapped 2 inches (51 mm), fastened sufficiently in place.

R905.3.3.3 Underlayment and high winds. Underlayment applied in areas subject to high wind [above 110 miles per hour (49 m/s) in accordance with Figure R301.2(4)A] shall be applied with corrosion-resistant fasteners in accordance with manufacturer's installation instructions. Fasteners are to be applied along the overlap not farther apart than 36 inches (914 mm) on center.

Underlayment installed where the basic wind speed equals or exceeds 120 mph (54 m/s) shall be attached in a grid pattern of 12 inches (305 mm) between side laps with a 6-inch (152 mm) spacing at the side laps. Underlayment shall be applied in accordance with Section R905.2.7 except all laps shall be a minimum of 4 inches (102 mm). Underlayment shall be attached using metal or plastic cap nails with a head diameter of not less than 1 inch (25.4 mm) with a thickness of at least 32-gauge sheet metal. The cap-nail shank shall be a minimum of 12 gauge (0.105 inches) with a length to penetrate through the roof sheathing or a minimum of $^3/_4$-inch (19 mm) into the roof sheathing.

Exception: As an alternative, adhered underlayment complying with ASTM D 1970 shall be permitted.

R905.3.4 Clay tile. Clay roof tile shall comply with ASTM C 1167.

R905.3.5 Concrete tile. Concrete roof tile shall comply with ASTM C 1492.

R905.3.6 Fasteners. Nails shall be corrosion resistant and not less than 11 gage, $^5/_{16}$-inch (11 mm) head, and of sufficient length to penetrate the deck a minimum of $^3/_4$ inch (19 mm) or through the thickness of the deck, whichever is less. Attaching wire for clay or concrete tile shall not be smaller than 0.083 inch (2 mm). Perimeter fastening areas include three tile courses but not less than 36 inches (914 mm) from either side of hips or ridges and edges of eaves and gable rakes.

R905.3.7 Application. Tile shall be applied in accordance with this chapter and the manufacturer's installation instructions, based on the following:

1. Climatic conditions.
2. Roof slope.
3. Underlayment system.
4. Type of tile being installed.

Clay and concrete roof tiles shall be fastened in accordance with this section and the manufacturer's installation instructions. Perimeter tiles shall be fastened with a minimum of one fastener per tile. Tiles with installed weight less than 9 pounds per square foot (0.4 kg/m^2) require a minimum of one fastener per tile regardless of roof slope. Clay and concrete roof tile attachment shall be in accordance with the manufacturer's installation instructions where applied in areas where the wind speed exceeds 100 miles per hour (45 m/s) and on buildings where the roof is located more than 40 feet (12 192 mm) above grade. In areas subject to snow, a minimum of two fasteners per tile is required. In all other areas, clay and concrete roof tiles shall be attached in accordance with Table R905.3.7.

TABLE R905.3.7
CLAY AND CONCRETE TILE ATTACHMENT

SHEATHING	ROOF SLOPE	NUMBER OF FASTENERS
Solid without battens	All	One per tile
Spaced or solid with battens and slope < 5:12	Fasteners not required	—
Spaced sheathing without battens	5:12 ≤ slope < 12:12	One per tile/ every other row
	12:12 ≤ slope < 24:12	One per tile

R905.3.8 Flashing. At the juncture of roof vertical surfaces, flashing and counterflashing shall be provided in accordance with this chapter and the manufacturer's installation instructions and, where of metal, shall not be less than 0.019 inch (0.5 mm) (No. 26 galvanized sheet gage) corrosion-resistant metal. The valley flashing shall extend at least 11 inches (279 mm) from the centerline each way and have a splash diverter rib not less than 1 inch (25 mm) high at the flow line formed as part of the flashing. Sections of flashing shall have an end lap of not less than 4 inches (102 mm). For roof slopes of three units vertical in 12 units horizontal (25-percent slope) and greater, valley flashing shall have a 36-inch-wide (914 mm) underlayment of one layer of Type I underlayment running the full length of the valley, in addition to other required underlayment. In areas where the average daily temperature in January is 25°F (-4°C) or less, metal valley flashing underlayment shall be solid-cemented to the roofing underlayment for slopes less than seven units vertical in 12 units horizontal (58-percent slope) or be of self-adhering polymer modified bitumen sheet.

R905.4 Metal roof shingles. The installation of metal roof shingles shall comply with the provisions of this section.

R905.4.1 Deck requirements. Metal roof shingles shall be applied to a solid or closely fitted deck, except where the roof covering is specifically designed to be applied to spaced sheathing.

R905.4.2 Deck slope. Metal roof shingles shall not be installed on roof slopes below three units vertical in 12 units horizontal (25-percent slope).

R905.4.3 Underlayment. Underlayment shall comply with ASTM D 226, Type I or Type II, ASTM D 4869, Type I or Type II, or ASTM D 1970. Underlayment shall be installed in accordance with the manufacturer's installation instructions.

R905.4.3.1 Ice barrier. In areas where there has been a history of ice forming along the eaves causing a backup of water as designated in Table R301.2(1), an ice barrier that consists of at least two layers of underlayment cemented together or a self-adhering polymer modified bitumen sheet shall be used in place of normal underlayment and extend from the lowest edges of all roof surfaces to a point at least 24 inches (610 mm) inside the exterior wall line of the building.

Exception: Detached accessory structures that contain no conditioned floor area.

R905.4.3.2 Underlayment and high winds. Underlayment applied in areas subject to high winds [above 110 mph (49 m/s) in accordance with Figure R301.2(4)A] shall be applied with corrosion-resistant fasteners in accordance with manufacturer's installation instructions. Fasteners are to be applied along the overlap not farther apart than 36 inches (914 mm) on center.

Underlayment installed where the basic wind speed equals or exceeds 120 mph (54 m/s) shall comply with ASTM D 226 Type II, ASTM D 4869 Type IV, or ASTM D 1970. The underlayment shall be attached in a grid pattern of 12 inches (305 mm) between side laps with a 6-inch (152 mm) spacing at the side laps. Underlayment shall be applied in accordance with Section R905.2.7 except all laps shall be a minimum of 4 inches (102 mm). Underlayment shall be attached using metal or plastic cap nails with a head diameter of not less than 1 inch (25.4 mm) with a thickness of at least 32 gauge sheet metal. The cap-nail shank shall be a minimum of 12 gauge (0.105 inches) with a length to penetrate through the roof sheathing or a minimum of $^3/_4$ inch (19 mm) into the roof sheathing.

Exception: As an alternative, adhered underlayment complying with ASTM D 1970 shall be permitted.

R905.4.4 Material standards. Metal roof shingle roof coverings shall comply with Table R905.10.3(1). The materials used for metal roof shingle roof coverings shall be naturally corrosion resistant or be made corrosion resistant in accordance with the standards and minimum thicknesses listed in Table R905.10.3(2).

R905.4.5 Application. Metal roof shingles shall be secured to the roof in accordance with this chapter and the *approved* manufacturer's installation instructions.

R905.4.6 Flashing. Roof valley flashing shall be of corrosion-resistant metal of the same material as the roof covering or shall comply with the standards in Table R905.10.3(1). The valley flashing shall extend at least 8 inches (203 mm) from the centerline each way and shall have a splash diverter rib not less than $^3/_4$ inch (19 mm) high at the flow line formed as part of the flashing. Sections of flashing shall have an end lap of not less than 4 inches (102 mm). The metal valley flashing shall have a 36-inch-wide (914 mm) underlayment directly under it consisting of one layer of underlayment running the full length of the valley, in addition to underlayment required for metal roof shingles. In areas where the average daily temperature in January is 25°F (-4°C) or less, the metal valley flashing underlayment shall be solid cemented to the roofing underlayment for roof slopes under seven units vertical in 12 units horizontal (58-percent slope) or self-adhering polymer modified bitumen sheet.

R905.5 Mineral-surfaced roll roofing. The installation of mineral-surfaced roll roofing shall comply with this section.

R905.5.1 Deck requirements. Mineral-surfaced roll roofing shall be fastened to solidly sheathed roofs.

R905.5.2 Deck slope. Mineral-surfaced roll roofing shall not be applied on roof slopes below one unit vertical in 12 units horizontal (8-percent slope).

R905.5.3 Underlayment. Underlayment shall comply with ASTM D 226, Type I or ASTM D 4869, Type I or II.

R905.5.3.1 Ice barrier. In areas where there has been a history of ice forming along the eaves causing a backup of water as designated in Table R301.2(1), an ice barrier that consists of at least two layers of underlayment cemented together or a self-adhering polymer modified bitumen sheet shall be used in place of normal underlayment and extend from the lowest edges of all roof surfaces to a point at least 24 inches (610 mm) inside the exterior wall line of the building.

Exception: Detached accessory structures that contain no conditioned floor area.

R905.5.3.2 Underlayment and high winds. Underlayment applied in areas subject to high winds [above 110 mph (49 m/s) in accordance with Figure R301.2(4)A] shall be applied with corrosion-resistant fasteners in accordance with manufacturer's installation instructions. Fasteners are to be applied along the overlap not farther apart than 36 inches (914 mm) on center.

Underlayment installed where the basic wind speed equals or exceeds 120 mph (54 m/s) shall comply with ASTM D 226 Type II or ASTM D 4869 Type IV. The underlayment shall be attached in a grid pattern of 12 inches (305 mm) between side laps with a 6-inch (152 mm) spacing at the side laps. Underlayment shall be applied in accordance with Section R905.2.7 except all laps shall be a minimum of 4 inches (102 mm). Underlayment shall be attached using metal or plastic cap nails with a head diameter of not less than 1 inch (25.4 mm) with a thickness of at least 32-gauge sheet metal. The cap-nail shank shall be a minimum of 12 gauge (0.105 inches) with a length to penetrate through the roof sheathing or a minimum of $^3/_4$ inch (19 mm) into the roof sheathing.

Exception: As an alternative, adhered underlayment complying with ASTM D 1970 shall be permitted.

R905.5.4 Material standards. Mineral-surfaced roll roofing shall conform to ASTM D 3909 or ASTM D 6380, Class M.

R905.5.5 Application. Mineral-surfaced roll roofing shall be installed in accordance with this chapter and the manufacturer's installation instructions.

R905.6 Slate and slate-type shingles. The installation of slate and slate-type shingles shall comply with the provisions of this section.

R905.6.1 Deck requirements. Slate shingles shall be fastened to solidly sheathed roofs.

R905.6.2 Deck slope. Slate shingles shall be used only on slopes of four units vertical in 12 units horizontal (33-percent slope) or greater.

R905.6.3 Underlayment. Underlayment shall comply with ASTM D 226, Type I, or ASTM D 4869, Type I or II. Underlayment shall be installed in accordance with the manufacturer's installation instructions.

R905.6.3.1 Ice barrier. In areas where there has been a history of ice forming along the eaves causing a backup of water as designated in Table R301.2(1), an ice barrier that consists of at least two layers of underlayment cemented together or a self-adhering polymer modified bitumen sheet shall be used in lieu of normal underlayment and extend from the lowest edges of all roof surfaces to a point at least 24 inches (610 mm) inside the exterior wall line of the building.

Exception: Detached accessory structures that contain no conditioned floor area.

R905.6.3.2 Underlayment and high winds. Underlayment applied in areas subject to high winds [above 110 mph (49 m/s) in accordance with Figure R301.2(4)A] shall be applied with corrosion-resistant fasteners in accordance with manufacturer's installation instructions. Fasteners are to be applied along the overlap not farther apart than 36 inches (914 mm) on center.

Underlayment installed where the basic wind speed equals or exceeds 120 mph (54 m/s) shall comply with ASTM D 226 Type II or ASTM D 4869 Type IV. The underlayment shall be attached in a grid pattern of 12 inches (305 mm) between side laps with a 6-inch (152 mm) spacing at the side laps. Underlayment shall be applied in accordance with Section R905.2.7 except all laps shall be a minimum of 4 inches (102 mm). Underlayment shall be attached using metal or plastic cap nails with a head diameter of not less than 1 inch (25.4 mm) with a thickness of at least 32-gauge sheet metal. The cap-nail shank shall be a minimum of 12 gauge (0.105 inches) with a length to penetrate through the roof sheathing or a minimum of $^3/_4$ inch (19 mm) into the roof sheathing.

Exception: As an alternative, adhered underlayment complying with ASTM D 1970 shall be permitted.

R905.6.4 Material standards. Slate shingles shall comply with ASTM C 406.

R905.6.5 Application. Minimum headlap for slate shingles shall be in accordance with Table R905.6.5. Slate shingles shall be secured to the roof with two fasteners per slate. Slate shingles shall be installed in accordance with this chapter and the manufacturer's installation instructions.

TABLE R905.6.5
SLATE SHINGLE HEADLAP

SLOPE	HEADLAP (inches)
4:12 ≤ slope < 8:12	4
8:12 ≤ slope < 20:12	3
Slope ≤ 20:12	2

For SI: 1 inch = 25.4 mm.

R905.6.6 Flashing. Flashing and counterflashing shall be made with sheet metal. Valley flashing shall be a minimum of 15 inches (381 mm) wide. Valley and flashing metal shall be a minimum uncoated thickness of 0.0179-inch (0.5 mm) zinc coated G90. Chimneys, stucco or brick walls shall have a minimum of two plies of felt for a cap flashing consisting of a 4-inch-wide (102 mm) strip of felt set in plastic cement and extending 1 inch (25 mm) above the first felt and a top coating of plastic cement. The felt shall extend over the base flashing 2 inches (51 mm).

R905.7 Wood shingles. The installation of wood shingles shall comply with the provisions of this section.

R905.7.1 Deck requirements. Wood shingles shall be installed on solid or spaced sheathing. Where spaced sheathing is used, sheathing boards shall not be less than 1-inch by 4-inch (25.4 mm by 102 mm) nominal dimensions and shall be spaced on centers equal to the weather exposure to coincide with the placement of fasteners.

R905.7.1.1 Solid sheathing required. In areas where the average daily temperature in January is 25°F (-4°C) or less, solid sheathing is required on that portion of the roof requiring the application of an ice barrier.

R905.7.2 Deck slope. Wood shingles shall be installed on slopes of three units vertical in 12 units horizontal (25-percent slope) or greater.

R905.7.3 Underlayment. Underlayment shall comply with ASTM D 226, Type I or ASTM D 4869, Type I or II.

R905.7.3.1 Ice barrier. In areas where there has been a history of ice forming along the eaves causing a backup of water as designated in Table R301.2(1), an ice barrier that consists of at least two layers of underlayment cemented together or a self-adhering polymer modified bitumen sheet shall be used in lieu of normal underlayment and extend from the lowest edges of all roof surfaces to a point at least 24 inches (610 mm) inside the exterior wall line of the building.

Exception: Detached accessory structures that contain no conditioned floor area.

R905.7.3.2 Underlayment and high winds. Underlayment applied in areas subject to high winds [above 110 mph (49 m/s) in accordance with Figure R301.2(4)A] shall be applied with corrosion-resistant fasteners in accordance with manufacturer's installation instructions. Fasteners are to be applied along the overlap not farther apart than 36 inches (914mm) on center.

Underlayment installed where the basic wind speed equals or exceeds 120 mph (54 m/s) shall comply with ASTM D 226 Type II or ASTM D 4869 Type IV. The underlayment shall be attached in a grid pattern of 12 inches (305 mm) between side laps with a 6-inch (152 mm) spacing at the side laps. Underlayment shall be applied in accordance with Section R905.2.7 except all Head laps shall be a minimum of 4 inches (102 mm). Underlayment shall be attached using metal or plastic cap nails with a head diameter of not less than 1 inch (25.4 mm) with a thickness of at least 32-gauge sheet metal. The cap-nail shank shall be a minimum of 12 gauge (0.105 inches) with a length to penetrate through the roof sheathing or a minimum of $^3/_4$ inch (19 mm) into the roof sheathing.

Exception: As an alternative, adhered underlayment complying with ASTM D 1970 shall be permitted.

R905.7.4 Material standards. Wood shingles shall be of naturally durable wood and comply with the requirements of Table R905.7.4.

TABLE R905.7.4
WOOD SHINGLE MATERIAL REQUIREMENTS

MATERIAL	MINIMUM GRADES	APPLICABLE GRADING RULES
Wood shingles of naturally durable wood	1, 2 or 3	Cedar Shake and Shingle Bureau

R905.7.5 Application. Wood shingles shall be installed according to this chapter and the manufacturer's installation instructions. Wood shingles shall be laid with a side lap not less than $1^1/_2$ inches (38 mm) between joints in courses, and no two joints in any three adjacent courses shall be in direct alignment. Spacing between shingles shall not be less than $^1/_4$ inch to $^3/_8$ inch (6 mm to 10 mm). Weather exposure for wood shingles shall not exceed those set in Table R905.7.5. Fasteners for wood shingles shall be corrosion resistant with a minimum penetration of $^1/_2$ inch (13 mm) into the sheathing. For sheathing less than $^1/_2$ inch (13 mm) in thickness, the fasteners shall extend through the sheathing. Wood shingles shall be attached to the roof with two fasteners per shingle, positioned no more than $^3/_4$ inch (19 mm) from each edge and no more than 1 inch (25 mm) above the exposure line.

TABLE R905.7.5
WOOD SHINGLE WEATHER EXPOSURE AND ROOF SLOPE

ROOFING MATERIAL	LENGTH (inches)	GRADE	EXPOSURE (inches)	
			3:12 pitch to < 4:12	4:12 pitch or steeper
Shingles of naturally durable wood	16	No. 1	$3^3/_4$	5
		No. 2	$3^1/_2$	4
		No. 3	3	$3^1/_2$
	18	No. 1	$4^1/_4$	$5^1/_2$
		No. 2	4	$4^1/_2$
		No. 3	$3^1/_2$	4
	24	No. 1	$5^3/_4$	$7^1/_2$
		No. 2	$5^1/_2$	$6^1/_2$
		No. 3	5	$5^1/_2$

For SI: 1 inch = 25.4 mm.

R905.7.6 Valley flashing. Roof flashing shall be not less than No. 26 gage [0.019 inches (0.5 mm)] corrosion-resistant sheet metal and shall extend 10 inches (254 mm) from the centerline each way for roofs having slopes less than 12 units vertical in 12 units horizontal (100-percent slope), and 7 inches (178 mm) from the centerline each way for slopes of 12 units vertical in 12 units horizontal and

greater. Sections of flashing shall have an end lap of not less than 4 inches (102 mm).

R905.7.7 Label required. Each bundle of shingles shall be identified by a label of an approved grading or inspection bureau or agency.

R905.8 Wood shakes. The installation of wood shakes shall comply with the provisions of this section.

R905.8.1 Deck requirements. Wood shakes shall be used only on solid or spaced sheathing. Where spaced sheathing is used, sheathing boards shall not be less than 1-inch by 4-inch (25 mm by 102 mm) nominal dimensions and shall be spaced on centers equal to the weather exposure to coincide with the placement of fasteners. Where 1-inch by 4-inch (25 mm by 102 mm) spaced sheathing is installed at 10 inches (254 mm) on center, additional 1-inch by 4-inch (25 mm by 102 mm) boards shall be installed between the sheathing boards.

R905.8.1.1 Solid sheathing required. In areas where the average daily temperature in January is 25°F (-4°C) or less, solid sheathing is required on that portion of the roof requiring an ice barrier.

R905.8.2 Deck slope. Wood shakes shall only be used on slopes of three units vertical in 12 units horizontal (25-percent slope) or greater.

R905.8.3 Underlayment. Underlayment shall comply with ASTM D 226, Type I or ASTM D 4869, Type I or II.

R905.8.3.1 Ice barrier. In areas where there has been a history of ice forming along the eaves causing a backup of water as designated in Table R301.2(1), an ice barrier that consists of at least two layers of underlayment cemented together or a self-adhering polymer modified bitumen sheet shall be used in place of normal underlayment and extend from the lowest edges of all roof surfaces to a point at least 24 inches (610 mm) inside the exterior wall line of the building.

Exception: Detached accessory structures that contain no conditioned floor area.

R905.8.3.2 Underlayment and high winds. Underlayment applied in areas subject to high winds [above 110 mph (49 m/s) in accordance with Figure R301.2(4)A] shall be applied with corrosion-resistant fasteners in accordance with manufacturer's installation instructions. Fasteners are to be applied along the overlap not farther apart than 36 inches (914 mm) on center.

Underlayment installed where the basic wind speed equals or exceeds 120 mph (54 m/s) shall comply with ASTM D 226 Type II or ASTM D 4869 Type IV. The underlayment shall be attached in a grid pattern of 12 inches (305 mm) between side laps with a 6-inch (152 mm) spacing at the side laps. Underlayment shall be applied in accordance with Section R905.2.7 except all laps shall be a minimum of 4 inches (102 mm). Underlayment shall be attached using metal or plastic cap nails with a head diameter of not less than 1 inch (25.4 mm) with a thickness of at least 32-gauge sheet metal. The cap-nail shank shall be a minimum of 12 gauge (0.105 inches) with a length to penetrate through the roof sheathing or a minimum of $^3/_4$ inch (19 mm) into the roof sheathing.

Exception: As an alternative, adhered underlayment complying with ASTM D 1970 shall be permitted.

R905.8.4 Interlayment. Interlayment shall comply with ASTM D 226, Type I.

R905.8.5 Material standards. Wood shakes shall comply with the requirements of Table R905.8.5.

R905.8.6 Application. Wood shakes shall be installed according to this chapter and the manufacturer's installation instructions. Wood shakes shall be laid with a side lap not less than $1^1/_2$ inches (38 mm) between joints in adjacent courses. Spacing between shakes in the same course shall be $^3/_8$ inch to $^5/_8$ inch (9.5 mm to 15.9 mm) for shakes and tapersawn shakes of naturally durable wood and shall be $^3/_8$ inch to $^5/_8$ inch (9.5 mm to 15.9 mm) for preservative-treated taper sawn shakes. Weather exposure for wood shakes shall not exceed those set forth in Table R905.8.6. Fasteners for wood shakes shall be corrosion-resistant, with a minimum penetration of $^1/_2$ inch (12.7 mm) into the sheathing. For sheathing less than $^1/_2$ inch (12.7 mm) thick, the fasteners shall extend through the sheathing. Wood shakes shall be attached to the roof with two fasteners per shake, positioned no more than 1 inch (25 mm) from each edge and no more than 2 inches (51 mm) above the exposure line.

R905.8.7 Shake placement. The starter course at the eaves shall be doubled and the bottom layer shall be either 15-inch (381 mm), 18-inch (457 mm) or 24-inch (610 mm) wood shakes or wood shingles. Fifteen-inch (381 mm) or 18-inch (457 mm) wood shakes may be used for the final course at the ridge. Shakes shall be interlaid with 18-inch-wide (457 mm) strips of not less than No. 30 felt shingled between each course in such a manner that no felt

TABLE R905.8.5
WOOD SHAKE MATERIAL REQUIREMENTS

MATERIAL	MINIMUM GRADES	APPLICABLE GRADING RULES
Wood shakes of naturally durable wood	1	Cedar Shake and Shingle Bureau
Taper sawn shakes of naturally durable wood	1 or 2	Cedar Shake and Shingle Bureau
Preservative-treated shakes and shingles of naturally durable wood	1	Cedar Shake and Shingle Bureau
Fire-retardant-treated shakes and shingles of naturally durable wood	1	Cedar Shake and Shingle Bureau
Preservative-treated taper sawn shakes of Southern pine treated in accordance with AWPA Standard U1 (Commodity Specification A, Use Category 3B and Section 5.6)	1 or 2	Forest Products Laboratory of the Texas Forest Services

is exposed to the weather by positioning the lower edge of each felt strip above the butt end of the shake it covers a distance equal to twice the weather exposure.

TABLE R905.8.6
WOOD SHAKE WEATHER EXPOSURE AND ROOF SLOPE

ROOFING MATERIAL	LENGTH (inches)	GRADE	EXPOSURE (inches)
			4:12 pitch or steeper
Shakes of naturally durable wood	18	No. 1	$7^1/_2$
	24	No. 1	10[a]
Preservative-treated taper sawn shakes of Southern Yellow Pine	18	No. 1	$7^1/_2$
	24	No. 1	10
	18	No. 2	$5^1/_2$
	24	No. 2	$7^1/_2$
Taper-sawn shakes of naturally durable wood	18	No. 1	$7^1/_2$
	24	No. 1	10
	18	No. 2	$5^1/_2$
	24	No. 2	$7^1/_2$

For SI: 1 inch = 25.4 mm.

a. For 24-inch by $^3/_8$-inch handsplit shakes, the maximum exposure is $7^1/_2$ inches.

R905.8.8 Valley flashing. Roof valley flashing shall not be less than No. 26 gage [0.019 inch (0.5 mm)] corrosion-resistant sheet metal and shall extend at least 11 inches (279 mm) from the centerline each way. Sections of flashing shall have an end lap of not less than 4 inches (102 mm).

R905.8.9 Label required. Each bundle of shakes shall be identified by a label of an approved grading or inspection bureau or agency.

R905.9 Built-up roofs. The installation of built-up roofs shall comply with the provisions of this section.

R905.9.1 Slope. Built-up roofs shall have a design slope of a minimum of one-fourth unit vertical in 12 units horizontal (2-percent slope) for drainage, except for coal-tar built-up roofs, which shall have a design slope of a minimum one-eighth unit vertical in 12 units horizontal (1-percent slope).

R905.9.2 Material standards. Built-up roof covering materials shall comply with the standards in Table R905.9.2 or UL 55A.

R905.9.3 Application. Built-up roofs shall be installed according to this chapter and the manufacturer's installation instructions.

R905.10 Metal roof panels. The installation of metal roof panels shall comply with the provisions of this section.

R905.10.1 Deck requirements. Metal roof panel roof coverings shall be applied to solid or spaced sheathing, except where the roof covering is specifically designed to be applied to spaced supports.

TABLE R905.9.2
BUILT-UP ROOFING MATERIAL STANDARDS

MATERIAL STANDARD	STANDARD
Acrylic coatings used in roofing	ASTM D 6083
Aggregate surfacing	ASTM D 1863
Asphalt adhesive used in roofing	ASTM D 3747
Asphalt cements used in roofing	ASTM D 2822; D 3019; D 4586
Asphalt-coated glass fiber base sheet	ASTM D 4601
Asphalt coatings used in roofing	ASTM D 1227; D 2823; D 2824; D 4479
Asphalt glass felt	ASTM D 2178
Asphalt primer used in roofing	ASTM D 41
Asphalt-saturated and asphalt-coated organic felt base sheet	ASTM D 2626
Asphalt-saturated organic felt (perforated)	ASTM D 226
Asphalt used in roofing	ASTM D 312
Coal-tar cements used in roofing	ASTM D 4022; D 5643
Coal-tar primer used in roofing, dampproofing and waterproofing	ASTM D 43
Coal-tar saturated organic felt	ASTM D 227
Coal-tar used in roofing	ASTM D 450, Type I or II
Glass mat, coal tar	ASTM D 4990
Glass mat, venting type	ASTM D 4897
Mineral-surfaced inorganic cap sheet	ASTM D 3909
Thermoplastic fabrics used in roofing	ASTM D 5665; D 5726

R905.10.2 Slope. Minimum slopes for metal roof panels shall comply with the following:

1. The minimum slope for lapped, nonsoldered-seam metal roofs without applied lap sealant shall be three units vertical in 12 units horizontal (25-percent slope).
2. The minimum slope for lapped, nonsoldered-seam metal roofs with applied lap sealant shall be one-half vertical unit in 12 units horizontal (4-percent slope). Lap sealants shall be applied in accordance with the approved manufacturer's installation instructions.
3. The minimum slope for standing-seam roof systems shall be one-quarter unit vertical in 12 units horizontal (2-percent slope).

R905.10.3 Material standards. Metal-sheet roof covering systems that incorporate supporting structural members shall be designed in accordance with the *California Building Code*. Metal-sheet roof coverings installed over structural decking shall comply with Table R905.10.3(1). The materials used for metal-sheet roof coverings shall be naturally corrosion resistant or provided with corrosion resistance in accordance with the standards and minimum thicknesses shown in Table R905.10.3(2).

R905.10.4 Attachment. Metal roof panels shall be secured to the supports in accordance with this chapter and the manufacturer's installation instructions. In the absence of manufacturer's installation instructions, the following fasteners shall be used:

1. Galvanized fasteners shall be used for steel roofs.
2. Copper, brass, bronze, copper alloy and 300-series stainless steel fasteners shall be used for copper roofs.
3. Stainless steel fasteners are acceptable for metal roofs.

TABLE R905.10.3(2)
MINIMUM CORROSION RESISTANCE

55% aluminum-zinc alloy coated steel	ASTM A 792 AZ 50
5% aluminum alloy-coated steel	ASTM A 875 GF60
Aluminum-coated steel	ASTM A 463 T2 65
Galvanized steel	ASTM A 653 G-90
Prepainted steel	ASTM A 755[a]

a. Paint systems in accordance with ASTM A 755 shall be applied over steel products with corrosion-resistant coatings complying with ASTM A 792, ASTM A 875, ASTM A 463, or ASTM A 653.

R905.10.5 Underlayment. Underlayment shall be installed in accordance with the manufacturer's installation instructions.

R905.10.5.1 Underlayment and high winds. Underlayment applied in areas subject to high winds [above 110 mph (49 m/s) in accordance with Figure R301.2(4)A] shall be applied with corrosion-resistant fasteners in accordance with manufacturer's installation instructions. Fasteners are to be applied along the overlap not farther apart than 36 inches (914 mm) on center.

Underlayment installed where the basic wind speed equals or exceeds 120 mph (54 m/s) shall comply with ASTM D 226 Type II. The underlayment shall be attached in a grid pattern of 12 inches (305 mm) between side laps with a 6-inch (152 mm) spacing at the side laps. Underlayment shall be applied in accordance with Section R905.2.7 except all laps shall be a minimum of 4 inches (102 mm). Underlayment shall be attached using metal or plastic cap nails with a head diameter of not less than 1 inch (25.4 mm) with a thickness of at least 32-gauge sheet metal. The cap-nail shank shall be a minimum of 12 gauge (0.105 inches) with a length to penetrate through the roof sheathing or a minimum of $^3/_4$ inch (19 mm) into the roof sheathing.

Exception: As an alternative, adhered underlayment complying with ASTM D 1970 shall be permitted.

TABLE R905.10.3(1)
METAL ROOF COVERING STANDARDS

ROOF COVERING TYPE	STANDARD APPLICATION RATE/THICKNESS
Galvanized steel	ASTM A 653 G90 Zinc coated
Stainless steel	ASTM A 240, 300 Series alloys
Steel	ASTM A 924
Lead-coated copper	ASTM B 101
Cold-rolled copper	ASTM B 370 minimum 16 oz/sq ft and 12 oz/sq ft high-yield copper for metal-sheet roof-covering systems; 12 oz/sq ft for preformed metal shingle systems.
Hard lead	2 lb/sq ft
Soft lead	3 lb/sq ft
Aluminum	ASTM B 209, 0.024 minimum thickness for roll-formed panels and 0.019-inch minimum thickness for pressformed shingles.
Terne (tin) and terne-coated stainless	Terne coating of 40 lb per double base box, field painted where applicable in accordance with manufacturer's installation instructions.
Zinc	0.027 inch minimum thickness: 99.995% electrolytic high-grade zinc with alloy additives of copper (0.08 - 0.20%), titanium (0.07% - 0.12%) and aluminum (0.015%).

For SI: 1 ounce per square foot = 0.305 kg/m^2, 1 pound per square foot = 4.214 kg/m^2, 1 inch = 25.4 mm, 1 pound = 0.454 kg.

R905.11 Modified bitumen roofing. The installation of modified bitumen roofing shall comply with the provisions of this section.

R905.11.1 Slope. Modified bitumen membrane roofs shall have a design slope of a minimum of one-fourth unit vertical in 12 units horizontal (2-percent slope) for drainage.

R905.11.2 Material standards. Modified bitumen roof coverings shall comply with the standards in Table R905.11.2.

TABLE R905.11.2
MODIFIED BITUMEN ROOFING MATERIAL STANDARDS

MATERIAL	STANDARD
Acrylic coating	ASTM D 6083
Asphalt adhesive	ASTM D 3747
Asphalt cement	ASTM D 3019
Asphalt coating	ASTM D 1227; D 2824
Asphalt primer	ASTM D 41
Modified bitumen roof membrane	ASTM D 6162; D 6163; D 6164; D 6222; D 6223; D 6298; CGSB 37-GP-56M

R905.11.3 Application. Modified bitumen roofs shall be installed according to this chapter and the manufacturer's installation instructions.

R905.12 Thermoset single-ply roofing. The installation of thermoset single-ply roofing shall comply with the provisions of this section.

R905.12.1 Slope. Thermoset single-ply membrane roofs shall have a design slope of a minimum of one-fourth unit vertical in 12 units horizontal (2-percent slope) for drainage.

R905.12.2 Material standards. Thermoset single-ply roof coverings shall comply with ASTM D 4637, ASTM D 5019 or CGSB 37-GP-52M.

R905.12.3 Application. Thermoset single-ply roofs shall be installed according to this chapter and the manufacturer's installation instructions.

R905.13 Thermoplastic single-ply roofing. The installation of thermoplastic single-ply roofing shall comply with the provisions of this section.

R905.13.1 Slope. Thermoplastic single-ply membrane roofs shall have a design slope of a minimum of one-fourth unit vertical in 12 units horizontal (2-percent slope).

R905.13.2 Material standards. Thermoplastic single-ply roof coverings shall comply with ASTM D 4434, ASTM D 6754, ASTM D 6878 or CGSB CAN/CGSB 37.54.

R905.13.3 Application. Thermoplastic single-ply roofs shall be installed according to this chapter and the manufacturer's installation instructions.

R905.14 Sprayed polyurethane foam roofing. The installation of sprayed polyurethane foam roofing shall comply with the provisions of this section.

R905.14.1 Slope. Sprayed polyurethane foam roofs shall have a design slope of a minimum of one-fourth unit vertical in 12 units horizontal (2-percent slope) for drainage.

R905.14.2 Material standards. Spray-applied polyurethane foam insulation shall comply with ASTM C 1029, Type III or IV.

R905.14.3 Application. Foamed-in-place roof insulation shall be installed in accordance with this chapter and the manufacturer's installation instructions. A liquid-applied protective coating that complies with Table R905.14.3 shall be applied no less than 2 hours nor more than 72 hours following the application of the foam.

TABLE R905.14.3
PROTECTIVE COATING MATERIAL STANDARDS

MATERIAL	STANDARD
Acrylic coating	ASTM D 6083
Silicone coating	ASTM D 6694
Moisture-cured polyurethane coating	ASTM D 6947

R905.14.4 Foam plastics. Foam plastic materials and installation shall comply with Section R316.

R905.15 Liquid-applied roofing. The installation of liquid-applied roofing shall comply with the provisions of this section.

R905.15.1 Slope. Liquid-applied roofing shall have a design slope of a minimum of one-fourth unit vertical in 12 units horizontal (2-percent slope).

R905.15.2 Material standards. Liquid-applied roofing shall comply with ASTM C 836, C 957, D 1227, D 3468, D 6083, D 6694 or D 6947.

R905.15.3 Application. Liquid-applied roofing shall be installed according to this chapter and the manufacturer's installation instructions.

R905.16 Photovoltaic modules/shingles. The installation of photovoltaic modules/shingles shall comply with the provisions of this section.

R905.16.1 Material standards. Photovoltaic modules/shingles shall be listed and labeled in accordance with UL 1703.

R905.16.2 Attachment. Photovoltaic modules/shingles shall be attached in accordance with the manufacturer's installation instructions.

R905.16.3 Wind resistance. Photovoltaic modules/shingles shall be tested in accordance with procedures and acceptance criteria in ASTM D 3161. Photovoltaic modules/shingles shall comply with the classification requirements of Table R905.2.4.1(2) for the appropriate maximum basic wind speed. Photovoltaic modules/shingle packaging shall bear a label to indicate compliance with the procedures in ASTM D 3161 and the required classification from Table R905.2.4.1(2).

SECTION R906
ROOF INSULATION

R906.1 General. The use of above-deck thermal insulation shall be permitted provided such insulation is covered with an approved roof covering and complies with FM 4450 or UL 1256.

R906.2 Material standards. Above-deck thermal insulation board shall comply with the standards in Table R906.2.

TABLE R906.2
MATERIAL STANDARDS FOR ROOF INSULATION

Cellular glass board	ASTM C 552
Composite boards	ASTM C 1289, Type III, IV, V or VI
Expanded polystyrene	ASTM C 578
Extruded polystyrene board	ASTM C 578
Perlite board	ASTM C 728
Polyisocyanurate board	ASTM C 1289, Type I or II
Wood fiberboard	ASTM C 208

SECTION R907
REROOFING

R907.1 General. Materials and methods of application used for re-covering or replacing an existing roof covering shall comply with the requirements of Chapter 9.

Exception: Reroofing shall not be required to meet the minimum design slope requirement of one-quarter unit vertical in 12 units horizontal (2-percent slope) in Section R905 for roofs that provide positive roof drainage.

R907.2 Structural and construction loads. The structural roof components shall be capable of supporting the roof covering system and the material and equipment loads that will be encountered during installation of the roof covering system.

R907.3 Recovering versus replacement. New roof coverings shall not be installed without first removing all existing layers of roof coverings where any of the following conditions exist:

1. Where the existing roof or roof covering is water-soaked or has deteriorated to the point that the existing roof or roof covering is not adequate as a base for additional roofing.
2. Where the existing roof covering is wood shake, slate, clay, cement or asbestos-cement tile.
3. Where the existing roof has two or more applications of any type of roof covering.

➡ **Exceptions:**

1. Complete and separate roofing systems, such as standing-seam metal roof systems, that are designed to transmit the roof loads directly to the building's structural system and that do not rely on existing roofs and roof coverings for support, shall not require the removal of existing roof coverings.
2. Installation of metal panel, metal shingle and concrete and clay tile roof coverings over existing wood shake roofs shall be permitted when the application is in accordance with Section R907.4.
3. The application of new protective coating over existing spray polyurethane foam roofing systems shall be permitted without tear-off of existing roof coverings.
4. Where the existing roof assembly includes an ice barrier membrane that is adhered to the roof deck, the existing ice barrier membrane shall be permitted to remain in place and covered with an additional layer of ice barrier membrane in accordance with Section R905.

R907.4 Roof recovering. Where the application of a new roof covering over wood shingle or shake roofs creates a combustible concealed space, the entire existing surface shall be covered with gypsum board, mineral fiber, glass fiber or other approved materials securely fastened in place.

R907.5 Reinstallation of materials. Existing slate, clay or cement tile shall be permitted for reinstallation, except that damaged, cracked or broken slate or tile shall not be reinstalled. Any existing flashings, edgings, outlets, vents or similar devices that are a part of the assembly shall be replaced when rusted, damaged or deteriorated. Aggregate surfacing materials shall not be reinstalled.

R907.6 Flashings. Flashings shall be reconstructed in accordance with approved manufacturer's installation instructions. Metal flashing to which bituminous materials are to be adhered shall be primed prior to installation.

SECTION R908
SOLAR PHOTOVOLTAIC PANELS/MODULES

R908.1 Photovoltaic systems. *Rooftop mounted photovoltaic shall be designed in accordance with this section.*

R908.1.2 (IBC/CBC 1509.7.1 Not an SFM provision. Reserved for other agencies)

R908.1.3 Fire classification. *Rooftop mounted photovoltaic panels and modules shall have the fire classification as required by Section R902.4.*

R908.1.4 Installation. *Rooftop mounted photovoltaic systems shall be installed in accordance with the manufacturer's installation instructions.*

R908.1.5 Photovoltaic panels and modules. *Photovoltaic panels and modules mounted on top of a roof shall be listed and labeled in accordance with UL 1703 and shall be installed in accordance with the manufacturer's installation instructions.*

R908.1.6 Fire safety provisions for photovoltaic panels/modules. *Solar photovoltaic panels/modules installed upon a roof or as an integral part of a roof assembly shall comply with the requirements of this code (see Section R331) and the California Fire Code.*

CALIFORNIA RESIDENTIAL CODE – MATRIX ADOPTION TABLE
CHAPTER 10 – CHIMNEYS AND FIREPLACES

(Matrix Adoption Tables are non-regulatory, intended only as an aid to the user.
See Chapter 1 for state agency authority and building applications.)

Adopting agency	BSC	SFM	HCD			DSA		OSHPD				BSCC	DHS	AGR	DWR	CEC	CA	SL	SLC
			1	2	1/AC	AC	SS	1	2	3	4								
Adopt entire chapter																			
Adopt entire chapter as amended (amended sections listed below)			X																
Adopt only those sections that are listed below																			
Chapter / Section																			
R1001.3			X																
R1001.4			X																
Table R1001.1			X																
R1003.3			X																
R1003.4			X																
R1003.11.3			X																
R1003.14			X																

* The California Code of Regulations (CCR), Title 19, Division 1 provisions that are found in the *California Fire Code* are a reprint from the current CCR, Title 19, Division 1 text for the code user's convenience only. The scope, applicability and appeals procedures of CCR, Title 19, Division I remain the same.

CHAPTER 10
CHIMNEYS AND FIREPLACES

SECTION R1001
MASONRY FIREPLACES

R1001.1 General. Masonry fireplaces shall be constructed in accordance with this section and the applicable provisions of Chapters 3 and 4.

R1001.2 Footings and foundations. Footings for masonry fireplaces and their chimneys shall be constructed of concrete or solid masonry at least 12 inches (305 mm) thick and shall extend at least 6 inches (152 mm) beyond the face of the fireplace or foundation wall on all sides. Footings shall be founded on natural, undisturbed earth or engineered fill below frost depth. In areas not subjected to freezing, footings shall be at least 12 inches (305 mm) below finished grade.

R1001.2.1 Ash dump cleanout. Cleanout openings located within foundation walls below fireboxes, when provided, shall be equipped with ferrous metal or masonry doors and frames constructed to remain tightly closed except when in use. Cleanouts shall be accessible and located so that ash removal will not create a hazard to combustible materials.

R1001.3 Seismic reinforcing. Masonry or concrete chimneys in *all structures regulated by this code assigned to* Seismic Design Category *C*, D_0, D_1 or D_2 shall be reinforced. Reinforcing shall conform to the requirements set forth in Table R1001.1 and Section R609, Grouted Masonry.

R1001.3.1 Vertical reinforcing. For chimneys up to 40 inches (1016 mm) wide, four No. 4 continuous vertical bars shall be placed between wythes of solid masonry or within the cells of hollow unit masonry and grouted in accordance with Section R609. Grout shall be prevented from bonding with the flue liner so that the flue liner is free to move with thermal expansion. For chimneys more than 40 inches (1016 mm) wide, two additional No. 4 vertical bars shall be provided for each additional flue incorporated into the chimney or for each additional 40 inches (1016 mm) in width or fraction thereof.

R1001.3.2 Horizontal reinforcing. Vertical reinforcement shall be placed within $^1/_4$-inch (6 mm) ties, or other reinforcing of equivalent net cross-sectional area, placed in the bed joints according to Section R607 at a minimum of every 18 inches (457 mm) of vertical height. Two such ties shall be installed at each bend in the vertical bars.

R1001.4 Seismic anchorage. Masonry or concrete chimneys in *all structures regulated by this code assigned to* Seismic Design Category *C*, D_0, D_1 or D_2 shall be anchored at each floor, ceiling or roof line more than 6 feet (1829 mm) above grade, except where constructed completely within the exterior walls. Anchorage shall conform to the requirements of Section R1001.4.1.

R1001.4.1 Anchorage. Two $^3/_{16}$-inch by 1-inch (5 mm by 25 mm) straps shall be embedded a minimum of 12 inches (305 mm) into the chimney. Straps shall be hooked around the outer bars and extend 6 inches (152 mm) beyond the bend. Each strap shall be fastened to a minimum of four floor ceiling or floor joists or rafters with two $^1/_2$-inch (13 mm) bolts.

R1001.5 Firebox walls. Masonry fireboxes shall be constructed of solid masonry units, hollow masonry units grouted solid, stone or concrete. When a lining of firebrick at least 2 inches (51 mm) thick or other approved lining is provided, the minimum thickness of back and side walls shall each be 8 inches (203 mm) of solid masonry, including the lining. The width of joints between firebricks shall not be greater than $^1/_4$ inch (6 mm). When no lining is provided, the total minimum

TABLE R1001.1
SUMMARY OF REQUIREMENTS FOR MASONRY FIREPLACES AND CHIMNEYS

ITEM	LETTER[a]	REQUIREMENTS
Hearth slab thickness	A	4″
Hearth extension (each side of opening)	B	8″ fireplace opening < 6 square foot. 12″ fireplace opening ≥ 6 square foot.
Hearth extension (front of opening)	C	16″ fireplace opening < 6 square foot. 20″ fireplace opening ≥ 6 square foot.
Hearth slab reinforcing	D	Reinforced to carry its own weight and all imposed loads.
Thickness of wall of firebox	E	10″ solid brick or 8″ where a firebrick lining is used. Joints in firebrick $^1/_4$″ maximum.
Distance from top of opening to throat	F	8″
Smoke chamber wall thickness Unlined walls	G	6″ 8″
Chimney Vertical reinforcing[b]	H	Four No. 4 full-length bars for chimney up to 40″ wide. Add two No. 4 bars for each additional 40″ or fraction of width or each additional flue.
Horizontal reinforcing	J	$^1/_4$″ ties at 18″ and two ties at each bend in vertical steel.
Bond beams	K	No specified requirements.
Fireplace lintel	L	Noncombustible material.
Chimney walls with flue lining	M	Solid masonry units or hollow masonry units grouted solid with at least 4-inch nominal thickness.
Distances between adjacent flues	—	See Section R1003.13.
Effective flue area (based on area of fireplace opening)	P	See Section R1003.15.
Clearances Combustible material Mantel and trim Above roof	R	 See Sections R1001.11 and R1003.18. See Section R1001.11, Exception 4. 3′ at roofline and 2′ at 10′.
Anchorage[b] Strap Number Embedment into chimney Fasten to Bolts	S	 $^3/_{16}$″ × 1″ Two 12″ hooked around outer bar with 6″ extension. 4 joists Two $^1/_2$″ diameter.
Footing Thickness Width	T	 12″ min. 6″ each side of fireplace wall.

For SI: 1 inch = 25.4 mm, 1 foot = 304.8 mm, 1 square foot = 0.0929 m^2.

Note: This table provides a summary of major requirements for the construction of masonry chimneys and fireplaces. Letter references are to Figure R1001.1, which shows examples of typical construction. This table does not cover all requirements, nor does it cover all aspects of the indicated requirements. For the actual mandatory requirements of the code, see the indicated section of text.

a. The letters refer to Figure R1001.1.

b. Not required in Seismic Design Category A *or* B.

thickness of back and side walls shall be 10 inches (254 mm) of solid masonry. Firebrick shall conform to ASTM C 27 or C 1261 and shall be laid with medium duty refractory mortar conforming to ASTM C 199.

R1001.5.1 Steel fireplace units. Installation of steel fireplace units with solid masonry to form a masonry fireplace is permitted when installed either according to the requirements of their listing or according to the requirements of this section. Steel fireplace units incorporating a steel firebox lining, shall be constructed with steel not less than $^1/_4$ inch (6 mm) thick, and an air-circulating chamber which is ducted to the interior of the building. The firebox lining shall be encased with solid masonry to provide a total thickness at the back and sides of not less than 8 inches (203 mm), of which not less than 4 inches (102 mm) shall be of solid masonry or concrete. Circulating air ducts used with steel fireplace units shall be constructed of metal or masonry.

R1001.6 Firebox dimensions. The firebox of a concrete or masonry fireplace shall have a minimum depth of 20 inches (508 mm). The throat shall not be less than 8 inches (203 mm) above the fireplace opening. The throat opening shall not be less than 4 inches (102 mm) deep. The cross-sectional area of the passageway above the firebox, including the throat, damper and smoke chamber, shall not be less than the cross-sectional area of the flue.

Exception: Rumford fireplaces shall be permitted provided that the depth of the fireplace is at least 12 inches (305 mm) and at least one-third of the width of the fireplace opening, that the throat is at least 12 inches (305 mm) above the lintel and is at least $^1/_{20}$ the cross-sectional area of the fireplace opening.

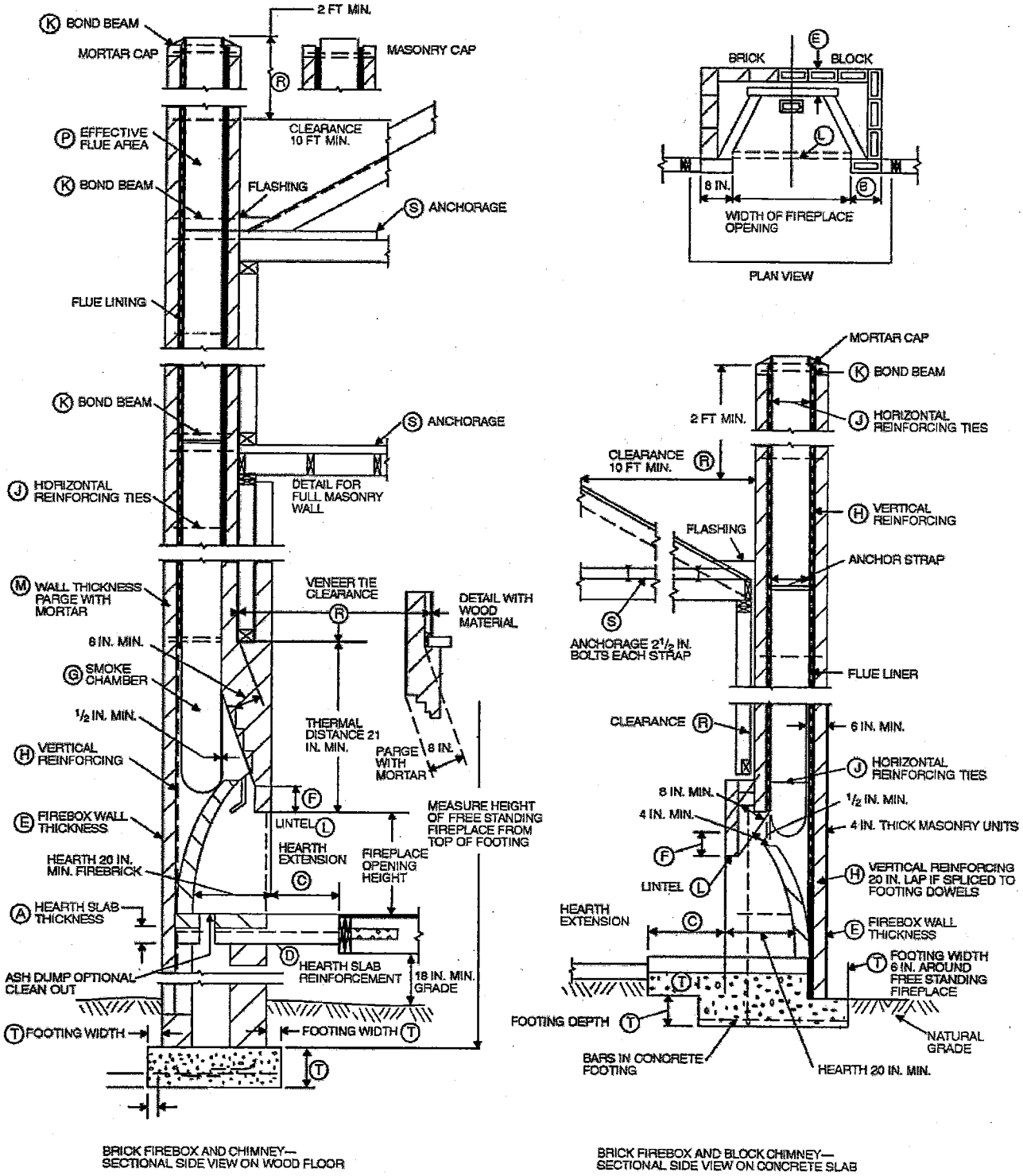

For SI: 1 inch = 25.4 mm, 1 foot = 304.8 mm.

FIGURE R1001.1
FIREPLACE AND CHIMNEY DETAILS

R1001.7 Lintel and throat. Masonry over a fireplace opening shall be supported by a lintel of noncombustible material. The minimum required bearing length on each end of the fireplace opening shall be 4 inches (102 mm). The fireplace throat or damper shall be located a minimum of 8 inches (203 mm) above the lintel.

R1001.7.1 Damper. Masonry fireplaces shall be equipped with a ferrous metal damper located at least 8 inches (203 mm) above the top of the fireplace opening. Dampers shall be installed in the fireplace or the chimney venting the fireplace, and shall be operable from the room containing the fireplace.

R1001.8 Smoke chamber. Smoke chamber walls shall be constructed of solid masonry units, hollow masonry units grouted solid, stone or concrete. The total minimum thickness of front, back and side walls shall be 8 inches (203 mm) of solid masonry. The inside surface shall be parged smooth with refractory mortar conforming to ASTM C 199. When a lining of firebrick at least 2 inches (51 mm) thick, or a lining of vitrified clay at least $^5/_8$ inch (16 mm) thick, is provided, the total minimum thickness of front, back and side walls shall be 6 inches (152 mm) of solid masonry, including the lining. Firebrick shall conform to ASTM C 1261 and shall be laid with medium duty refractory mortar conforming to ASTM C 199. Vitrified clay linings shall conform to ASTM C 315.

R1001.8.1 Smoke chamber dimensions. The inside height of the smoke chamber from the fireplace throat to the beginning of the flue shall not be greater than the inside width of the fireplace opening. The inside surface of the smoke chamber shall not be inclined more than 45 degrees (0.79 rad) from vertical when prefabricated smoke chamber linings are used or when the smoke chamber walls are rolled or sloped rather than corbeled. When the inside surface of the smoke chamber is formed by corbeled masonry, the walls shall not be corbeled more than 30 degrees (0.52 rad) from vertical.

R1001.9 Hearth and hearth extension. Masonry fireplace hearths and hearth extensions shall be constructed of concrete or masonry, supported by noncombustible materials, and reinforced to carry their own weight and all imposed loads. No combustible material shall remain against the underside of hearths and hearth extensions after construction.

R1001.9.1 Hearth thickness. The minimum thickness of fireplace hearths shall be 4 inches (102 mm).

R1001.9.2 Hearth extension thickness. The minimum thickness of hearth extensions shall be 2 inches (51 mm).

Exception: When the bottom of the firebox opening is raised at least 8 inches (203 mm) above the top of the hearth extension, a hearth extension of not less than $^3/_8$-inch-thick (10 mm) brick, concrete, stone, tile or other approved noncombustible material is permitted.

R1001.10 Hearth extension dimensions. Hearth extensions shall extend at least 16 inches (406 mm) in front of and at least 8 inches (203 mm) beyond each side of the fireplace opening. Where the fireplace opening is 6 square feet (0.6 m^2) or larger, the hearth extension shall extend at least 20 inches (508 mm) in front of and at least 12 inches (305 mm) beyond each side of the fireplace opening.

R1001.11 Fireplace clearance. All wood beams, joists, studs and other combustible material shall have a clearance of not less than 2 inches (51 mm) from the front faces and sides of masonry fireplaces and not less than 4 inches (102 mm) from the back faces of masonry fireplaces. The air space shall not be filled, except to provide fire blocking in accordance with Section R1001.12.

Exceptions:

1. Masonry fireplaces listed and labeled for use in contact with combustibles in accordance with UL 127 and installed in accordance with the manufacturer's installation instructions are permitted to have combustible material in contact with their exterior surfaces.
2. When masonry fireplaces are part of masonry or concrete walls, combustible materials shall not be in contact with the masonry or concrete walls less than 12 inches (306 mm) from the inside surface of the nearest firebox lining.

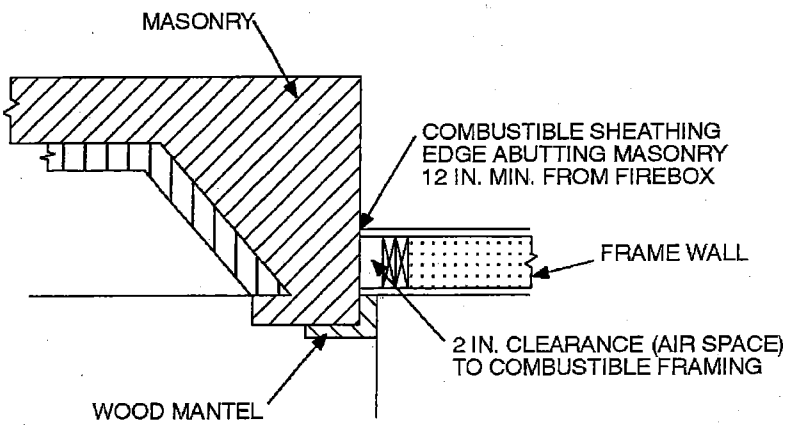

For SI: 1 inch = 25.4 mm.

FIGURE R1001.11
CLEARANCE FROM COMBUSTIBLES

3. Exposed combustible trim and the edges of sheathing materials such as wood siding, flooring and drywall shall be permitted to abut the masonry fireplace side walls and hearth extension in accordance with Figure R1001.11, provided such combustible trim or sheathing is a minimum of 12 inches (305 mm) from the inside surface of the nearest firebox lining.
4. Exposed combustible mantels or trim may be placed directly on the masonry fireplace front surrounding the fireplace opening providing such combustible materials are not placed within 6 inches (152 mm) of a fireplace opening. Combustible material within 12 inches (306 mm) of the fireplace opening shall not project more than $^1/_8$ inch (3 mm) for each 1-inch (25 mm) distance from such an opening.

R1001.12 Fireplace fireblocking. Fireplace fireblocking shall comply with the provisions of Section R602.8.

SECTION R1002
MASONRY HEATERS

R1002.1 Definition. A masonry heater is a heating appliance constructed of concrete or solid masonry, hereinafter referred to as masonry, which is designed to absorb and store heat from a solid-fuel fire built in the firebox by routing the exhaust gases through internal heat exchange channels in which the flow path downstream of the firebox may include flow in a horizontal or downward direction before entering the chimney and which delivers heat by radiation from the masonry surface of the heater.

R1002.2 Installation. Masonry heaters shall be installed in accordance with this section and comply with one of the following:

1. Masonry heaters shall comply with the requirements of ASTM E 1602; or
2. Masonry heaters shall be listed and labeled in accordance with UL 1482 and installed in accordance with the manufacturer's installation instructions.

R1002.3 Footings and foundation. The firebox floor of a masonry heater shall be a minimum thickness of 4 inches (102 mm) of noncombustible material and be supported on a noncombustible footing and foundation in accordance with Section R1003.2.

R1002.4 Seismic reinforcing. In Seismic Design Categories D_0, D_1 and D_2, masonry heaters shall be anchored to the masonry foundation in accordance with Section R1003.3. Seismic reinforcing shall not be required within the body of a masonry heater whose height is equal to or less than 3.5 times its body width and where the masonry chimney serving the heater is not supported by the body of the heater. Where the masonry chimney shares a common wall with the facing of the masonry heater, the chimney portion of the structure shall be reinforced in accordance with Section R1003.

R1002.5 Masonry heater clearance. Combustible materials shall not be placed within 36 inches (914 mm) of the outside surface of a masonry heater in accordance with NFPA 211 Section 8-7 (clearances for solid-fuel-burning appliances), and the required space between the heater and combustible material shall be fully vented to permit the free flow of air around all heater surfaces.

Exceptions:

1. When the masonry heater wall is at least 8 inches (203 mm) thick of solid masonry and the wall of the heat exchange channels is at least 5 inches (127 mm) thick of solid masonry, combustible materials shall not be placed within 4 inches (102 mm) of the outside surface of a masonry heater. A clearance of at least 8 inches (203 mm) shall be provided between the gas-tight capping slab of the heater and a combustible ceiling.
2. Masonry heaters listed and labeled in accordance with UL 1482 may be installed in accordance with the listing specifications and the manufacturer's written instructions.

SECTION R1003
MASONRY CHIMNEYS

R1003.1 Definition. A masonry chimney is a chimney constructed of solid masonry units, hollow masonry units grouted solid, stone or concrete, hereinafter referred to as masonry. Masonry chimneys shall be constructed, anchored, supported and reinforced as required in this chapter.

R1003.2 Footings and foundations. Footings for masonry chimneys shall be constructed of concrete or solid masonry at least 12 inches (305 mm) thick and shall extend at least 6 inches (152 mm) beyond the face of the foundation or support wall on all sides. Footings shall be founded on natural undisturbed earth or engineered fill below frost depth. In areas not subjected to freezing, footings shall be at least 12 inches (305 mm) below finished grade.

R1003.3 Seismic reinforcing. Masonry or concrete chimneys shall be constructed, anchored, supported and reinforced as required in this chapter. In *all structures regulated by this code assigned to* Seismic Design Category *C,* D_0, D_1 or D_2 masonry and concrete chimneys shall be reinforced and anchored as detailed in Section R1003.3.1, R1003.3.2 and R1003.4. In Seismic Design Category A *or* B, reinforcement and seismic anchorage is not required.

R1003.3.1 Vertical reinforcing. For chimneys up to 40 inches (1016 mm) wide, four No. 4 continuous vertical bars, anchored in the foundation, shall be placed in the concrete, or between wythes of solid masonry, or within the cells of hollow unit masonry, and grouted in accordance with Section R609.1.1. Grout shall be prevented from bonding with the flue liner so that the flue liner is free to move with thermal expansion. For chimneys more than 40 inches (1016 mm) wide, two additional No. 4 vertical bars shall be installed for each additional 40 inches (1016 mm) in width or fraction thereof.

R1003.3.2 Horizontal reinforcing. Vertical reinforcement shall be placed enclosed within $^1/_4$-inch (6 mm) ties, or other reinforcing of equivalent net cross-sectional area, spaced not to exceed 18 inches (457 mm) on center in concrete, or placed in the bed joints of unit masonry, at a min-

imum of every 18 inches (457 mm) of vertical height. Two such ties shall be installed at each bend in the vertical bars.

R1003.4 Seismic anchorage. Masonry and concrete chimneys and foundations in *all structures regulated by this code assigned to* Seismic Design Category *C*, D_0, D_1 or D_2 shall be anchored at each floor, ceiling or roof line more than 6 feet (1829 mm) above grade, except where constructed completely within the exterior walls. Anchorage shall conform to the requirements in Section R1003.4.1.

R1003.4.1 Anchorage. Two $^3/_{16}$-inch by 1-inch (5 mm by 25 mm) straps shall be embedded a minimum of 12 inches (305 mm) into the chimney. Straps shall be hooked around the outer bars and extend 6 inches (152 mm) beyond the bend. Each strap shall be fastened to a minimum of four floor joists with two $^1/_2$-inch (13 mm) bolts.

R1003.5 Corbeling. Masonry chimneys shall not be corbeled more than one-half of the chimney's wall thickness from a wall or foundation, nor shall a chimney be corbeled from a wall or foundation that is less than 12 inches (305 mm) thick unless it projects equally on each side of the wall, except that on the second story of a two-story dwelling, corbeling of chimneys on the exterior of the enclosing walls may equal the wall thickness. The projection of a single course shall not exceed one-half the unit height or one-third of the unit bed depth, whichever is less.

R1003.6 Changes in dimension. The chimney wall or chimney flue lining shall not change in size or shape within 6 inches (152 mm) above or below where the chimney passes through floor components, ceiling components or roof components.

R1003.7 Offsets. Where a masonry chimney is constructed with a fireclay flue liner surrounded by one wythe of masonry, the maximum offset shall be such that the centerline of the flue above the offset does not extend beyond the center of the chimney wall below the offset. Where the chimney offset is supported by masonry below the offset in an approved manner, the maximum offset limitations shall not apply. Each individual corbeled masonry course of the offset shall not exceed the projection limitations specified in Section R1003.5.

R1003.8 Additional load. Chimneys shall not support loads other than their own weight unless they are designed and constructed to support the additional load. Construction of masonry chimneys as part of the masonry walls or reinforced concrete walls of the building shall be permitted.

R1003.9 Termination. Chimneys shall extend at least 2 feet (610 mm) higher than any portion of a building within 10 feet (3048 mm), but shall not be less than 3 feet (914 mm) above the highest point where the chimney passes through the roof.

R1003.9.1 Chimney caps. Masonry chimneys shall have a concrete, metal or stone cap, sloped to shed water, a drip edge and a caulked bond break around any flue liners in accordance with ASTM C 1283.

R1003.9.2 Spark arrestors. *All chimneys attached to any appliance or fireplace that burns solid fuel shall be equipped with an approved spark arrester.* The spark arrestor shall meet all of the following requirements:

1. The net free area of the arrestor shall not be less than four times the net free area of the outlet of the chimney flue it serves.
2. The arrestor screen shall have heat and corrosion resistance equivalent to *12 gage wire,* 19-gage galvanized steel or 24-gage stainless steel.
3. Openings shall not permit the passage of spheres having a diameter greater than $^1/_2$ inch (13 mm) nor block the passage of spheres having a diameter less than $^3/_8$ inch (10 mm).
4. The spark arrestor shall be accessible for cleaning and the screen or chimney cap shall be removable to allow for cleaning of the chimney flue.

R1003.9.3 Rain caps. Where a masonry or metal rain cap is installed on a masonry chimney, the net free area under the cap shall not be less than four times the net free area of the outlet of the chimney flue it serves.

R1003.10 Wall thickness. Masonry chimney walls shall be constructed of solid masonry units or hollow masonry units grouted solid with not less than a 4-inch (102 mm) nominal thickness.

R1003.10.1 Masonry veneer chimneys. Where masonry is used to veneer a frame chimney, through-flashing and weep holes shall be installed as required by Section R703.

R1003.11 Flue lining (material). Masonry chimneys shall be lined. The lining material shall be appropriate for the type of appliance connected, according to the terms of the appliance listing and manufacturer's instructions.

R1003.11.1 Residential-type appliances (general). Flue lining systems shall comply with one of the following:

1. Clay flue lining complying with the requirements of ASTM C 315.
2. Listed and labeled chimney lining systems complying with UL 1777.
3. Factory-built chimneys or chimney units listed for installation within masonry chimneys.
4. Other approved materials that will resist corrosion, erosion, softening or cracking from flue gases and condensate at temperatures up to 1,800°F (982°C).

R1003.11.2 Flue linings for specific appliances. Flue linings other than these covered in Section R1003.11.1, intended for use with specific types of appliances, shall comply with Sections R1003.11.3 through R1003.11.6.

R1003.11.3 Gas appliances. Flue lining systems for gas appliances shall be in accordance with *the California Mechanical Code.*

R1003.11.4 Pellet fuel-burning appliances. Flue lining and vent systems for use in masonry chimneys with pellet fuel-burning appliances shall be limited to the following:

1. Flue lining systems complying with Section R1003.11.1.
2. Pellet vents listed for installation within masonry chimneys. (See Section R1003.11.6 for marking.)

R1003.11.5 Oil-fired appliances approved for use with Type L vent. Flue lining and vent systems for use in masonry chimneys with oil-fired appliances approved for use with Type L vent shall be limited to the following:

1. Flue lining systems complying with Section R1003.11.1.
2. Listed chimney liners complying with UL 641. (See Section R1003.11.6 for marking.)

R1003.11.6 Notice of usage. When a flue is relined with a material not complying with Section R1003.11.1, the chimney shall be plainly and permanently identified by a label attached to a wall, ceiling or other conspicuous location adjacent to where the connector enters the chimney. The label shall include the following message or equivalent language:

THIS CHIMNEY FLUE IS FOR USE ONLY WITH [TYPE OR CATEGORY OF APPLIANCE] APPLIANCES THAT BURN [TYPE OF FUEL]. DO NOT CONNECT OTHER TYPES OF APPLIANCES.

R1003.12 Clay flue lining (installation). Clay flue liners shall be installed in accordance with ASTM C 1283 and extend from a point not less than 8 inches (203 mm) below the lowest inlet or, in the case of fireplaces, from the top of the smoke chamber to a point above the enclosing walls. The lining shall be carried up vertically, with a maximum slope no greater than 30 degrees (0.52 rad) from the vertical.

Clay flue liners shall be laid in medium-duty water insoluble refractory mortar conforming to ASTM C 199 with tight mortar joints left smooth on the inside and installed to maintain an air space or insulation not to exceed the thickness of the flue liner separating the flue liners from the interior face of the chimney masonry walls. Flue liners shall be supported on all sides. Only enough mortar shall be placed to make the joint and hold the liners in position.

R1003.12.1 Listed materials. Listed materials used as flue linings shall be installed in accordance with the terms of their listings and manufacturer's instructions.

R1003.12.2 Space around lining. The space surrounding a chimney lining system or vent installed within a masonry chimney shall not be used to vent any other appliance.

Exception: This shall not prevent the installation of a separate flue lining in accordance with the manufacturer's installation instructions.

R1003.13 Multiple flues. When two or more flues are located in the same chimney, masonry wythes shall be built between adjacent flue linings. The masonry wythes shall be at least 4 inches (102 mm) thick and bonded into the walls of the chimney.

Exception: When venting only one appliance, two flues may adjoin each other in the same chimney with only the flue lining separation between them. The joints of the adjacent flue linings shall be staggered at least 4 inches (102 mm).

R1003.14 Flue area (appliance). Chimney flues shall not be smaller in area than that of the area of the connector from the appliance [see Tables R1003.14(1) and R1003.14(2)]. The sizing of a chimney flue to which multiple appliance venting systems are connected shall be in accordance with the *California Mechanical Code*.

TABLE R1003.14(1)
NET CROSS-SECTIONAL AREA OF ROUND FLUE SIZES[a]

FLUE SIZE, INSIDE DIAMETER (inches)	CROSS-SECTIONAL AREA (square inches)
6	28
7	38
8	50
10	78
$10^{3}/_{4}$	90
12	113
15	176
18	254

For SI: 1 inch = 25.4 mm, 1 square inch = 645.16 mm^2.
a. Flue sizes are based on ASTM C 315.

TABLE R1003.14(2)
NET CROSS-SECTIONAL AREA OF SQUARE AND RECTANGULAR FLUE SIZES

FLUE SIZE, OUTSIDE NOMINAL DIMENSIONS (inches)	CROSS-SECTIONAL AREA (square inches)
4.5 × 8.5	23
4.5 × 13	34
8 × 8	42
8.5 × 8.5	49
8 × 12	67
8.5 × 13	76
12 × 12	102
8.5 × 18	101
13 × 13	127
12 × 16	131
13 × 18	173
16 × 16	181
16 × 20	222
18 × 18	233
20 × 20	298
20 × 24	335
24 × 24	431

For SI: 1 inch = 25.4 mm, 1 square inch = 645.16 mm^2.

R1003.15 Flue area (masonry fireplace). Flue sizing for chimneys serving fireplaces shall be in accordance with Section R1003.15.1 or Section R1003.15.2.

R1003.15.1 Option 1. Round chimney flues shall have a minimum net cross-sectional area of at least $^{1}/_{12}$ of the fireplace opening. Square chimney flues shall have a minimum net cross-sectional area of $^{1}/_{10}$ of the fireplace opening. Rectangular chimney flues with an aspect ratio less than 2 to 1 shall have a minimum net cross-sectional area of $^{1}/_{10}$ of the fireplace opening. Rectangular chimney

flues with an aspect ratio of 2 to 1 or more shall have a minimum net cross-sectional area of $^1/_8$ of the fireplace opening. Cross-sectional areas of clay flue linings are shown in Tables R1O03.14(1) and R1003.14(2) or as provided by the manufacturer or as measured in the field.

R1003.15.2 Option 2. The minimum net cross-sectional area of the chimney flue shall be determined in accordance with Figure R1003.15.2. A flue size providing at least the equivalent net cross-sectional area shall be used. Cross-sectional areas of clay flue linings are shown in Tables R1003.14(1) and R1O03.14(2) or as provided by the manufacturer or as measured in the field. The height of the chimney shall be measured from the firebox floor to the top of the chimney flue.

R1003.16 Inlet. Inlets to masonry chimneys shall enter from the side. Inlets shall have a thimble of fireclay, rigid refractory material or metal that will prevent the connector from pulling out of the inlet or from extending beyond the wall of the liner.

R1003.17 Masonry chimney cleanout openings. Cleanout openings shall be provided within 6 inches (152 mm) of the base of each flue within every masonry chimney. The upper edge of the cleanout shall be located at least 6 inches (152 mm) below the lowest chimney inlet opening. The height of the opening shall be at least 6 inches (152 mm). The cleanout shall be provided with a noncombustible cover.

Exception: Chimney flues serving masonry fireplaces where cleaning is possible through the fireplace opening.

R1003.18 Chimney clearances. Any portion of a masonry chimney located in the interior of the building or within the exterior wall of the building shall have a minimum air space clearance to combustibles of 2 inches (51 mm). Chimneys located entirely outside the exterior walls of the building, including chimneys that pass through the soffit or cornice,

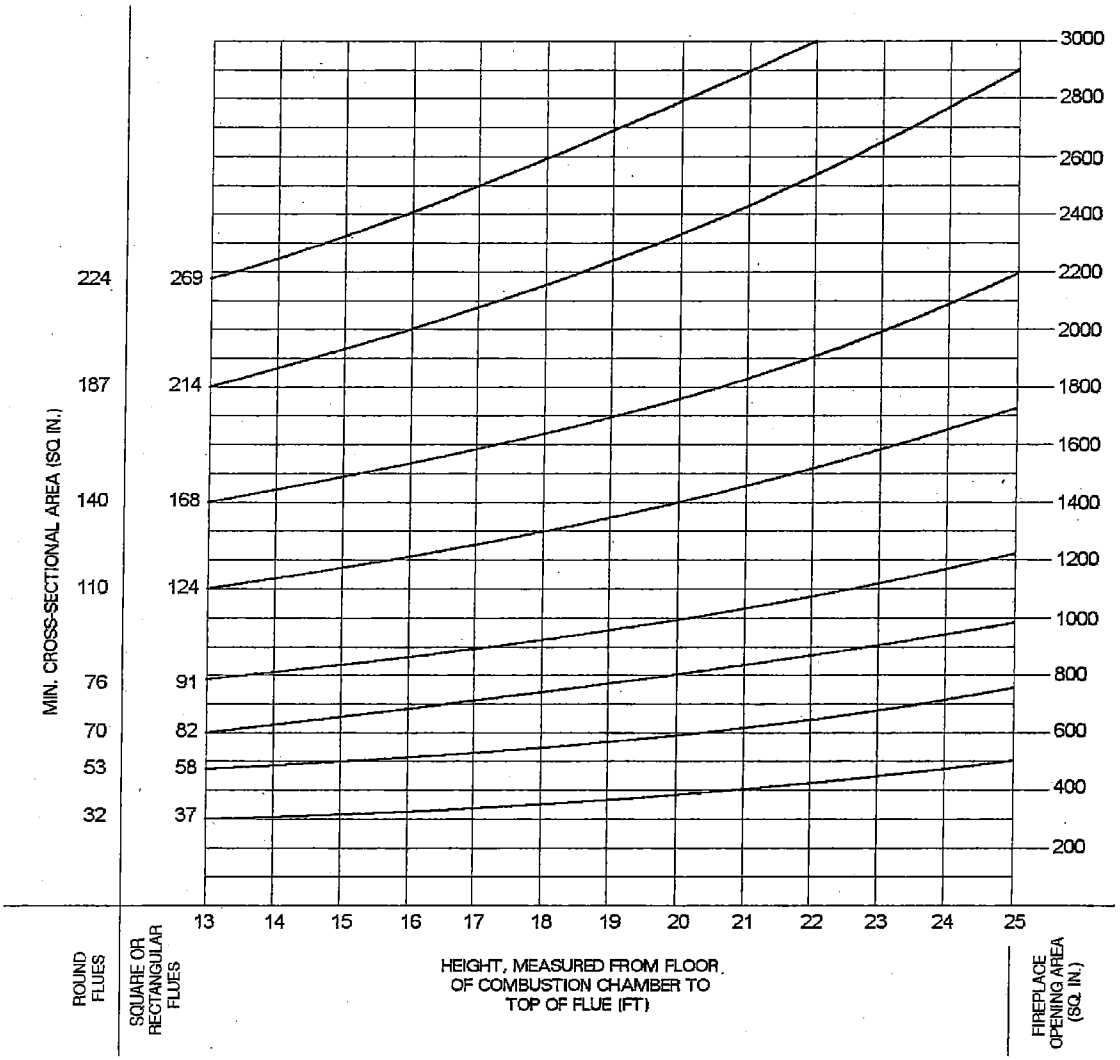

For SI: 1 foot = 304.8 mm, 1 square inch = 645.16 mm^2.

FIGURE R1003.15.2
FLUE SIZES FOR MASONRY CHIMNEYS

shall have a minimum air space clearance of 1 inch (25 mm). The air space shall not be filled, except to provide fire blocking in accordance with Section R1003.19.

Exceptions:

1. Masonry chimneys equipped with a chimney lining system listed and labeled for use in chimneys in contact with combustibles in accordance with UL 1777 and installed in accordance with the manufacturer's installation instructions are permitted to have combustible material in contact with their exterior surfaces.
2. When masonry chimneys are constructed as part of masonry or concrete walls, combustible materials shall not be in contact with the masonry or concrete wall less than 12 inches (305 mm) from the inside surface of the nearest flue lining.
3. Exposed combustible trim and the edges of sheathing materials, such as wood siding and flooring, shall be permitted to abut the masonry chimney side walls, in accordance with Figure R1003.18, provided such combustible trim or sheathing is a minimum of 12 inches (305 mm) from the inside surface of the nearest flue lining. Combustible material and trim shall not overlap the corners of the chimney by more than 1 inch (25 mm).

R1003.19 Chimney fireblocking. All spaces between chimneys and floors and ceilings through which chimneys pass shall be fireblocked with noncombustible material securely fastened in place. The fireblocking of spaces between chimneys and wood joists, beams or headers shall be self-supporting or be placed on strips of metal or metal lath laid across the spaces between combustible material and the chimney.

R1003.20 Chimney crickets. Chimneys shall be provided with crickets when the dimension parallel to the ridgeline is greater than 30 inches (762 mm) and does not intersect the ridgeline. The intersection of the cricket and the chimney shall be flashed and counterflashed in the same manner as normal roof-chimney intersections. Crickets shall be constructed in compliance with Figure R1003.20 and Table R1003.20.

TABLE R1003.20
CRICKET DIMENSIONS

ROOF SLOPE	H
12 - 12	$^1/_2$ of W
8 - 12	$^1/_3$ of W
6 - 12	$^1/_4$ of W
4 - 12	$^1/_6$ of W
3 - 12	$^1/_8$ of W

SECTION R1004
FACTORY-BUILT FIREPLACES

R1004.1 General. Factory-built fireplaces shall be listed and labeled and shall be installed in accordance with the conditions of the listing. Factory-built fireplaces shall be tested in accordance with UL 127.

R1004.2 Hearth extensions. Hearth extensions of approved factory-built fireplaces shall be installed in accordance with the listing of the fireplace. The hearth extension shall be readily distinguishable from the surrounding floor area. Listed and labeled hearth extensions shall comply with UL 1618.

R1004.3 Decorative shrouds. Decorative shrouds shall not be installed at the termination of chimneys for factory-built fireplaces except where the shrouds are listed and labeled for use with the specific factory-built fireplace system and installed in accordance with the manufacturer's installation instructions.

SECTION R1005
FACTORY-BUILT CHIMNEYS

R1005.1 Listing. Factory-built chimneys shall be listed and labeled and shall be installed and terminated in accordance with the manufacturer's installation instructions.

R1005.2 Decorative shrouds. Decorative shrouds shall not be installed at the termination of factory-built chimneys except where the shrouds are listed and labeled for use with the specific factory-built chimney system and installed in accordance with the manufacturer's installation instructions.

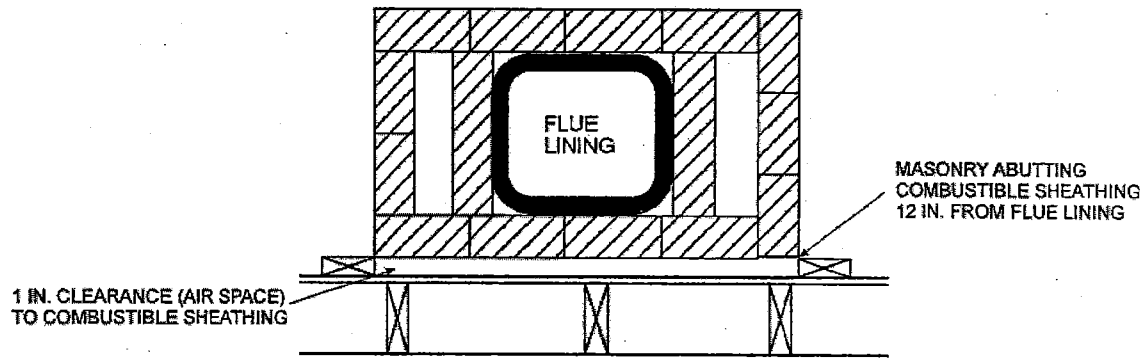

For SI: 1 inch = 25.4 mm.

FIGURE R1003.18
CLEARANCE FROM COMBUSTIBLES

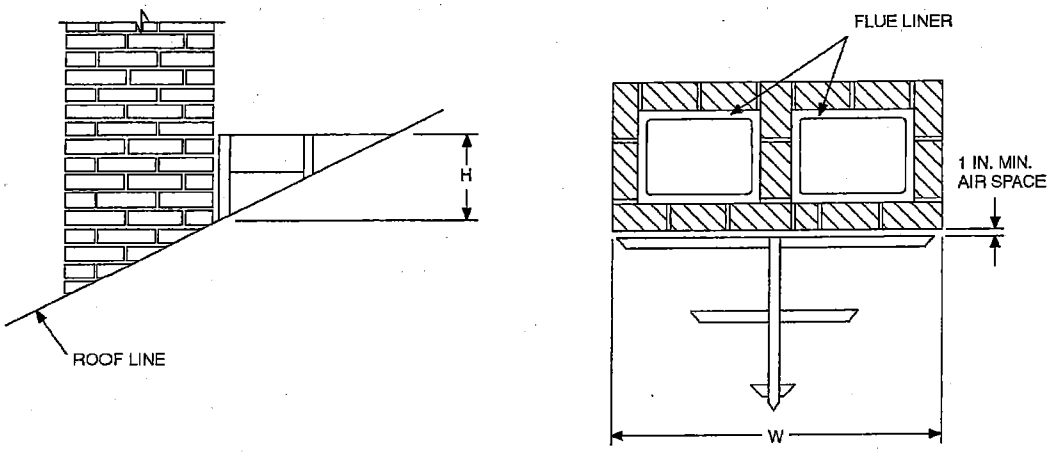

For SI: 1 inch = 25.4 mm.

FIGURE R1003.20
CHIMNEY CRICKET

R1005.3 Solid-fuel appliances. Factory-built chimneys installed in dwelling units with solid-fuel-burning appliances shall comply with the Type HT requirements of UL 103 and shall be marked "Type HT and "Residential Type and Building Heating Appliance Chimney."

Exception: Chimneys for use with open combustion chamber fireplaces shall comply with the requirements of UL 103 and shall be marked "Residential Type and Building Heating Appliance Chimney."

Chimneys for use with open combustion chamber appliances installed in buildings other than dwelling units shall comply with the requirements of UL 103 and shall be marked "Building Heating Appliance Chimney" or "Residential Type and Building Heating Appliance Chimney."

R1005.4 Factory-built fireplaces. Chimneys for use with factory-built fireplaces shall comply with the requirements of UL 127.

R1005.5 Support. Where factory-built chimneys are supported by structural members, such as joists and rafters, those members shall be designed to support the additional load.

R1005.6 Medium-heat appliances. Factory-built chimneys for medium-heat appliances producing flue gases having a temperature above 1,000°F (538°C), measured at the entrance to the chimney shall comply with UL 959.

R1005.7 Factory-built chimney offsets. Where a factory-built chimney assembly incorporates offsets, no part of the chimney shall be at an angle of more than 30 degrees from vertical at any point in the assembly and the chimney assembly shall not include more than four elbows.

SECTION R1006
EXTERIOR AIR SUPPLY

R1006.1 Exterior air. Factory-built or masonry fireplaces covered in this chapter shall be equipped with an exterior air supply to assure proper fuel combustion unless the room is mechanically ventilated and controlled so that the indoor pressure is neutral or positive.

R1006.1.1 Factory-built fireplaces. Exterior combustion air ducts for factory-built fireplaces shall be a *listed* component of the fireplace and shall be installed according to the fireplace manufacturer's instructions.

R1006.1.2 Masonry fireplaces. Listed combustion air ducts for masonry fireplaces shall be installed according to the terms of their listing and the manufacturer's instructions.

R1006.2 Exterior air intake. The exterior air intake shall be capable of supplying all combustion air from the exterior of the dwelling or from spaces within the dwelling ventilated with outside air such as nonmechanically ventilated crawl or attic spaces. The exterior air intake shall not be located within the garage or basement of the dwelling nor shall the air intake be located at an elevation higher than the firebox. The exterior air intake shall be covered with a corrosion-resistant screen of $^1/_4$-inch (6 mm) mesh.

R1006.3 Clearance. Unlisted combustion air ducts shall be installed with a minimum 1-inch (25 mm) clearance to combustibles for all parts of the duct within 5 feet (1524 mm) of the duct outlet.

R1006.4 Passageway. The combustion air passageway shall be a minimum of 6 square inches (3870 mm^2) and not more than 55 square inches (0.035 m^2), except that combustion air systems for listed fireplaces shall be constructed according to the fireplace manufacturer's instructions.

R1006.5 Outlet. Locating the exterior air outlet in the back or sides of the firebox chamber or within 24 inches (610 mm) of the firebox opening on or near the floor is permitted. The outlet shall be closable and designed to prevent burning material from dropping into concealed combustible spaces.

Part IV—Energy Conservation

(Note: Part IV is not adopted. See California Energy Code, Title 24, Part 6.)

Part V—Mechanical

(Note: Part V is not adopted. See California Mechanical Code, Title 24, Part 4.)

Part VI—Fuel Gas

(Note: Part VI is not adopted. See California Mechanical Code and California Plumbing Code, Title 24, Parts 4 and 5.)

Part VII—Plumbing

(Note: Part VII is not adopted. See California Plumbing Code, Title 24, Part 5.)

Part VIII—Electrical

(Note: Part VIII is not adopted. See California Electrical Code, Title 24, Part 3.)

CALIFORNIA RESIDENTIAL CODE – MATRIX ADOPTION TABLE
CHAPTER 44 – REFERENCED STANDARDS

(Matrix Adoption Tables are non-regulatory, intended only as an aid to the user.
See Chapter 1 for state agency authority and building applications.)

Adopting agency	BSC	SFM	HCD			DSA		OSHPD				BSCC	DHS	AGR	DWR	CEC	CA	SL	SLC
			1	2	1/AC	AC	SS	1	2	3	4								
Adopt entire chapter																			
Adopt entire chapter as amended (amended sections listed below)		X	X	X															
Adopt only those sections that are listed below																			
Chapter / Section																			
ANSI		X																	
ASTM		X																	
ICC		X																	
NFPA		X																	
NFPA 720-09			X	X															
SFM		X																	
UBC		X																	

* The California Code of Regulations (CCR), Title 19, Division 1 provisions that are found in the *California Fire Code* are a reprint from the current CCR, Title 19, Division 1 text for the code user's convenience only. The scope, applicability and appeals procedures of CCR, Title 19, Division I remain the same.

Part IX—Referenced Standards

CHAPTER 44

REFERENCED STANDARDS

This chapter lists the standards that are referenced in various sections of this document. The standards are listed herein by the promulgating agency of the standard, the standard identification, the effective date and title, and the section or sections of this document that reference the standard. The application of the referenced standards shall be as specified in Section R102.4.

AAMA

American Architectural Manufacturers Association
1827 Walden Office Square, Suite 550
Schaumburg, IL 60173

Standard reference number	Title	Referenced in code section number
AAMA/WDMA/CSA 101/I.S.2/A440—11	North American Fenestration Standards/Specifications for Windows, Doors and Skylights	R308.6.9, R612.3, N1102.4.3
450—09	Voluntary Performance Rating Method for Mulled Fenestration Assemblies	R612.8
506—08	Voluntary Specifications for Hurricane Impact and Cycle Testing of Fenestration Products	R612.6.1
711—07	Voluntary Specification for Self-adhering Flashing Used for Installation of Exterior Wall Fenestration Products	R703.8

ACI

American Concrete Institute
38800 Country Club Drive
Farmington Hills, MI 48331

Standard reference number	Title	Referenced in code section number
318—11	Building Code Requirements for Structural Concrete	R301.2.2.2.4, R301.2.2.3.4, Table R402.1.2(2), R402.2, R404.1.2, Table R404.1.2(5), Table R404.1.2(7), Table R404.1.2(8), Table R404.1.2(9), R404.1.2.1, R404.1.2.3, R404.1.2.4, R404.1.4.2, R404.5.1, R611.1, R611.1.1, R611.1.2, R611.2, R611.5.1, R611.6.1, R611.8.2, R611.9.2, R611.9.3
332—10	Code Requirements for Residential Concrete Construction	R402.2, R403.1, R404.1.2, R404.1.2.4, R404.1.4.2, R506.1
530—11	Building Code Requirements for Masonry Structures	R404.1.1, R606.1, R606.1.1, R606.12.1, R606.12.2.2.2, R606.12.2.3.1, R606.12.3.1, Table R703.4
530.1—11	Specification for Masonry Structures	R404.1.1, R606.1, R606.1.1, R606.12.1, R606.12.2.2.1, R606.12.2.2.2, R606.12.3.1, Table R703.4

ACCA

Air Conditioning Contractors of America
2800 Shirlington Road, Suite 300
Arlington, VA 22206

Standard reference number	Title	Referenced in code section number
Manual D—09	Residential Duct Systems	M1601.1, M1602.2
Manual J—11	Residential Load Calculation—Eighth Edition	N1103.6, M1401.3
Manual S—10	Residential Equipment Selection	N1103.6, M1401.3

AFPA

American Forest and Paper Association
1111 19th Street, NW, Suite 800
Washington, DC 20036

Standard reference number	Title	Referenced in code section number
AFPA—2012	Span Tables for Joists and Rafters	R502.3, R802.4, R802.5
ANSI/AF&PA WFCM—2012	Wood Frame Construction Manual for One- and Two-family Dwellings	R301.1.1, R301.2.1.1, R611.9.2, R611.9.3, R611.10
NDS—2012	National Design Specification (NDS) for Wood Construction—with 2005 Supplement	R404.2.2, R502.2, Table R503.1, R602.3, Table R602.3.1, R611.9.2, R611.9.3, R802.2
PWF—2007	Permanent Wood Foundation Design Specification	R401.1, R404.2.3

AISI

American Iron and Steel Institute
1140 Connecticut Ave, Suite 705
Washington, DC 20036

Standard reference number	Title	Referenced in code section number
AISI S100—07/S2—10	North American Specification for the Design of Cold-formed Steel Structural Members, with Supplement 2, dated 2010	R505.1.3, R603.6, R611.9.2, R611.9.3, R804.3.7
AISI S230—07/S2—08	Standard for Cold-formed Steel Framing—Prescriptive Method for One- and Two-family Dwellings, with Supplement 2, dated 2008	R301.1.1, R301.2.1.1, R301.2.2.3.1, R301.2.2.3.5, R603.6, R603.9.4.1, R603.9.4.2, R611.9.2, R611.9.3, R611.10

AITC

American Institute of Timber Construction
7012 S. Revere Parkway, Suite 140
Centennial, CO 80112

Standard reference number	Title	Referenced in code section number
ANSI/AITC A 190.1—07	Structural Glued-laminated Timber	R502.1.5, R602.1.2, R802.1.4

ANSI

American National Standards Institute
25 West 43rd Street, Fourth Floor
New York, NY 10036

Standard reference number	Title	Referenced in code section number
A108.1A—99	Installation of Ceramic Tile in the Wet-set Method, with Portland Cement Mortar	R702.4.1
A108.1B—99	Installation of Ceramic Tile, Quarry Tile on a Cured Portland Cement Mortar Setting Bed with Dry-set or Latex Portland Mortar	R702.4.1
A108.4—99	Installation of Ceramic Tile with Organic Adhesives or Water-Cleanable Tile-setting Epoxy Adhesive	R702.4.1
A108.5—99	Installation of Ceramic Tile with Dry-set Portland Cement Mortar or Latex Portland Cement Mortar	R702.4.1
A108.6—99	Installation of Ceramic Tile with Chemical-resistant, Water-cleanable Tile-setting and -grouting Epoxy	R702.4.1
A108.11—99	Interior Installation of Cementitious Backer Units	R702.4.1
A118.1—99	American National Standard Specifications for Dry-set Portland Cement Mortar	R702.4.1
A118.3—99	American National Standard Specifications for Chemical-resistant, Water-cleanable Tile-setting and -grouting Epoxy, and Water-cleanable Tile-setting Epoxy Adhesive	R702.4.1
A118.10—99	Specification for Load-bearing, Bonded, Waterproof Membranes for Thin-set Ceramic Tile and Dimension Stone Installation	P2709.2 , P2709.2.4

ANSI—continued

A136.1—99	American National Standard Specifications for Organic Adhesives for Installation of Ceramic Tile	R702.4.1
A137.1—88	American National Standard Specifications for Ceramic Tile	R702.4.1
A208.1—2009	Particleboard	R503.3.1, R605.1
LC1/CSA 6.26—05	Fuel Gas Piping Systems Using Corrugated Stainless Steel Tubing (CSST)	G2414.5.3
LC4—07	Press-connect Copper and Copper-alloy Fittings for Use in Fuel Gas Distribution Systems	G2414.10.2
S3.41	*American National Standard Audible Evacuation Signal*	*R325.5.2.1*
Z21.1—05	Household Cooking Gas Appliances	G2447.1
Z21.5.1/CSA 7.1—06	Gas Clothes Dryers—Volume I—Type I Clothes Dryers	G2438.1
Z21.8—94 (R2002)	Installation of Domestic Gas Conversion Burners	G2443.1
Z21.10.1/CSA 4.1—09	Gas Water Heaters—Volume I—Storage Water Heaters with Input Ratings of 75,000 Btu per hour or Less	G2448.1
Z21.10.3/CSA 4.3—04	Gas Water Heaters—Volume III—Storage Water Heaters with Input Ratings above 75,000 Btu per hour, Circulating and Instantaneous	G2448.1
Z21.11.2—07	Gas-fired Room Heaters—Volume II—Unvented Room Heaters	G2445.1
Z21.13/CSA 4.9—10	Gas-fired Low-pressure Steam and Hot Water Boilers	G2452.1
Z21.15/CSA 9.1—09	Manually Operated Gas Valves for Appliances, Appliance Connector Valves and Hose End Valves	Table G2420.1.1
Z21.22—99 (R2003)	Relief Valves for Hot Water Supply Systems—with Addenda Z21.22a—2000 (R2003) and 21.22b—2001 (R2003)	P2803.2, P2803.7
Z21.24—97	Connectors for Gas Appliances	G2422.1
Z21.40.1/ CSA 2.91—96 (R2002)	Gas-fired, Heat-activated Air-conditioning and Heat Pump Appliances	G2449.1
Z21.40.2/ CSA 2.92—96 (R2002)	Gas-fired, Work-activated Air-conditioning and Heat Pump Appliances (Internal Combustion)	G2449.1
Z21.42—93 (R2002)	Gas-fired Illuminating Appliances	G2450.1
Z21.47/CSA 2.3—06	Gas-fired Central Furnaces	G2442.1
Z21.50/CSA 2.22—07	Vented Gas Fireplaces	G2434.1
Z21.56/CSA 4.7—06	Gas-fired Pool Heaters	G2441.1
Z21.58—95/CSA 1.6—07	Outdoor Cooking Gas Appliances	G2447.1
Z21.60/CSA 2.26—03	Decorative Gas Appliances for Installation in Solid Fue-burning Fireplaces	G2432.1
Z21.75/CSA 6.27—07	Connectors for Outdoor Gas Appliances	G2422.1
Z21.80—03	Line Pressure Regulators	G2421.1
Z21.83—98	Fuel Cell Power Plants	M1903.1
Z21.84—02	Manually Listed, Natural Gas Decorative Gas Appliances for Installation in Solid Fuel-burning Fireplaces—with Addenda Z21.84a—2003	G2432.1, G2432.2
Z21.86—04	Gas-fired Vented Space Heating Appliances	G2436.1, G2437.1, G2446.1
Z21.88—02	Vented Gas Fireplace Heaters—with Addenda A21.88a—2003 and Z21.88b—2004	G2435.1
Z21.91—01	Ventless Firebox Enclosures for Gas-fired Unvented Decorative Room Heaters	G2445.7.1
Z21.97—09	Outdoor Decorative Appliances	G2454.1
Z83.6—90 (R1998)	Gas-fired Infrared Heaters	G2451.1
Z83.8—02	Gas-fired Unit Heaters and Gas-fired Duct Furnaces—with Addenda Z83.8a—2003	G2444.1
Z83.19—01 (R2005)	Gas-fuel High-intensity Infrared Heaters	G2451.1
Z83.20—08	Gas-fired Low-intensity Infared Heaters Outdoor Decorative Appliances	G2451.1
Z97.1—09	Safety Glazing Materials Used in Buildings—Safety Performance Specifications and Methods of Test	R308.1.1, R308.3.1
Z124.1—95	Plastic Bathtub Units	Table P2701.1
Z124.2—95	Plastic Shower Receptors and Shower Stalls	Table P2701.1
Z124.3—95	Plastic Lavatories	Table P2701.1, P2711.1, P2711.2
Z124.4—96	Plastic Water Closet Bowls and Tanks	Table P2701.1, P2712.1
Z124.6—97	Plastic Sinks	Table P2701.1

APA

APA—The Engineered Wood Association
7011 South 19th
Tacoma, WA 98466

Standard reference number	Title	Referenced in code section number
ANSI/APA PRP 210—08	Standard for Performance-rated Engineered Wood Siding	R604.1, Table R703.4
APA E30—03	Engineered Wood Construction Guide	Table R503.2.1.1(1), R503.2.2, R803.2.2, R803.2.3

APSP

The Association of Pool & Spa Professionals
2111 Eisenhower Avenue
Alexandria, VA 22314

Standard reference number	Title	Referenced in code section number
ANSI/APSP 7—06	Standard for Suction Entrapment Avoidance in Swimming Pools Wading Pools, Spas, Hot Tubs and Catch Basins	AG106.1
ANSI/NSPI 3—99	Standard for Permanently Installed Residential Spas	AG104.1
ANSI/NSPI 4—2007	Standard for Above-ground/On-ground Residential Swimming Pools	AG103.2
ANSI/NSPI 5—2003	Standard for Residential In-ground Swimming Pools	AG103.1
ANSI/NSPI 6—99	Standard for Residential Portable Spas	AG104.2

ASCE/SEI

American Society of Civil Engineers
Structural Engineering Institute
1801 Alexander Bell Drive
Reston, VA 20191

Standard reference number	Title	Referenced in code section number
7—10	Minimum Design Loads for Buildings and Other Structures	R301.2.1.1, R301.2.1.2, R301.2.1.5, R301.2.1.5.1, Table R611.6(1), Table R611.6(2), Table R611.6(3), Table R611.6(4), Table R611.7(1A), R611.9.2, R611.9.3, Table R802.11, AH107.4.3
24—05	Flood-resistant Design and Construction	R301.2.4, R301.2.4.1, R322.1, R322.1.1, R322.1.6, R322.1.9, R322.2.2, R3223.3, AG103.3
32—01	Design and Construction of Frost-protected Shallow Foundations	R403.1.4.1
402—11	Building Code Requirements for Masonry Structures	R404.1.1, R606.1, R606.1.1, R606.12.1, R606.12.2.2.1, R606.12.2.2.2, R606.12.3.1, Table R703.4
602—11	Specification for Masonry Structures	R606.1, R606.1.1, R606.12.1, R606.12.2.2.1, R606.12.2.2.2, R606.12.3.1, Table R703.4

ASHRAE

American Society of Heating, Refrigerating and Air-Conditioning Engineers, Inc.
1791 Tullie Circle, NE
Atlanta, GA 30329

Standard reference number	Title	Referenced in code section number
ASHRAE—2009	ASHRAE Handbook of Fundamentals	N1102.1.4, Table N1105.5.2(1), P3001.2, P3101.4, P3103.2
ASHRAE 193—2010	Method of Test for Determining Air Tightness of HVAC Equipment	N1103.2.2.1
34—2010	Designation and Safety Classification of Refrigerants	M1411.1

ASME

American Society of Mechanical Engineers
Three Park Avenue
New York, NY 10016-5990

Standard reference number	Title	Referenced in code section number
ASME/A17.1—2007/ CSA B44—2007	Safety Code for Elevators and Escalators—with A17.1a/CSA B44a—08 Addenda	R321.1
A18.1—2008	Safety Standard for Platforms and Stairway Chair Lifts	R321.2
A112.1.2—2004	Air Gaps in Plumbing Systems	Table P2902.3, P2902.3.1
A112.1.3—2000 (Reaffirmed 2005)	Air Gap Fittings for Use with Plumbing Fixtures, Appliances and Appurtenances	Table P2701.1, P2902.3.1

ASME—continued

A112.3.1—2007	Stainless Steel Drainage Systems for Sanitary, DWV, Storm and Vacuum Applications Above and Below Ground.....Table P3002.1(1), Table P3002.1(2), Table P3002.2, Table P3002.3, Table P3302.1
A112.3.4—2000 (R2004)	Macerating Toilet Systems and Related Components.....Table P2701.1, P3007.5
A112.4.1—1993 (R2002)	Water Heater Relief Valve Drain Tubes.....P2803.6.1
A112.4.2—2003 (R2008)	Water-closet Personal Hygiene Devices.....P2722.5
A112.4.3—1999 (R2004)	Plastic Fittings for Connecting Water Closets to the Sanitary Drainage System.....P3003.19
A112.6.1M—1997 (R2002)	Floor-affixed Supports for Off-the-floor Plumbing Fixtures for Public Use.....Table P2701.1, P2702.4
A112.6.2—2000 (R2004)	Framing-affixed Supports for Off-the-floor Water Closets with Concealed Tanks.....Table P2701.1, P2702.4
A112.6.3—2001 (R2007)	Floor and Trench Drains.....Table P2701.1
A112.14.1—03 (Reaffirmed 2008)	Backwater Valves.....P3008.2
A112.18.1—2005/ CSA B125.1—2010	Plumbing Supply Fittings.....Table P2701.1, P2708.4, P2708.5, P2722.1, P2902.2
A112.18.2—2005/ CSA B125.2—2005	Plumbing Waste Fittings with 2007 and 2008 Supplements.....Table P2701.1, P2702.2
A112.18.3—2002 (Reaffirmed 2008)	Performance Requirements for Backflow Protection Devices and Systems in Plumbing Fixture Fittings.....P2708.4, P2722.3
A112.18.6/ CSA B125.6—2009	Flexible Water Connectors.....P2905.7
A112.19.1M/ CSA B45.2—2008	Enameled Cast-iron and Enameled Steel Plumbing Fixtures.....Table P2701.1, P2711.1
A112.19.2—2008/ CSA B45.1—2008	Ceramic Plumbing Fixtures.....Table P2701.1, P2705.1, P2711.1, P2712.1, P2712.2, P2712.9
A112.19.3—2008/ CSA B45.4—2008	Stainless Steel Plumbing Fixtures.....Table P2701.1, P2705.1, P2711.1, P2712.1
A112.19.4M—1994 (R2004)	Porcelain-enameled-formed Steel Plumbing Fixtures—with 1998 and 2000 Supplements.....Table P2701.1, P2711.1
A112.19.5/ CSA B45.X—2009	Trim for Water-closet Bowls, Tanks and Urinals.....Table P2701.1
A112.19.7/ CSA B45.10—2009	Hydromassage Bathtub Appliances.....Table P2701.1
A112.19.12—2006	Wall-mounted and Pedestal-mounted, Adjustable and Pivoting Lavatory and Sink Carrier Systems.....Table P2701.1, P2711.4, P2714.2
A112.19.15—2005	Bathtub/Whirlpool Bathtubs with Pressure-sealed Doors.....Table P2701.1, P2713.2
B1.20.1—1983 (R2006)	Pipe Threads, General-purpose (Inch).....G2414.9, P3003.3.3, P3003.5.3, P3003.10.4, P3003.12.1, P3003.14.3
B16.3—2006	Malleable-iron-threaded Fittings, Classes 150 and 300.....Table P2905.6
B16.4—2006	Gray-iron-threaded Fittings Classes, 125 and 250.....Table P2905.6, Table P3002.3
B16.9—2007	Factory-made, Wrought-steel Buttwelding Fittings.....Table P2905.6
B16.11—2005	Forged Fittings, Socket-welding and Threaded.....Table P2905.6
B16.12—1998	Cast-iron-threaded Drainage Fittings.....Table P2905.6, Table P3002.3(R2006)
B16.15—2006	Cast-bronze-threaded Fittings.....Table P2905.6, Table P3002.3
B16.18—2001 (R2005)	Cast-copper-alloy Solder Joint Pressure Fittings.....Table P2905.6, Table P3002.3
B16.22—2001(R2005)	Wrought-copper and Copper-alloy Solder Joint Pressure Fittings.....Table P2905.6, Table P3002.3
B16.23—2002 (R2006)	Cast-copper-alloy Solder Joint Drainage Fittings (DWV).....Table P2905.6, Table P3002.3
B16.26—2006	Cast-copper-alloy Fittings for Flared Copper Tubes.....Table P2905.6, Table P3002.3
B16.28—1994	Wrought-steel Buttwelding Short Radius Elbows and Returns.....Table P2905.6
B16.29—2007	Wrought-copper and Wrought-copper-alloy Solder Joint Drainage Fittings (DWV).....Table P2905.6, Table P3002.3
B16.33—2002 (Reaffirmed 2007)	Manually Operated Metallic Gas Valves for Use in Gas Piping Systems up to 125 psig (Sizes $^1/_2$ through 2).....Table G2420.1.1
B16.44—2002 (Reaffirmed 2007)	Manually Operated Metallic Gas Valves for Use in Above-ground Piping Systems up to 5 psi.....Table G2420.1.1
B36.10M—2004	Welded and Seamless Wrought-steel Pipe.....G2414.4.2
BPVC—2007	ASME Boiler and Pressure Vessel Code (2007 Edition).....M2001.1.1, G2452.1
CSD-1—2009	Controls and Safety Devices for Automatically Fired Boilers.....M2001.1.1, G2452.1

ASSE

American Society of Sanitary Engineering
901 Canterbury, Suite A
Westlake, OH 44145

Standard reference number	Title	Referenced in code section number
1001—2008	Performance Requirements for Atmospheric-type Vacuum Breakers	Table P2902.3, P2902.3.2
1002—2008	Performance Requirements for Anti-siphon Fill Valves for Water Closet Flush Tank	Table P2701.1, Table P2902.3, P2902.4.1
1003—2009	Performance Requirements for Water-pressure-reducing Valves for Domestic Water Distribution Systems	P2903.3.1
1008—2006	Performance Requirements for Plumbing Aspects of Residential Food Waste Disposer Units	Table P2701.1
1010—2004	Performance Requirements for Water Hammer Arresters	P2903.5
1011—2004	Performance Requirements for Hose Connection Vacuum Breakers	Table P2902.3, P2902.3.2
1012—2009	Performance Requirements for Backflow Preventers with Intermediate Atmospheric Vent	Table P2902.3, P2902.3.3, P2902.5.1, P2902.5.5
1013—2009	Performance Requirements for Reduced Pressure Principle Backflow Preventers and Reduced Pressure Principle Fire Protection Backflow Preventers	Table P2902.3, P2902.3.5, P2902.5.1, P2902.5.5
1015—2009	Performance Requirements for Double Check Backflow Prevention Assemblies and Double Check Fire Protection Backflow Prevention Assemblies	Table P2902.3, P2902.3.6
1016—2010	Performance Requirements for Automatic Compensating Valves for Individual Showers and Tub/Shower Combinations	Table P2701.1, P2708.3, P2722.2
1017—2010	Performance Requirements for Temperature-actuated Mixing Valves for Hot Water Distribution Systems	P2724.1, P2802.2
1019—2010	Performance Requirements for Freeze-resistant, Wall Hydrants, Vacuum Breaker, Draining Types	Table P2701.1, P2902.3
1020—2004	Performance Requirements for Pressure Vacuum Breaker Assembly	Table P2902.3, P2902.3.4
1023—2010	Performance Requirements for Hot Water Dispensers, Household-storage-type—Electrical	Table P2701.1
1024—2004	Performance Requirements for Dual Check Backflow Preventers, Anti-siphon-type, Residential Applications	Table P2902.3
1035—2008	Performance Requirements for Laboratory Faucet Backflow Preventers	Table P2902.3, P2902.3.2
1037—2010	Performance Requirements for Pressurized Flushing Devices (Flushometer) for Plumbing Fixtures	Table P2701.1
1047—2009	Performance Requirements for Reduced Pressure Detector Fire Protection Backflow Prevention Assemblies	Table P2902.3, P2902.3.5
1048—2009	Performance Requirements for Double Check Detector Fire Protection Backflow Prevention Assemblies	Table P2902.3, P2902.3.6
1050—2009	Performance Requirements for Stack Air Admittance Valves for Sanitary Drainage Systems	P3114.1
1051—2009	Performance Requirements for Individual and Branch-type Air Admittance Valves for Plumbing Drainage Systems	P3114.1
1052—2004	Performance Requirements for Hose Connection Backflow Preventers	Table P2701.1, Table P2902.3, P2902.3.2
1056—2010	Performance Requirements for Spill-resistant Vacuum Breakers	Table P2902.3, P2902.3.4
1060—2006	Performance Requirements for Outdoor Enclosures for Fluid-conveying Components	P2902.6.1
1061—2010	Performance Requirements for Removable and Nonremovable Push Fit Fittings	Table P2905.6
1062—2006	Performance Requirements for Temperature-actuated, Flow Reduction (TAFR) Valves for Individual Supply Fittings	Table P2701.1, P2724.2
1066—2009	Performance Requirements for Individual Pressure Balancing In-line Valves for Individual Fixture Fittings	P2722.4
1070—2004	Performance Requirements for Water-temperature-limiting Devices	P2713.3, P2721.2

ASTM

ASTM International
100 Barr Harbor Drive
West Conshohocken, PA 19428

Standard reference number	Title	Referenced in code section number
A 36/A 36M—08	Specification for Carbon Structural Steel	R606.15, R611.5.2.2
A 53/A 53M—07	Specification for Pipe, Steel, Black and Hot-dipped, Zinc-coated Welded and Seamless	R402.3, Table M2101.1, G2414.4.2, Table P2905.4, Table P2905.5, Table P3002.1(1)

ASTM—continued

A 74—09	Specification for Cast-iron Soil Pipe and Fittings ..... Table P3002.1(1), Table P3002.1(2), Table P3002.2, Table P3002.3, P3005.2.9, Table P3302.1
A 82/A 82M—05a	Specification for Steel Wire, Plain, for Concrete Reinforcement R606.15
A 106/A 106M—08	Specification for Seamless Carbon Steel Pipe for High-temperature Service ..... Table M2101.1, G2414.4.2
A 153/A 153M—05	Specification for Zinc Coating (Hot Dip) on Iron and Steel Hardware ..... R317.3, Table R606.15.1
A 167—99 (2009)	Specification for Stainless and Heat-resisting Chromium-nickel Steel Plate, Sheet and Strip ..... R606.15, Table R606.15.1
A 240/A 240M—09a	Standard Specification for Chromium and Chromium-nickel Stainless Steel Plate, Sheet and Strip for Pressure Vessels and for General Applications ..... Table R905.10.3(1)
A 254—97 (2007)	Specification for Copper Brazed Steel Tubing ..... Table M2101.1 , G2414.5.1
A 307—07b	Specification for Carbon Steel Bolts and Studs, 60,000 psi Tensile Strength R611.5.2.2
A 312/A 312M—08a	Specification for Seamless, Welded and Heavily Cold Worked Austenitic Stainless Steel Pipes ..... Table P2905.4, Table P2905.5, Table P2905.6, P2905.12.2
A 463/A 463M—06	Standard Specification for Steel Sheet, Aluminum-coated by the Hot-dip Process ..... Table R905.10.3(2)
A 510—08	Specification for General Requirements for Wire Rods and Coarse Round Wire, Carbon Steel R606.15
A 539—99	Specification for Electric-resistance-welded Coiled Steel Tubing for Gas and Fuel Oil Lines M2202.1
A 615/A 615M—09	Specification for Deformed and Plain Billet-steel Bars for Concrete Reinforcement R402.3.1, R404.1.2.3.7.1, R611.5.2.1
A 641/A 641M—09a	Specification for Zinc-coated (Galvanized) Carbon Steel Wire ..... Table R606.15.1
A 653/A 653M—08	Specification for Steel Sheet, Zinc-coated (Galvanized) or Zinc-iron Alloy-coated Galvanized) by the Hot-dip Process ..... R317.3.1, R505.2.1, R505.2.3, R603.2.1, R603.2.3, Table R606.15.1, R611.5.2.3, R804.2.1, R804.2.3, Table R905.10.3(1), Table R905.10.3(2), M1601.1.1
A 706/A 706M—09	Specification for Low-alloy Steel Deformed and Plain Bars for Concrete Reinforcement R402.3.1, R404.1.2.3.7.1, R611.5.2.1
A 755/A 755M—03 (2008)	Specification for Steel Sheet, Metallic Coated by the Hot-dip Process and Prepainted by the Coil-coating Process for Exterior Exposed Building Products ..... Table R905.10.3(2)
A 778—01	Specification for Welded Unannealed Austenitic Stainless Steel Tubular Products ..... Table P2905.4, Table P2905.5, Table P2905.6
A 792/A 792M—08	Specification for Steel Sheet, 55% Aluminum-zinc Alloy-coated by the Hot-dip Process ..... R505.2.1, R505.2.3, R603.2.1, R603.2.3, R611.5.2. 3, R804.2.1, R804.2.3, Table 905.10.3(2)
A 875/A 875M—06	Specification for Steel Sheet, Zinc-5%, Aluminum Alloy-coated by the Hot-dip Process ..... R611.5.2.3, Table R905.10.3(2)
A 888—09	Specification for Hubless Cast Iron Soil Pipe and Fittings for Sanitary and Storm Drain, Waste and Vent Piping Application ..... Table P3002.1(1), Table P3002.1(2), Table P3002.2, Table P3002.3, P3005.2.9, Table P3302.1
A 924/A 924M—08a	Standard Specification for General Requirements for Steel Sheet, Metallic-coated by the Hot-Dip Process ..... Table R905.10.3(1)
A 951—06	Specification for Steel Wire Masonry Joint Reinforcement R606.15
A 996/A 996M—09	Specifications for Rail-steel and Axle-steel Deformed Bars for Concrete Reinforcement ... Table R404.1.2(9), R404.1.2.3.7.1, R611.5.2.1, Table R611.5.4(2)
A 1003/A 1003M—08	Standard Specification for Steel Sheet, Carbon, Metallic and Nonmetallic-coated for Cold-formed Framing Members R505.2.1, R505.2.3, R603.2.1, R603.2.3, R804.2.1, R804.2.3
B 32—08	Specification for Solder Metal P3003.10.3, P3003.11.3
B 42—02e01	Specification for Seamless Copper Pipe, Standard Sizes ..... Table M2101.1, Table P2905.4, Table P2905.5, Table P3002.1(1)
B 43—98 (2004)	Specification for Seamless Red Brass Pipe, Standard Sizes ..... Table M2101.1, G2413.5.2, Table P2905.4, Table P3002.1(1)
B 75—02	Specification for Seamless Copper Tube ..... Table M2101.1, Table P2905.4, Table P2905.5, Table P3002.1(1), Table P3002.1(2), Table P3002.2
B 88—03	Specification for Seamless Copper Water Tube ..... Table M2101.1, G2414.5.2, Table, P2905.4, Table P2905.5, Table P3002.1(1), Table P3002.1(2), Table P3002.2
B 101—07	Specification for Lead-coated Copper Sheet and Strip for Building Construction ..... Table R905.2.8.2, Table R905.10.3(1)
B 135—08a	Specification for Seamless Brass Tube ..... Table M2101.1
B 209—07	Specification for Aluminum and Aluminum-alloy Sheet and Plate ..... Table 905.10.3(1)
B 227—04	Specification for Hard-drawn Copper-clad Steel Wire R606.15

ASTM—continued

B 251—02e01	Specification for General Requirements for Wrought Seamless Copper and Copper-alloy Tube	Table M2101.1, Table P2905.4, Table P2905.5, Table P3002.1(1), Table P3002.2
B 302—07	Specification for Threadless Copper Pipe, Standard Sizes	Table M2101.1, Table P2905.4, Table P2905.5, Table P3002.1(1)
B 306—09	Specification for Copper Drainage Tube (DWV)	Table M2101.1, Table P3002.1(1), Table P3002.1(2), Table P3002.2
B 370—09	Specification for Copper Sheet and Strip for Building Construction	Table R905.2.8.2, Table R905.10.3(1), Table P2701.1
B 447—07	Specification for Welded Copper Tube	Table P2904.4, Table P2905.5
B 695—04	Standard Specification for Coatings of Zinc Mechanically Deposited on Iron and Steel	R317.3.1, R317.3.3
B 813—00 (2009)	Specification for Liquid and Paste Fluxes for Soldering Applications of Copper and Copper Alloy Tube	Table M2101.1, P2905.14, P3003.10.3, P3003.11.3
B 828—02	Practice for Making Capillary Joints by Soldering of Copper and Copper Alloy Tube and Fittings	P2905.14, P3003.10.3, P3003.11.3
C 4—04e01	Specification for Clay Drain Tile and Perforated Clay Drain Tile	Table P3302.1
C 5—03	Specification for Quicklime for Structural Purposes	R702.2.1
C 14—07	Specification for Non-reinforced Concrete Sewer, Storm Drain and Culvert Pipe	Table P3002.2
C 22/C 22M—00 (2005e01)	Specification for Gypsum	R702.2.1, R702.3.1
C 27—98 (2008)	Specification for Standard Classification of Fireclay and High-alumina Refractory Brick	R1001.5, R1001.8
C 28/C 28M—00 (2005)	Specification for Gypsum Plasters	R702.2.1
C 33/C 33M—08	Specification for Concrete Aggregates	R403.4.1
C 34—03	Specification for Structural Clay Load-bearing Wall Tile	Table R301.2(1)
C 35—01(2005)	Specification for Inorganic Aggregates for Use in Gypsum Plaster	R702.2.1
C 55—06e01	Specification for Concrete Building Brick	R202, Table R301.2(1)
C 59/C 59M—00 (2006)	Specification for Gypsum Casting and Molding Plaster	R702.2
C 61/C 61M—00 (2006)	Specification for Gypsum Keene's Cement	R702.2.1
C 62—08	Specification for Building Brick (Solid Masonry Units Made from Clay or Shale)	R202, Table R301.2(1)
C 73—05	Specification for Calcium Silicate Face Brick (Sand Lime Brick)	R202, Table R301.2(1)
C 76—08a	Specification for Reinforced Concrete Culvert, Storm Drain and Sewer Pipe	Table P3002.2
C 90—08	Specification for Load-bearing Concrete Masonry Units	Table R301.2(1)
C 91—05	Specification for Masonry Cement	R702.2.2
C 94/C 94M—09	Specification for Ready-mixed Concrete	R404.1.2.3.2, R611.5.1.1
C 129—06	Specification for Nonload-bearing Concrete Masonry Units	Table R301.2(1)
C 143/C 143M—08	Test Method for Slump or Hydraulic Cement Concrete	R404.1.2.3.4, R611.5.1.3, R611.6.1
C 145—85	Specification for Solid Load-bearing Concrete Masonry Units	R202, Table R301.2(1)
C 150—07	Specification for Portland Cement	R702.2.2
C 199—84 (2005)	Test Method for Pier Test for Refractory Mortar	R1001.5, R1001.8, R1003.12
C 203—05a	Standard Test Methods for Breaking Load and Flexural Properties of Block-type Thermal Insulation	Table R613.3.1
C 207—06	Specification for Hydrated Lime for Masonry Purposes	Table R607.1
C 208—08a	Specification for Cellulosic Fiber Insulating Board	Table R602.3(1), Table R906.2
C 216—07a	Specification for Facing Brick (Solid Masonry Units Made from Clay or Shale)	R202, Table R301.2(1)
C 270—08a	Specification for Mortar for Unit Masonry	R607.1, AE602
C 272—01(2007)	Standard Test Method for Water Absorption of Core Materials for Structural Sandwich Constructions	Table R613.3.1
C 273/C 273M—07a	Standard Test Method for Shear Properties of Sandwich Core Materials	Table R613.3.1

ASTM—continued

C 296—00 (2004)	Specification for Asbestos Cement Pressure Pipe	Table P2905.4
C 315—07	Specification for Clay Flue Liners and Chimney Pots	R1001.8, R1003.11.1, Table R1003.14(1), G2425.12
C 406—06e01	Specifications for Roofing Slate	R905.6.4
C 411—05	Test Method for Hot-surface Performance of High-temperature Thermal Insulation	M1601.3
C 425—04	Specification for Compression Joints for Vitrified Clay Pipe and Fittings	Table P3002.2, P3003.15, P3003.18
C 428—05 (2006)	Specification for Asbestos-cement Nonpressure Sewer Pipe	Table P3002.2
C 443—05a	Specification for Joints for Concrete Pipe and Manholes, Using Rubber Gaskets	P3003.7, P3003.18
C 475/C 475—02 (2007)	Specification for Joint Compound and Joint Tape for Finishing Gypsum Wallboard	R702.3.1
C 476—08	Specification for Grout for Masonry	R609.1.1
C 508—04	Specification for Asbestos-cement Underdrain Pipe	Table P3302.1
C 514—04	Specification for Nails for the Application of Gypsum Wallboard	R702.3.1
C 552—07	Standard Specification for Cellular Glass Thermal Insulation	Table R906.2
C 557—03e01	Specification for Adhesives for Fastening Gypsum Wallboard to Wood Framing	R702.3.1
C 564—08	Specification for Rubber Gaskets for Cast Iron Soil Pipe and Fittings	P3003.6.2, P3003.6.3, P3003.18
C 578—08b	Specification for Rigid, Cellular Polystyrene Thermal Insulation	R403.3, R613.3.1, R703.11.2.1, Table R906.2
C 587—04	Specification for Gypsum Veneer Plaster	R702.2.1
C 595—08a	Specification for Blended Hydraulic Cements	R702.2.2
C 631—09	Specification for Bonding Compounds for Interior Gypsum Plastering	R702.2.1
C 645—08a	Specification for Nonstructural Steel Framing Members	R702.3.3
C 652—09	Specification for Hollow Brick (Hollow Masonry Units Made from Clay or Shale)	R202, Table R301.2(1)
C 685/C 685M—07	Specification for Concrete Made by Volumetric Batching and Continuous Mixing	R404.1.2.3.2, R611.5.1.1
C 700—07a	Specification for Vitrified Clay Pipe, Extra Strength, Standard Strength and Perforated	Table P3002.2, Table P3002.3, Table P3302.1
C 728—05	Standard Specification for Perlite Thermal Insulation Board	Table R906.2
C 836—06	Specification for High Solids Content, Cold Liquid-applied Elastomeric Waterproofing Membrane for Use with Separate Wearing Course	R905.15.2
C 843—99 (2006)	Specification for Application of Gypsum Veneer Plaster	R702.2.1
C 844—04	Specification for Application of Gypsum Base to Receive Gypsum Veneer Plaster	R702.2.1
C 847—09	Specification for Metal Lath	R702.2.1, R702.2.2
C 887—05	Specification for Packaged, Dry, Combined Materials for Surface Bonding Mortar	R406.1
C 897—05	Specification for Aggregate for Job-mixed Portland Cement-based Plasters	R702.2.2
C 920—08	Standard Specification for Elastomeric Joint Sealants	R406.4.1
C 926—06	Specification for Application of Portland Cement-based Plaster	R702.2.2, R702.2.2.1, R703.6, R703.6.2.1, R703.6.4
C 933—07b	Specification for Welded Wire Lath	R702.2.1, R702.2.2
C 954—07	Specification for Steel Drill Screws for the Application of Gypsum Panel Products or Metal Plaster Bases to Steel Studs from 0.033 in (0.84 mm) or to 0.112 in. (2.84 mm) in Thickness	R505.2.4, R603.2.4, R702.3.6, R804.2.4
C 955—09	Specification for Load-bearing (Transverse and Axial) Steel Studs, Runners (Tracks), and Bracing or Bridging for Screw Application of Gypsum Panel Products and Metal Plaster Bases	R702.3.3
C 957—06	Specification for High-solids Content, Cold Liquid-applied Elastomeric Waterproofing Membrane for Use with Integral Wearing Surface	R905.15.2
C 1002—07	Specification for Steel Drill Screws for the Application of Gypsum Panel Products or Metal Plaster Bases	R702.3.1, R702.3.6
C 1029—08	Specification for Spray-applied Rigid Cellular Polyurethane Thermal Insulation	R905.14.2
C 1032—06	Specification for Woven Wire Plaster Base	R702.2.1, R702.2.2
C 1047—09	Specification for Accessories for Gypsum Wallboard and Gypsum Veneer Base	R702.2.1, R702.2.2, R702.3.1
C 1063—08	Specification for Installation of Lathing and Furring to Receive Interior and Exterior Portland Cement-based Plaster	R702.2.2, R703.6
C 1107/C 1107M—08	Standard Specification for Packaged Dry, Hydraulic-cement Grout (Nonshrink)	R402.3.1
C 1116/C 116M—08a	Standard Specification for Fiber-reinforced Concrete and Shotcrete	R402.3.1
C 1167—03	Specification for Clay Roof Tiles	R905.3.4
C 1173—08	Specification for Flexible Transition Couplings for Underground Piping Systems	P3003.3, P3003.7, P3003.8.1, P3003.14.1, P3003.15, P3003.17.2, P3003.18
C 1177/C 1177M—08	Specification for Glass Mat Gypsum Substrate for Use as Sheathing	R702.3.1

ASTM—continued

C 1178/C 1178M—08	Specification for Glass Mat Water-resistant Gypsum Backing Panel	R702.3.1, R702.3.8, R702.4.2
C 1186—08	Specification for Flat Nonasbestos Fiber Cement Sheets	R703.10.1, R703.10.2
C 1261—07	Specification for Firebox Brick for Residential Fireplaces	R1001.5, R1001.8
C 1277—08	Specification for Shielded Couplings Joining Hubless Cast Iron Soil Pipe and Fittings	P3003.6.3
C 1278/C 1278M—07a	Specification for Fiber-reinforced Gypsum Panels	R702.3.1, R702.3.8, R702.4.2
C 1283—07a	Practice for Installing Clay Flue Lining	R1003.9.1, R1003.12
C 1288—99 (2004)e1	Standard Specification for Discrete Nonasbestos Fiber-cement Interior Substrate Sheets	R702.4.2
C 1289—08	Standard Specification for Faced Rigid Cellular Polyisocyanurate Thermal Insulation Board	R703.11.2.1, Table R906.2
C 1325—08b	Standard Specification for Nonasbestos Fiber-mat Reinforced Cement Interior Substrate Sheets	R702.4.2
C 1328—05	Specification for Plastic (Stucco) Cement	R702.2.2
C 1396/C 1396M—06a	Specification for Gypsum Board	Table R602.3(1), R702.2.1, R702.2.2, R702.3.1, R702.3.8
C 1440—08	Specification for Thermoplastic Elastomeric (TPE) Gasket Materials for Drain, Waste and Vent (DWV), Sewer, Sanitary and Storm Plumbing Systems	P3003.18
C 1460—08	Specification for Shielded Transition Couplings for Use with Dissimilar DWV Pipe and Fittings Above Ground	P3003.18
C 1461—08	Specification for Mechanical Couplings Using Thermoplastic Elastomeric (TPE) Gaskets for Joining Drain, Waste and Vent (DWV) Sewer, Sanitary and Storm Plumbing Systems for Above and Below Ground Use	P3003.18
C 1492—03	Specification for Concrete Roof Tile	R905.3.5
C 1513—04	Standard Specification for Steel Tapping Screws for Cold-formed Steel Framing Connections	R505.2.4, R603.2.4, R702.3.6, R804.2.4
C 1658/C 1658M—06	Standard Specification for Glass Mat Gypsum Panels	R702.3.1
D 41—05	Specification for Asphalt Primer Used in Roofing, Dampproofing and Waterproofing	Table R905.9.2, Table R905.11.2
D 43—00(2006)	Specification for Coal Tar Primer Used in Roofing, Dampproofing and Waterproofing	Table R905.9.2
D 225—07	Specification for Asphalt Shingles (Organic Felt) Surfaced with Mineral Granules	R905.2.4
D 226—06	Specification for Asphalt-saturated (Organic Felt) Used in Roofing and Waterproofing	R703.2, R905.2.3, R905.3.3, R905.4.3, R905.4.3.2, R905.5.3, R905.5.3.2, R905.6.3, R905.6.3.2, R905.7.3, R905.8.3, R905.8.3.2, R905.8.4, Table R905.9.2, R905.10.5.1
D 227—03	Specification for Coal Tar Saturated (Organic Felt) Used in Roofing and Waterproofing	Table R905.9.2
D 312—00 (2006)	Specification for Asphalt Used in Roofing	Table R905.9.2
D 422—63 (2007)	Test Method for Particle-size Analysis of Soils	R403.1.8.1
D 449—03 (2008)	Specification for Asphalt Used in Dampproofing and Waterproofing	R406.2
D 450—07	Specification for Coal-tar Pitch Used in Roofing, Dampproofing and Waterproofing	Table R905.9.2
D 1227—95 (2007)	Specification for Emulsified Asphalt Used as a Protective Coating for Roofing	Table R905.9.2, Table R905.11.2, R905.15.2
D 1248—05	Specification for Polyethylene Plastics Extrusion Materials for Wire and Cable	M1601.1.2
D 1527—99 (2005)	Specification for Acrylonitrile-butadiene-styrene (ABS) Plastic Pipe, Schedules 40 and 80	Table P2905.4
D 1621—04a	Standard Test Method for Compressive Properties of Rigid Cellular Plastics	Table R613.3.1
D 1622—08	Standard Test Method for Apparent Density of Rigid Cellular Plastics	Table R613.3.1
D 1623—03	Standard Test Method for Tensile and Tensile Adhesion Properties of Rigid Cellular Plastics	Table R613.3.1
D 1693—08	Test Method for Environmental Stress-cracking of Ethylene Plastics	Table M2101.1
D 1784—08	Standard Specification for Rigid Poly (Vinyl Chloride) (PVC) Compounds and Chlorinated Poly (Vinyl Chloride) (CPVC) Compounds	M1601.1.2
D 1785—06	Specification for Poly (Vinyl Chloride) (PVC) Plastic Pipe, Schedules 40, 80 and 120	Table P2905.4
D 1863—05	Specification for Mineral Aggregate Used in Built-up Roofs	Table R905.9.2
D 1869—95 (2005)e1	Specification for Rubber Rings for Asbestos-cement Pipe	P2904.17, P3003.4, P3003.18
D 1970—09	Specification for Self-adhering Polymer Modified Bitumen Sheet Materials Used as Steep Roofing Underlayment for Ice Dam Protection	R905.2.3, R905.2.7.2, R905.2.8.2, R905.3.3.3, R905.4.3, R905.4.3.2, R905.5.3.2, R905.6.3.2, R905.7.3.2, R905.8.3.2, R905.10.5.1
D 2104—03	Specification for Polyethylene (PE) Plastic Pipe, Schedule 40	Table P2905.4
D 2126—04	Standard Test Method for Response of Rigid Cellular Plastics to Thermal and Humid Aging	Table R613.3.1
D 2178—04	Specification for Asphalt Glass Felt Used in Roofing and Waterproofing	Table R905.9.2
D 2235—04	Specification for Solvent Cement for Acrylonitrile-butadiene-styrene (ABS) Plastic Pipe and Fittings	P2905.9.1.1, P3003.3.2, P3003.8.2

ASTM—continued

D 2239—03	Specification for Polyethylene (PE) Plastic Pipe (SIDR-PR) Based on Controlled Inside Diameter ... Table P2905.4
D 2241—05	Specification for Poly (Vinyl Chloride) (PVC) Pressure-rated Pipe (SDR-Series) ... Table P2905.4
D 2282—05	Specification for Acrylonitrile-butadiene-styrene (ABS) Plastic Pipe (SDR-PR) ... Table P2905.4
D 2412—02 (2008)	Test Method for Determination of External Loading Characteristics of Plastic Pipe by Parallel-plate Loading ... M1601.1.2
D 2447—03	Specification for Polyethylene (PE) Plastic Pipe Schedules 40 and 80, Based on Outside Diameter ... Table M2101.1
D 2464—06	Specification for Threaded Poly (Vinyl Chloride) (PVC) Plastic Pipe Fittings, Schedule 80 ... Table P2905.6
D 2466—06	Specification for Poly (Vinyl Chloride) (PVC) Plastic Pipe Fittings, Schedule 40 ... Table P2905.6
D 2467—06	Specification for Poly (Vinyl Chloride) (PVC) Plastic Pipe Fittings, Schedule 80 ... Table P2905.6
D 2468—96a	Specification for Acrylonitrile-butadiene-styrene (ABS) Plastic Pipe Fittings, Schedule 40 ... Table P2905.6
D 2513—08b	Specification for Thermoplastic Gas Pressure Pipe, Tubing and Fittings ... Table M2101.1, M2104.2.1.3, G2414.6, G2414.6.1, G2414.11, G2415.15.2
D 2559—04	Standard Specification for Adhesives for Structural Laminated Wood Products for Use Under Exterior (West Use) Exposure Conditions ... R613.3.3
D 2564—04e01	Specification for Solvent Cements for Poly (Vinyl Chloride) (PVC) Plastic Piping Systems ... P2905.9.1.3, Table P3002.2, P3003.9.2, P3003.14.2
D 2609—02 (2008)	Specification for Plastic Insert Fittings for Polyethylene (PE) Plastic Pipe ... Table P2905.6
D 2626—04	Specification for Asphalt-saturated and Coated Organic Felt Base Sheet Used in Roofing ... R905.3.3, Table R905.9.2
D 2657—07	Standard Practice for Heat Fusion-joining of Polyolefin Pipe Fittings ... P2905.3.1, P3003.17.1
D 2661—08	Specification for Acrylonitrile-butadiene-styrene (ABS) Schedule 40 Plastic Drain, Waste, and Vent Pipe and Fittings ... Table P3002.1(1), Table P3002.1(2), Table P3002.2, Table P3002.3, P3003.3.2, P3003.8.2
D 2665—09	Specification for Poly (Vinyl Chloride) (PVC) Plastic Drain, Waste and Vent Pipe and Fittings ... Table P3002.1(1), Table P3002.1(2), Table P3002.2, Table P3002.3
D 2672—96a (2003)	Specification for Joints for IPS PVC Pipe Using Solvent Cement ... Table P2905.4
D 2683—04	Specification for Socket-type Polyethylene Fittings for Outside Diameter-controlled Polyethylene Pipe and Tubing ... Table M2101.1, M2104.2.1.1
D 2729—03	Specification for Poly (Vinyl Chloride) (PVC) Sewer Pipe and Fittings ... P3009.14.10, Table P3302.1, Table AO103.10
D 2737—03	Specification for Polyethylene (PE) Plastic Tubing ... Table P2905.4
D 2751—05	Specification for Acrylonitrile-butadiene-styrene (ABS) Sewer Pipe and Fittings ... Table P3002.2, Table P3002.3
D 2822—05	Specification for Asphalt Roof Cement, Asbestos Containing ... Table R905.9.2
D 2823—05	Specification for Asphalt Roof Coatings, Asbestos Containing ... Table R905.9.2
D 2824—06	Specification for Aluminum-pigmented Asphalt Roof Coatings, Nonfibered, Asbestos Fibered and Fibered without Asbestos ... Table R905.9.2, Table R905.11.2
D 2837—08	Test Method for Obtaining Hydrostatic Design Basis for Thermoplastic Pipe Materials or Pressure Design Basis for Thermoplastic Pipe Products ... Table M2101.1
D 2846/D 2846M—09	Specification for Chlorinated Poly (Vinyl Chloride) (CPVC) Plastic Hot- and Cold-water Distribution Systems ... Table M2101.1, P2904.9.1.2, Table P2905.4, Table P2905.5, Table P2905.6
D 2855—96 (2002)	Standard Practice for Making Solvent-cemented Joints with Poly (Vinyl Chloride) (PVC) Pipe and Fittings ... P3003.9.2, P3003.14.2
D 2898—04	Test Methods for Accelerated Weathering of Fire-retardant-treated Wood for Fire Testing ... R802.1.3.4, R802.1.3.6, *R327.4*
D 2949—01a (2008)	Specification for 3.25-in. Outside Diameter Poly (Vinyl Chloride) (PVC) Plastic Drain, Waste and Vent Pipe and Fittings ... Table P3002.1(1), Table P3002.1(2), Table P3002.2, Table P3002.3
D 3019—08	Specification for Lap Cement Used with Asphalt Roll Roofing, Nonfibered, Asbestos Fibered and Nonasbestos Fibered ... Table R905.9.2, Table R905.11.2
D 3034—08	Specification for Type PSM Poly (Vinyl Chloride) (PVC) Sewer Pipe and Fittings ... Table P3002.2, Table P3002.3
D 3035—08	Specification for Polyethylene (PE) Plastic Pipe (DR-PR) Based On Controlled Outside Diameter ... Table M2101.1

ASTM—continued

D 3161—09	Test Method for Wind Resistance of Asphalt Shingles (Fan Induced Method)	R905.2.4.1, Table R905.2.4.1(2), R905.16.3
D 3201—08a	Test Method for Hygroscopic Properties of Fire-retardant Wood and Wood-base Products	R802.1.3.7, *R327.4*
D 3212—07	Specification for Joints for Drain and Sewer Plastic Pipes Using Flexible Elastomeric Seals	P3003.3.1, P3003.8.1, P3003.9.1, P3003.14.1, P3003.17.2
D 3309—96a (2002)	Specification for Polybutylene (PB) Plastic Hot- and Cold-water Distribution System	Table M2101.1
D 3311—08	Specification for Drain, Waste and Vent (DWV) Plastic Fittings Patterns	P3002.3
D 3350—08	Specification for Polyethylene Plastic Pipe and Fitting Materials	Table M2101.1
D 3462—09	Specification for Asphalt Shingles Made From Glass Felt and Surfaced with Mineral Granules	R905.2.4
D 3468—99 (2006)e01	Specification for Liquid-applied Neoprene and Chlorosulfanated Polyethylene Used in Roofing and Waterproofing	R905.15.2
D 3679—09	Specification for Rigid Poly (Vinyl Chloride) (PVC) Siding	Table R703.4, R703.11
D 3737—08	Practice for Establishing Allowable Properties for Structural Glued Laminated Timber (Glulam)	R502.1.5, R602.1.2, R802.1.4
D 3747—79 (2007)	Specification for Emulsified Asphalt Adhesive for Adhering Roof Insulation	Table R905.9.2, Table R905.11.2
D 3909—97b (2004)e1	Specification for Asphalt Roll Roofing (Glass Felt) Surfaced with Mineral Granules	R905.2.8.2, R905.5.4, Table R905.9.2, *R327.6.1.2, R327.6.1.3*
D 3957—06	Standard Practices for Establishing Stress Grades for Structural Members Used in Log Buildings	R502.1.6, R602.1.3, R802.1.5
D 4022—07	Specification for Coal Tar Roof Cement, Asbestos Containing	Table R905.9.2
D 4068—01	Specification for Chlorinated Polyethylene (CPE) Sheeting for Concealed Water Containment Membrane	P2709.2, P2709.2.2
D 4318—05	Test Methods for Liquid Limit, Plastic Limit and Plasticity Index of Soils	R403.1.8.1
D 4434/D 4434M—09	Specification for Poly (Vinyl Chloride) Sheet Roofing	R905.13.2
D 4479—07	Specification for Asphalt Roof Coatings-asbestos-free	Table R905.9.2
D 4551—96 (2008)e1	Specification for Poly (Vinyl) Chloride (PVC) Plastic Flexible Concealed Water-containment Membrane	P2709.2, P2709.2.1
D 4586—07	Specification for Asphalt Roof Cement-asbestos-free	Table R905.9.2
D 4601—08	Specification for Asphalt-coated Glass Fiber Base Sheet Used in Roofing	Table R905.9.2
D 4637—08	Specification for EPDM Sheet Used in Single-ply Roof Membrane	R905.12.2
D 4829—08a	Test Method for Expansion Index of Soils	R403.1.8.1
D 4869—05e01	Specification for Asphalt-saturated (Organic Felt) Underlayment Used in Steep Slope Roofing	R905.2.3, R905.2.7.2, R905.4.3, R905.4.3.2, R905.5.3, R905.5.3.2, R905.6.3, R905.6.3.2, R905.7.3, R905.7.3.2, R905.8.3, R905.8.3.2
D 4897—01	Specification for Asphalt Coated Glass-fiber Venting Base Sheet Used in Roofing	Table R905.9.2
D 4990—97a (2005)e01	Specification for Coal Tar Glass Felt Used in Roofing and Waterproofing	Table R905.9.2
D 5019—07a	Specification for Reinforced Nonvulcanized Polymeric Sheet Used in Roofing Membrane	R905.12.2
D 5055—09	Specification for Establishing and Monitoring Structural Capacities of Prefabricated Wood I-joists	R502.1.4
D 5456—09	Standard Specification for Evaluation of Structural Composite Lumber Products	R502.1.8, R602.14, R802.1.6
D 5516—03	Test Method for Evaluating the Flexural Properties of Fire-retardant-treated Softwood Plywood Exposed to the Elevated Temperatures	R802.1.3.5.1
D 5643—06	Specification for Coal Tar Roof Cement Asbestos-free	Table R905.9.2
D 5664—08	Test Methods For Evaluating the Effects of Fire-retardant Treatments and Elevated Temperatures on Strength Properties of Fire-retardant-treated Lumber	R802.1.3.5.2
D 5665—99a (2006)	Specification for Thermoplastic Fabrics Used in Cold-applied Roofing and Waterproofing	Table R905.9.2
D 5726—98 (2005)	Specification for Thermoplastic Fabrics Used in Hot-applied Roofing and Waterproofing	Table R905.9.2
D 6083—05e01	Specification for Liquid-applied Acrylic Coating Used in Roofing	Table R905.9.2, Table R905.11.2, Table R905.14.3, R905.15.2
D 6162—00a (2008)	Specification for Styrene Butadiene Styrene (SBS) Modified Bituminous Sheet Materials Using a Combination of Polyester and Glass Fiber Reinforcements	Table R905.11.2
D 6163—00 (2008)	Specification for Styrene Butadiene Styrene (SBS) Modified Bituminous Sheet Materials Using Glass Fiber Reinforcements	Table R905.11.2
D 6164—05e1	Specification for Styrene Butadiene Styrene (SBS) Modified Bituminous Sheet Materials Using Polyester Reinforcements	Table R905.11.2
D 6222—08	Specification for Atactic Polypropylene (APP) Modified Bituminous Sheet Materials Using Polyester Reinforcements	Table R905.11.2

ASTM—continued

D 6223—02	Specification for Atactic Polypropylene (APP) Modified Bituminous Sheet Materials Using a Combination of Polyester and Glass Fiber Reinforcement ..... Table R905.11.2
D 6298—05e1	Specification for Fiberglass-reinforced Styrene Butadiene Styrene (SBS) Modified Bituminous Sheets with a Factory Applied Metal Surface ..... Table R905.11.2
D 6305—08	Practice for Calculating Bending Strength Design Adjustment Factors for Fire-retardant-treated Plywood Roof Sheathing R802.1.3.5.1
D 6380—03 (2009)	Standard Specification for Asphalt Roll Roofing (Organic Felt)..... R905.2.8.2, R905.3.3, R905.5.4
D 6694—08	Standard Specification for Liquid-applied Silicone Coating Used in Spray Polyurethane Foam Roofing Systems ..... Table R905.14.3, R905.15.2
D 6754—02	Standard Specification for Ketone-ethylene-ester-based Sheet Roofing..... R905.13.2
D 6757—07	Standard Specification for Inorganic Underlayment for Use with Steep Slope Roofing Products ..... R905.2.3 , R905.2.7.2
D 6841—08	Standard Practice for Calculating Design Value Treatment Adjustment Factors for Fire-retardant-treated Lumber..... R802.1.3.5.2
D 6878—08e1	Standard Specification for Thermoplastic-polyolefin-based Sheet Roofing..... R905.13.2
D 6947—07	Standard Specification for Liquid Applied Moisture Cured Polyurethane Coating Used in Spray Polyurethane Foam Roofing System ..... Table R905.14.3, R905.15.2
D 7032—08	Standard Specification for Establishing Performance Ratings for Wood-plastic Composite Deck Boards and Guardrail Systems (Guards or Handrails)..... R317.4, R317.4.1, R507.3
D 7158—08d	Standard Test Method for Wind Resistance of Sealed Asphalt Shingles (Uplift Force/Uplift Resistance Method)..... R905.2.4.1, Table R905.2.4.1(1)
E 84—09	Test Method for Surface Burning Characteristics of Building Materials R202, R302.9.3, R302.9.4, R302.10.1, R302.10.2, R316.3, R316.4, R316.5.9, R316.5.11, *R327.9.3.4,* R802.1.3, M1601.3, M1601.5.2
E 90—04	Test Method for Laboratory Measurement of Airborne Sound Transmission Loss of Building Partitions and Elements AK102, AK102.1.1
E 96/E 96M—05	Test Method for Water Vapor Transmission of Materials....., R202, Table R613.3.1, M1411.5, M1601.4.5
E 108—07a	Test Methods for Fire Tests of Roof Coverings..... R902.1
E 119—08a	Test Methods for Fire Tests of Building Construction and Materials R302.2, R302.3, R302.4.1, R316.4
E 136—09	Test Method for Behavior of Materials in a Vertical Tube Furnace at 750°C..... R202, Table R302.1(1), Table R302.1(2), R302.11
E 283—04	Test Method for Determining the Rate of Air Leakage Through Exterior Windows, Curtain Walls and Doors Under Specified Pressure Differences Across the Specimen N1102.4.4
E 330—02	Test Method for Structural Performance of Exterior Windows, Curtain Walls and Doors by Uniform Static Air Pressure Difference..... R612.4, R612.5, R703.1.2
E 331—00 (2009)	Test Method for Water Penetration of Exterior Windows, Skylights, Doors and Curtain Walls by Uniform Static Air Pressure Difference R703.1.1
E 492—09	Specification for Laboratory Measurement of Impact Sound Transmission through Floor-ceiling Assemblies Using the Tapping Machine AK103
E 814—08b	Test Method for Fire Tests of Through-penetration Firestops..... R302.4.1.2
E 970—08a	Test Method for Critical Radiant Flux of Exposed Attic Floor Insulation Using a Radiant Heat Energy Source..... R302.10.5
E 1509—04	Standard Specification for Room Heaters, Pellet Fuel-burning Type M1410.1
E 1602—03	Guide for Construction of Solid Fuel Burning Masonry Heaters R1002.2
E 1886—05	Test Method for Performance of Exterior Windows, Curtain Walls, Doors and Storm Shutters Impacted by Missles and Exposed to Cyclic Pressure Differentials R301.2.1.2, R612.6.1
E 1996—09	Standard Specification for Performance of Exterior Windows, Curtain Walls, Doors and Impact Protective Systems Impacted by Windborne Debris in Hurricanes R301.2.1.2, R612.6.1
E 2178—03	Standard Test Method for Air Permeance of Building Materials R202
E 2231—04	Standard Practice for Specimen Preparation and Mounting of Pipe and Duct Insulation Materials to Assess Surface Burning Characteristics..... M1601.3
E 2273—03	Standard Test Method for Determining the Drainage Efficiency of Exterior Insulation and Finish Systems (EIFS) Clad Wall Assemblies..... R703.9.2
E 2568—09e1	Standard Specification for PB Exterior Insulation and Finish Systems (EIFS)..... R703.9.1, R703.9.2
E 2570—07	Standard Test Methods for Evaluating Water-resistive Barrier (WRB) Coatings Used Under Exterior Insulation and Finish Systems (EIFS) or EIFS with Drainage R703.9.2.1
E 2634—08	Standard Specification for Flat Wall Insulating Concrete Form (ICF) Systems..... R404.1.2.3.6.1, R611.4.4
F 405—05	Specification for Corrugated Polyethylene (PE) Pipe and Fittings ..... Table P3009.14.10, Table P3302.1, Table AO103.10

ASTM—continued

F 409—02(2008)	Specification for Thermoplastic Accessible and Replaceable Plastic Tube and Tubular Fittings. . . . . Table P2701.1, P2702.2, P2702.3
F 437—06	Specification for Threaded Chlorinated Poly (Vinyl Chloride) (CPVC) Plastic Pipe Fittings, Schedule 80. . . . . Table P2905.6
F 438—04	Specification for Socket-type Chlorinated Poly (Vinyl Chloride) (CPVC) Plastic Pipe Fittings, Schedule 40. . . . . Table P2905.6
F 439—06	Specification for Socket-type Chlorinated Poly (Vinyl Chloride) (CPVC) Plastic Pipe Fittings, Schedule 80. . . . . Table P2905.6
F 441/F 441M—02 (2008)	Specification for Chlorinated Poly (Vinyl Chloride) (CPVC) Plastic Pipe, Schedules 40 and 80. . . . . Table P2905.4, Table P2905.5
F 442/F 442M—99 (2005)e1	Specification for Chlorinated Poly (Vinyl Chloride) (CPVC) Plastic Pipe (SDR-PR) . . . . . Table P2905.4, Table P2905.5
F 477—08	Specification for Elastomeric Seals (Gaskets) for Joining Plastic Pipe P2905.17, P3003.18
F 493—04	Specification for Solvent Cements for Chlorinated Poly (Vinyl Chloride) (CPVC) Plastic Pipe and Fittings P2905.9.1.2
F 628—08	Specification for Acrylonitrile-butadiene-styrene (ABS) Schedule 40 Plastic Drain, Waste and Vent Pipe with a Cellular Core . . . . . Table P3002.1(1), Table P3002.1(2), Table P3002.2, Table P3002.3, P3003.3.2, P3003.8.2
F 656—08	Specification for Primers for Use in Solvent Cement Joints of Poly (Vinyl Chloride) (PVC) Plastic Pipe and Fittings P2905.9.1.3, P3003.9.2, P3003.14.2
F 714—08	Specification for Polyethylene (PE) Plastic Pipe (SDR-PR) Based on Outside Diameter. . . . . Table P3002.2
F 876—08b	Specification for Cross-linked Polyethylene (PEX) Tubing. . . . . Table M2101.1, Table P2905.4, Table P2905.5
F 877—07	Specification for Cross-linked Polyethylene (PEX) Plastic Hot- and Cold-water Distribution Systems . . . . . Table M2101.1, Table P2905.4, Table P2905.5, Table P2905.6
F 891—07	Specification for Coextruded Poly (Vinyl Chloride) (PVC) Plastic Pipe with a Cellular Core. . . . . P2905.6, Table P3002.1(1), Table P3002.1(2), Table P3002.2, Table P3302.1
F 1055—98 (2006)	Specification for Electrofusion Type Polyethylene Fittings for Outside Diameter Controlled Polyethylene Pipe and Tubing . . . . . Table M2101.1, M2104.2.1.2
F 1281—07	Specification for Cross-linked Polyethylene/Aluminum/Cross-linked Polyethylene (PEX-AL-PEX) Pressure Pipe . . . . . Table M2101.1, Table P2905.4, Table P2905.5, Table P2905.6, P2505.11.1
F 1282—06	Specification for Polyethylene/Aluminum/Polyethylene (PE-AL-PE) Composite Pressure Pipe. . . . . Table M2101.1, Table P2905.4, Table P2905.5, Table P2905.6, P2905.11.1
F 1346—91 (2003)	Performance Specification for Safety Covers and Labeling Requirements for All Covers for Swimming Pools, Spas and Hot Tubs. AG105.2, AG105.5
F 1412—09	Specification for Polyolefin Pipe and Fittings for Corrosive Waste Drainage. . . . . Table P3002.1(2), Table P3002.2, Table P3002.3, P3003.16.1
F 1488—03	Specification for Coextruded Composite Pipe . . . . . Table P3002.1(1), Table P3002.1(2), Table P3002.2, Table P3009.14.10, Table AO103.10
F 1554—07a	Specification for Anchor Bolts, Steel, 36, 55 and 105-ksi Yield Strength R611.5.2.2
F 1667—05	Specification for Driven Fasteners, Nails, Spikes and Staples . . . . . Table R703.4, R905.2.5
F 1807—08	Specification for Metal Insert Fittings Utilizing a Copper Crimp Ring for SDR9 Cross-linked Polyethylene (PEX) Tubing . . . . . Table M2101.1, Table P2905.6
F 1866—07	Specification for Poly (Vinyl Chloride) (PVC) Plastic Schedule 40 Drainage and DWV Fabricated Fittings . . . . . Table P3002.3
F 1960—09	Specification for Cold Expansion Fittings with PEX Reinforcing Rings for Use with Cross-linked Polyethylene (PEX) Tubing. . . . . Table M2101.1, Table P2905.6
F 1973—08	Standard Specification for Factory Assembled Anodeless Risers and Transition Fittings in Polyethylene (PE) and Polyamide 11 (PA 11) Fuel Gas Distribution Systems G2415.15.2
F 1974—08	Specification for Metal Insert Fittings for Polyethylene/Aluminum/Polyethylene and Cross-linked Polyethylene/Aluminum/Cross-linked Polyethylene Composite Pressure Pipe. . . . . P2505.11.1, Table P2905.6
F 1986—01 (2006)	Multilayer Pipe Type 2, Compression Joints for Hot and Cold Drinking Water Systems . . . . . Table P2905.4, Table P2905.5, Table P2905.6
F 2080—08	Specification for Cold-expansion Fittings with Metal Compression-sleeves for Cross-linked Polyethylene (PEX) Pipe P2905.6

ASTM—continued

F 2090—08	Specification for Window Fall Prevention Devices—with Emergency Escape (Egress) Release Mechanisms	R612.2, R612.3
F 2098—08	Standard Specification for Stainless Steel Clamps for SDR9 PEX Tubing to Metal Insert Fittings	Table M2101.1, Table P2905.6
F 2159—08	Standard Specification for Plastic Insert Fittings Utilizing a Copper Crimp Ring for SDR9 Cross-linked Polyethylene (PEX) Tubing	P2905.6
F 2200—05	Standard Specification for Automated Vehicular Gate Construction	AR103.1
F 2262—05	Standard Specification for Cross-linked Polyethylene/Aluminum/Cross-linked Polyethylene Tubing OD Controlled SDR9	Table P2905.4, Table P2905.5
F 2389—07e1	Standard for Pressure-rated Polypropylene (PP) Piping Systems	Table M2101.1, Table P2905.4, Table P2905.5, Table P2905.6, P2905.10.1
F 2434—08	Standard Specification for Metal Insert Fittings Utilizing a Copper Crimp Ring for Polyethylene/Aluminum/Cross-linked Polyethylene (PEX-AL-PEX) Tubing	Table P2905.6
F 2623—08	Standard Specification for Polyethylene of Raised Temperature (PE-RT) SDRG Tubing	Table M2101.1
F 2735—09	Standard Specification for SDR9 Cross-linked Polyethylene (PEX) and Raised Temperature (PE-RT) Tubing	Table 605.3, Table 605.4, Table M2101.1
F 2769—09	Polyethylene or Raised Temperature (PE-RT) Plastic Hot and Cold-Water Tubing and Distribution Systems	Table M2101.1, Table P2905.4

AWPA

American Wood Protection Association
P.O. Box 361784
Birmingham, AL 35236-1784

Standard reference number	Title	Referenced in code section number
C1—03	All Timber Products—Preservative Treatment by Pressure Processes	R902.2
M4—08	Standard for the Care of Preservative-treated Wood Products	R317.1.1, R318.1.2
U1—11	USE CATEGORY SYSTEM: User Specification for Treated Wood Except Section 6 Commodity Specification H.	R317.1, R322.1.8, R402.1.2, R504.3, Table R905.8.5

AWS

American Welding Society
550 N. W. LeJeune Road
Miami, FL 33126

Standard reference number	Title	Referenced in code section number
A5.8—04	Specifications for Filler Metals for Brazing and Braze Welding	P3003.5.1, P3003.10.1, P3003.11.1

AWWA

American Water Works Association
6666 West Quincy Avenue
Denver, CO 80235

Standard reference number	Title	Referenced in code section number
C104—98	Standard for Cement-mortar Lining for Ductile-iron Pipe and Fittings for Water	P2905.4
C110/A21.10—03	Standard for Ductile-iron and Gray-iron Fittings, 3 Inches through 48 Inches, for Water	Table P2905.6, Table P3002.3
C115/A21.15—99	Standard for Flanged Ductile-iron Pipe with Ductile-iron or Gray-iron Threaded Flanges	Table P2905.4
C151/A21.51—02	Standard for Ductile-iron Pipe, Centrifugally Cast, for Water	Table P2905.4
C153/A21.53—00	Standard for Ductile-iron Compact Fittings for Water Service	Table P2905.6
C510—00	Double Check Valve Backflow Prevention Assembly	Table P2902.3, P2902.3.6
C511—00	Reduced-pressure Principle Backflow Prevention Assembly	Table P2902.3, P2902.3.5, P2902.5.1

AWWA—continued

C901—08	Polyethylene (PE) Pressure Pipe and Tubing $^1/_2$ in. (13 mm) through 3 in. (76 mm) for Water Service	P2905.4
C904—06	Cross-Linked Polyethylene (PEX) Pressure Pipe, $^1/_2$ in. (12 mm) through 3 in. (76 mm) for Water Service	P2905.4

CGSB

Canadian General Standards Board
Place du Portage 111, 6B1
11 Laurier Street
Gatineau, Quebec, Canada KIA 1G6

Standard reference number	Title	Referenced in code section number
CAN/CGSB-37.54—95	Polyvinyl Chloride Roofing and Waterproofing Membrane	R905.13.2
37-GP-52M—(1984)	Roofing and Waterproofing Membrane, Sheet Applied, Elastomeric	R905.12.2
37-GP-56M—(1980)	Membrane, Modified Bituminous, Prefabricated and Reinforced for Roofing—with December 1985 Amendment	Table R905.11.2

CISPI

Cast Iron Soil Pipe Institute
5959 Shallowford Road, Suite 419
Chattanooga, TN 37421

Standard reference number	Title	Referenced in code section number
301—04a	Standard Specification for Hubless Cast Iron Soil Pipe and Fittings for Sanitary and Storm Drain, Waste and Vent Piping Applications	Table P3002.1(1), Table P3002.1(2), Table P3002.2, Table P3002.3, P3005.2.9, Table P3302.1
310—04	Standard Specification for Coupling for Use in Connection with Hubless Cast Iron Soil Pipe and Fittings for Sanitary and Storm Drain, Waste and Vent Piping Applications	P3003.6.3

CPA

Composite Panel Association
19465 Deerfield Avenue, Suite 306
Leesburg, VA 20176

Standard reference number	Title	Referenced in code section number
ANSI A135.4—04	Basic Hardboard	Table R602.3(2)
ANSI A135.5—04	Prefinished Hardboard Paneling	R702.5
ANSI A135.6—06	Hardboard Siding	Table R703.4

CPSC

Consumer Product Safety Commission
4330 East West Highway
Bethesda, MD 20814-4408

Standard reference number	Title	Referenced in code section number
16 CFR, Part 1201—(2002)	Safety Standard for Architectural Glazing	R308.1.1, R308.3.1, Table R308.3.1(1)
16 CFR, Part 1209—(2002)	Interim Safety Standard for Cellulose Insulation	R302.10.3
16 CFR, Part 1404—(2002)	Cellulose Insulation.	R302.10.3

CSA

Canadian Standards Association
5060 Spectrum Way
Mississauga, Ontario, Canada L4N 5N6

Standard reference number	Title	Referenced in code section number
AAMA/WDMA/CSA 101/I.S.2/A440—11	North American Fenestration Standard/Specification for Windows, Doors and Unit Skylights	N1102.4.3
ANSI/CSA America FCI—03	Stationary Fuel Cell Power Systems	M1903.1
ASME A112.18.1/ CSA B125.1—2005	Plumbing Supply Fittings	P2708.4, P2722.1, P2722.2, P2722.3
ASME A112.18.2/ CSA B125.2—05	Plumbing Waste Fittings	Table P2701.1, P2702.2
ASME A112.9.2/ CSA B45.1—08	Ceramic Plumbing Fixtures	Table P2701.1, P2711.1, P2712.1
ASME A112.19.1/ CSA B45.2—02	Enameled Cast-Iron and Enameled Steel Plumbing Fixtures	Table 2701.1, P2711.1
ASME A112.19.3/ CSA Requirement 3—88	Manually Operated Gas Valves for Use in House Piping Systems	Table G2420.1.1
CSA 8—93	Requirements for Gas Fired Log Lighters for Wood Burning Fireplaces—with revisions through January 1999	G2433.1
O325—07	Construction Sheathing	R503.2.1, R602.3, R604.1, R903.2.1
O437-Series—93	Standards on OSB and Waferboard (Reaffirmed 2006)	R503.2.1, R602.3, R604.1, R803.2.1
CAN/CSA A257.1M—92	Circular Concrete Culvert, Storm Drain, Sewer Pipe and Fittings	Table P3002.2
CAN/CSA A257.2M—92	Reinforced Circular Concrete Culvert, Storm Drain, Sewer Pipe and Fittings	Table P3002.2
CAN/CSA A257.3M—92	Joints for Circular Concrete Sewer and Culvert Pipe, Manhole Sections and Fittings Using Rubber Gaskets	P3003.7, P3003.18
CAN/CSA B64.1.1—01	Vacuum Breakers, Atmospheric Type (AVB)	Table P2902.2, P2902.3.2
CAN/CSA B64.2—01	Vacuum Breakers, Hose Connection Type (HCVP)	Table P2902.2, P2902.3.2
CAN/CSA B64.2.2—01	Vacuum Breakers, Hose Connection Type (HCVP) with Automatic Draining Feature	Table P2902.2, P2902.3.2
CAN/CSA B64.3—01	Backflow Preventers, Dual Check Valve Type with Atmospheric Port (DCAP)	Table P2902.2, P2902.3.3
CAN/CSA B64.4—01	Backflow Preventers, Reduced Pressure Principle Type (RP)	Table P2902.3,
101/I.S.2/A440—08	Specifications for Windows, Doors and Unit Skylights	R308.6.9, R612.6
B45.4—02	Stainless Steel Plumbing Fixtures	Table P2701.1, P2711.1, P2712.1
B45.5—02 (R2008)	Plastic Plumbing Fixtures	Table P2701.1, P2711.2, P2712.1
B45.9—99 (R2008)	Macerating Systems and Related Components	P3007.1, P3007.2.1, P3007.5
B64.1.2—07	Pressure Vacuum Breakers (PVB)	Table P2902.2, P2902.3.4
B64.1.3—07	Spill Resistant Pressure Vacuum Breakers (SRPVB)	P2902.3
B64.2.1—07	Hose Connection Vacuum Breakers (HCVB) with Manual Draining Feature	Table P2902.2, P2902.3.2
B64.2.1.1—07	Hose Connection Dual Check Vacuum Breakers (HCDVB)	Table P2902.2, P2902.3.2
B64.3—07	Dual Check Backflow Preventers with Atmospheric Port (DCAP)	Table P2902.2
B64.4.1—07	Reduced Pressure Principle for Fire Sprinklers (RPF)	Table P2902.2
B64.5—07	Double Check Backflow Preventers (DCVA)	Table P2902.2, P2902.3.6
B64.5.1—07	Double Check Valve Backflow Preventers, Type for Fire Systems (DCVAF)	Table P2902.2, P2902.3.6
B64.6—07	Dual Check Valve Backflow Preventers (DuC	Table P2902.3
B64.7—07	Laboratory Faucet Vacuum Breakers (LFVB)	Table P2902.2, P2902.3.2
B125.1—01	Plumbing Fittings	Table P2701.1, P2708.3, P2722.2, P2722.3
B125.3—05	Plumbing Fittings	Table 2701.1, P2713.3, P2721.2
B137.1—05	Polyethylene (PE) Pipe, Tubing and Fittings for Cold Water Pressure Services	Table P2905.4, Table P2905.6
B137.2—05	Polyvinylchloride PVC Injection-moulded Gasketed Fittings for Pressure Applications	Table P2905.6
B137.3—05	Rigid Poly (Vinyl Chloride) (PVC) Pipe for Pressure Applications	Table P2905.4, P3003.9.2, P3003.14.2
B137.5—05	Cross-linked Polyethylene (PEX) Tubing Systems for Pressure Applications	Table P2905.4, Table P2905.5, Table P2905.6
B137.6—05	Chlorinated polyvinylchloride CPVC Pipe, Tubing and Fittings For Hot- and Cold-water Distribution Systems	Table P2905.4, Table P2905.5, Table 2905.6
B137.9—05	Polyethylene/Aluminum/Polyethylene (PE-AL-PE) Composite Pressure Pipe Systems	P2505.11.1, Table P2905.4

CSA—continued

B137.10M—05	Cross-linked Polyethylene/Aluminum/Polyethylene (PE-AL-PE) Composite Pressure Pipe Systems	Table M2101.1, P2505.11.1, Table P2905.4, Table P2905.5
B137.11—05	Polypropylene (PP-R) Pipe and Fittings for Pressure Applications	Table P2905.4.1, Table 2905.4, Table P2905.6
B181.1—06	Acrylonitrile-butadiene-styrene (ABS) Drain, Waste and Vent Pipe and Pipe Fittings	Table P3002.1(1), Table P3002.1(2), Table P3002.2, Table P3002.3, P3003.3.2, P3003.8.2
B181.2—06	Polyvinylchloride (PVC) and chlorinated polyvinylchloride (CPVC) Drain, Waste and Vent Pipe and Pipe Fittings	Table P3002.1(1), Table P3002.1(2), Table P3002.2, Table P3002.3, P3003.9.2, P3003.14.2, P3008.2, Table P3302.1
B181.3—06	Polyolefin and polyvinylidene (PVDF) Laboratory Drainage Systems	Table P3002.1(1), Table P3002.1(2), Table P3002.2, Table P3002.3, P3003.16.1
B182.2—06	PSM Type polyvinylchloride (PVC) Sewer Pipe and Fittings	Table P3002.1(1), Table P3002.1(2), Table P3002.2, Table P3002.3, Table P3302.1
B182.4—06	Profile polyvinylchloride (PVC) Sewer Pipe & Fittings	Table P3002.2, Table P3002.3, Table P3302.1
B182.6—06	Profile Polyethylene Sewer Pipe and Fittings	Table P3302.1
B182.8—06	Profile Polyethylene (PE) Storm Sewer and Drainage Pipe and Fittings	Table P3302.1
B356—00	Water Pressure Reducing Valves for Domestic Water Supply Systems	P2903.3.1
B483.1—07	Drinking Water Treatment Systems	P2908.1, P2908.2
B602—05	Mechanical Couplings for Drain, Waste and Vent Pipe and Sewer Pipe	P3003.3.1, P3003.6.3, P3003.7, P3003.8.1, P3003.14.1, P3003.15, P3003.17.2
LC3—00	Appliance Stands and Drain Pans	P2801.5, P2902.3.5, P2902.5.1

CSSB

Cedar Shake & Shingle Bureau
P. O. Box 1178
Sumas, WA 98295-1178

Standard reference number	Title	Referenced in code section number
CSSB—97	Grading and Packing Rules for Western Red Cedar Shakes and Western Red Shingles of the Cedar Shake and Shingle Bureau	R702.6, R703.5, Table R905.7.4, Table R905.8.5

DASMA

Door and Access Systems Manufacturers Association International
1300 Summer Avenue
Cleveland, OH 44115-2851

Standard reference number	Title	Referenced in code section number
108—05	Standard Method for Testing Garage Doors: Determination of Structural Performance Under Uniform Static Air Pressure Difference	R612 .4
115—05	Standard Method for Testing Garage Doors: Determination of Structural Performance Under Missile Impact and Cyclic Wind Pressure	R301.2.1.2

DOC

United States Department of Commerce
1401 Constitution Avenue, NW
Washington, DC 20230

Standard reference number	Title	Referenced in code section number
PS 1—09	Structural Plywood	R404.2.1, Table R404.2.3, R503.2.1, R602.3, R604.1, R613.3.2, R803.2.1

DOC—continued

PS 2—10	Performance Standard for Wood-based Structural-use Panels	R404.2.1, Table R404.2.3, R503.2.1, R602.3, R604.1, R613.3.2, Table 613.3.2, R803.2.1
PS 20—05	American Softwood Lumber Standard	R404.2.1, R502.1, R602.1, R802.1

DOTn

Department of Transportation
1200 New Jersey Avenue SE
East Building, 2nd floor
Washington, DC 20590

Standard reference number	Title	Referenced in code section number
49 CFR, Parts 192.281(e) & 192.283 (b) (2009)	Transportation of Natural and Other Gas by Pipeline: Minimum Federal Safety Standards	G2414.6.1

FEMA

Federal Emergency Management Agency
500 C Street, SW
Washington, DC 20472

Standard reference number	Title	Referenced in code section number
FA/TB-2—08	Flood-damage Resistant Materials Requirements	R322.1.8
FEMA-TB-11—01	Crawlspace Construction for Buildings Located in Special Flood Hazard Area	R408.7

FM

Factory Mutual Global Research
Standards Laboratories Department
1301 Atwood Avenue, P. O. Box 7500
Johnson, RI 02919

Standard reference number	Title	Referenced in code section number
4450—(1989)	Approval Standard for Class 1 Insulated Steel Deck Roofs—with Supplements through July 1992	R906.1
4880—(2005)	American National Standard for Evaluating Insulated Wall or Wall and Roof/Ceiling Assemblies, Plastic Interior Finish Materials, Plastic Exterior Building Panels, Wall/Ceiling Coating Systems, Interior or Exterior Finish Systems	R316.4, R316.6

GA

Gypsum Association
810 First Street, Northeast, Suite 510
Washington, DC 20002-4268

Standard reference number	Title	Referenced in code section number
GA-253—07	Application of Gypsum Sheathing	Table R602.3(1)

HPVA

Hardwood Plywood & Veneer Association
1825 Michael Faraday Drive
Reston, Virginia 20190-5350

Standard reference number	Title	Referenced in code section number
ANSI/HP-1—2009	Standard for Hardwood and Decorative Plywood	R702.5

HVI

Home Ventilating Institute
1000 N. Rand Road, Ste 214
Wauconda, IL 60084

Standard reference number	Title	Referenced in code section number
HVI 916—09	Airflow Test Procedure	Table M1507.3

ICC

International Code Council, Inc.
500 New Jersey Avenue, NW
6th Floor
Washington, DC 20001

Standard reference number	Title	Referenced in code section number
IBC—12	*International Building Code®*	*R101.2, R110.2, N1102.2.10, G2402.3*
ICC/ANSI A117.1—09	*Accessible and Usable Buildings and Facilities*	*R321.3*
ICC 400—12	*Standard on the Design and Construction of Log Structures*	*R301.1.1*
ICC 500—08	*ICC/NSSA Standard on the Design and Construction of Storm Shelters*	*R323.1*
ICC 600—08	*Standard for Residential Construction in High-wind Regions*	*R301.2.1.1*
IECC—12	*International Energy Conservation Code®*	*N1101.2*
IFC—12	*International Fire Code®*	*R102.7, M2201.7, G2402.3, G2412.2, G2423.1*
IFGC—12	*International Fuel Gas Code®*	*G2401.1, G2423.1*
IMC—12	*International Mechanical Code®*	*N1103.2.2, N1103.5, G2402.3*
IPC—12	*International Plumbing Code®*	*G2402.3*
IPMC—12	*International Property Maintenance Code®*	*R102.7*
IPSDC—12	*International Private Sewage Disposal Code®*	*AI101.1*

ISO

International Organization for Standardization
1, ch. de la Voie - Creuse
Case postale 56
CH-1211 Geneva 20, Switzerland

Standard reference number	Title	Referenced in code section number
15874—2002	Polypropylene Plastic Piping Systems for Hot and Cold Water Installations	Table M2101.1

MSS

Manufacturers Standardization Society of the Valve and Fittings Industry
127 Park Street, Northeast
Vienna, VA 22180

Standard reference number	Title	Referenced in code section number
SP-58—93	Pipe Hangers and Supports—Materials, Design and Manufacture	G2418.2

NAIMA

North American Insulation Manufacturers Association
44 Canal Center Plaza, Suite 310
Alexandria, VA 22314

Standard reference number	Title	Referenced in code section number
AH 116—09	Fibrous Glass Duct Construction Standards, Fifth Edition	M1601.1.1

NCMA

National Concrete Masonry Association
13750 Sunrise Valley Drive
Herndon, VA 20171-4662

Standard reference number	Title	Referenced in code section number
TR 68-A—75	Design and Construction of Plain and Reinforced Concrete Masonry and Basement and Foundation Walls	R404.1.1

NFPA

National Fire Protection Association
1 Batterymarch Park
Quincy, MA 02269

Standard reference number	Title	Referenced in code section number
13—*13*	Installation of Sprinkler Systems *as amended**	R302.3

See CCR, Title 24 Part 2 California Building Code, Chapter 35 or CCR, Title 24, Part 9 California Fire Code, Chapter 47 for amendments to NFPA 13.

13D—*13* Standard for the Installation of Sprinkler Systems in One- and Two-Family Dwellings and Manufactured Homes *as amended** *R313.1.1,* R313.2.1, *R313.3.1, R313.3.2, R313.3.2.3.1, R313.3.2.4.2, R313.3.6.1*

NFPA 13D, Amended Sections as follows:

Add a new definition as 3.3.9.1.1 and related annex note to read as follows:

3.3.9.1.1* Premixed Antifreeze Solution. A mixture of an antifreeze material with water that is prepared and factory-mixed by the manufacturer with a quality control procedure in place that ensures that the antifreeze solution remains homogeneous.

A.3.3.9.1.1 Where a tank is used as the water supply for the sprinkler system, the tank is not permitted to be filled with antifreeze.

Revise 4.1.4 and related annex note to read as follows:

4.1.4* Antifreeze Systems.

A.4.1.4 Sampling from the top and bottom of the system helps to determine if the solution has settled. Antifreeze solutions are heavier than water. If the antifreeze compound is separating from the water due to poor mixing, it will exhibit a higher concentration in the lower portion of the system than in the upper portions of the system. If the concentration is acceptable near the top, but too low near the water connection, it may mean that the system is becoming diluted near the water supply. If the concentration is either too high or too low in both the samples, it may mean that the wrong concentration was added to the system.

On an annual basis, test samples should be drawn from test valve B as shown in Figure 8.3.3.2.1(1), especially if the water portion of the system has been drained for maintenance or repairs. A small hydrometer can be used so that a small sample is sufficient. Where water appears at valve B, or where the sample indicates that the solution has become weakened, the entire system should be emptied and refilled with acceptable solution as previously described.

Where systems are drained in order to be refilled, it is not typically necessary to drain drops that are less than 36 inches in length. Most systems with drops have insufficient volume to cause a problem, even if slightly higher concentration solutions collect in the drops. For long drops with significant volume, consideration should be given to draining drops if there is evidence that unacceptably high concentrations of antifreeze have collected in these long drops.

NFPA—continued

When emptying and refilling antifreeze solutions, every attempt should be made to recycle the old solution with the antifreeze manufacturer rather than discarding it.

4.1.4.1 Annual Antifreeze Solution Test and Replacement Procedure.

4.1.4.1.1 Samples of antifreeze solution should be collected by qualified individuals in accordance with 4.1.4.1.1.1 or 4.1.4.1.1.2 on an annual basis.

4.1.4.1.1.1 The system shall be drained to verify that (a) the solution is in compliance with 8.3.3, and (b) the solution provides the necessary freeze protection. Solution samples shall be taken near the beginning and near the end of the draining process.

4.1.4.1.1.2* Solution samples shall be taken at the highest practical elevation and the lowest practical elevation of the system.

A.4.1.4.1.1.2 If not already present, test connections (valves) for collection of solution samples should be installed at the highest and lowest practical locations of the system or portion of the system containing antifreeze solution.

4.1.4.1.2 The two samples collected in accordance with the procedures specified in 4.1.4.1.1.1 or 4.1.4.1.1.2 shall be tested to verify that the specific gravity of both samples is similar and that the solution is in compliance with 8.3.3. The specific gravity of each solution shall be checked using a hydrometer with a suitable scale or a refractometer having a scale calibrated for the antifreeze solution.

4.1.4.1.3* If concentrations of the two samples collected in accordance with the procedures above are similar and in compliance with 8.3.3, then (a) the solution drained in accordance with 4.1.4.1.1.1 can be used to refill the system, or (b) the existing undrained solution tested in accordance with 4.1.4.1.1.2 shall be permitted to continue to be used. If the two samples are not similar and not in compliance with 8.3.3, then a solution in compliance with 8.3.3 shall be used to refill the system.

A.4.1.4.1.3 In the past, for some existing systems subject to extremely low temperatures, antifreeze solutions with concentrations greater than what is now permitted by NFPA 13D were used. Such high concentrations of antifreeze are no longer permitted. In situations where extremely low temperatures are anticipated, refilling the fire sprinkler system with a concentration of antifreeze solution currently permitted by the standard might not provide sufficient freeze protection without additional measures. Such measures might include converting the antifreeze system to another type of sprinkler system.

4.1.4.1.4 A tag shall be attached to the riser indicating the date the antifreeze solution was tested. The tag shall also indicate the type and concentration of antifreeze solution (by volume) with which the system is filled, the date the antifreeze was replaced (if applicable), the name of the contractor that tested and/or replaced the antifreeze solution, the contractor's license number, a statement indicating if the entire system was drained and replaced with antifreeze, and a warning to test the concentration of the antifreeze solutions at yearly intervals per NFPA 13D.

6.2* Water Supply Sources. *When the requirements of 6.2.2 are met,* the following water supply sources shall be considered to be acceptable by this standard:

(1) A connection to a reliable waterworks system with or without an automatically operated pump

(2) An elevated tank

(3) A pressure tank designed to American Society of Mechanical Engineers (ASME) standards for a pressure vessel with a reliable pressure source

(4) A stored water source with an automatically operated pump

(5) A well with a pump of sufficient capacity and pressure to meet the sprinkler system demand. The stored water requirement of 6.1.2 or 6.1.3 shall be permitted to be a combination of the water in the well (including the refill rate) plus the water in the holding tank if such tank can supply the sprinkler system.

6.2.2 Where a *well,* pump, tank *or combination thereof* is the source of supply for a fire sprinkler system, *the water supply shall serve both domestic and fire sprinkler systems, and* the following shall be met:

(1) A test connection shall be provided downstream of the pump that creates a flow of water equal to the smallest sprinkler on the system. The connection shall return water to the tank.

(2) Any disconnecting means for the pump shall be approved.

(3) A method for refilling the tank shall be piped to the tank.

(4) A method of seeing the water level in the tank shall be provided without having to open the tank.

(5) The pump shall not be permitted to sit directly on the floor.

6.2.2.1 Where a fire sprinkler system is supplied by a stored water source with an automatically operated means of pressurizing the system other than an electric pump, the water supply may serve the sprinkler system only.

6.2.4 Where a water supply serves both domestic and fire sprinkler systems, 5 gpm (19 L/min) shall be added to the sprinkler system demand at the point where the systems are connected, to determine the size of common piping and the size of the total water supply requirements where no provision is made to prevent flow into the domestic water system upon operation of a sprinkler.

Add an asterisk to 8.3.3 and add a new A.8.3.3 to read as follows:

8.3.3* Antifreeze Systems.

A.8.3.3 Where protection of pipes from freezing is a concern, options other than antifreeze are available. Such alternatives include running the piping in warm spaces, tenting insulation over pipe, dry-pipe systems, and preaction systems.

Revise 8.3.3.2.1 to read as follows:

8.3.3.2.1* Unless permitted by 8.3.3.2.1.1, antifreeze solutions shall be limited to premixed antifreeze solutions of glycerine (chemically pure or United States Pharmacopoeia 96.5%) at a maximum concentration of 50% by volume, propylene glycol at a maximum concentration of 40% by volume, or other solutions listed specifically for use in fire protection systems.

Add a new 8.3.3.2.1.1 to read as follows:

8.3.3.2.1.1 For existing systems, antifreeze solutions shall be limited to premixed antifreeze solutions of glycerine (chemically pure or United States Pharmacopoeia 96.5%) at a maximum concentration of 50% by volume, propylene glycol at a maximum concentration of 40% by volume, or other solutions listed specifically for use in fire protection systems.

Delete 8.3.3.2.2 and 8.3.3.2.3 and related Annex material A.8.3.3.2.3.

Move Table 8.3.3.2.3 to the annex and renumber as Table A.8.3.3.2.1 while deleting the rows in the table dealing with glycerine and 40% water, glycerine and 30% water, propylene glycol and 50% water and propylene glycol and 40% water. Add an annex note so that the annex and Table would appear as follows:

A.8.3.3.2.1 See Table A.8.3.3.2.1.

TABLE A.8.3.3.2.1 PROPERTIES OF GLYCERINE AND PROPYLENE GLYCOL

MATERIAL	SOLUTION (by volume)	SPECIFIC GRAVITY AT 60°F (15.6°C)	FREEZING POINT	
			°F	°C
Glycerine (C.P. or U.S.P. grade)	50% water	1.145	-20.9	-29.4
Hydrometer scale 1.000 to 1.200				
Propylene glycol	60% water	1.034	-6	-21.1
Hydrometer scale 1.000 to 1.200 (subdivisions 0.002)				

C.P.: Chemically Pure; U.S.P.: United States Pharmacopoeia 96.5%.

Renumber 8.3.3.2.3.1 to 8.3.3.2.2.

8.3.3.2.2 The concentration of antifreeze solutions shall be limited to the minimum necessary for the anticipated minimum temperature.

Delete 8.3.3.2.4, 8.3.3.2.5 and Table 8.3.3.2.5.

Renumber 8.3.3.2.6 as 8.3.3.2.3 and renumber A.8.3.3.2.6 as A.8.3.3.2.3. Also renumber Figure A.8.3.3.2.6 as Figure A.8.3.3.2.3.

8.3.3.2.3* An antifreeze solution with a freezing point below the expected minimum temperature for the locality shall be installed.

A.8.3.3.2.3 Beyond certain limits, an increased proportion of antifreeze does not lower the freezing point of the solution (see Figure A.8.3.3.2.3). Glycerine, diethylene glycol, ethylene glycol, and propylene glycol never should be used without mixing with water in the proper proportions, because these materials tend to thicken near 32°F (0°C).

Renumber 8.3.3.2.7 as 8.3.3.2.4 and revise to read as follows:

8.3.3.2.4 The specific gravity of the antifreeze shall be checked by a hydrometer with a scale having 0.002 subdivisions in accordance with Figures 8.3.3.2.4(a) and 8.3.3.2.4(b).

NFPA—continued

Renumber Figure 8.3.3.2.3(a) as Figure 8.3.3.2.4(a) and delete the 50% curve.

Renumber Figure 8.3.3.2.3(b) as Figure 8.3.3.2.4(b) and delete the 60% and 70% curves.

8.6.4* Sprinklers shall not be required in detached garages, open attached porches, carports with no habitable space above, and similar structures.

	13R—13	*See CCR, Title 24 Part 2 California Building Code, Chapter 35 or CCR, Title 24, Part 9 California Fire Code, Chapter 47 for amendments to NFPA 13.*
	31—06	Installation of Oil-burning Equipment M1801.3.1, M1805.3
	58—08	Liquefied Petroleum Gas Code G2412.2, G2414.6.2
	70—08	National Electrical Code ..... E3401.1, E3401.2, E4301.1, Table E4303.2, E4304.3, E4304.4
	72—*13*	National Fire Alarm *and Signalling* Code *as amended** R313.1, *R314.1, R314.2, R325.5.2.1, R235.5.2.4*

NFPA 72, Amended Sections as follows:

10.3.1 Equipment constructed and installed in conformity with this code shall be listed for the purpose for which it is used. *Fire alarm systems and components shall be California State Fire Marshal approved and listed in accordance with California Code of Regulations, Title 19, Division 1.*

10.3.3 All devices and appliances that receive their power from the initiating device circuit or signaling line circuit of a control unit shall be *California State Fire Marshal* listed for use with the control unit.

10.7.1 Where approved by the authority having jurisdiction, ECS priority signals when evaluated by stakeholders through risk analysis in accordance with 24.4.2.2 shall be permitted to take precedence over all other signals.

12.3.7 **Testing.** Household fire alarm systems shall be tested in *accordance with the manufacturer's published instructions* according to the methods of Table 14.4.2.2.

17.15 Fire Extinguisher Monitoring Device. A fire extinguisher monitoring device shall indicate those conditions for a specific fire extinguisher required by *California Code of Regulations, Title 19, Division 1, Chapter 1, Section 574.2 (c) and California Fire Code to a fire alarm control unit.*

21.3.6 Smoke detectors shall not be installed in unsprinklered elevator hoistways unless they are installed to activate the elevator hoistway smoke relief equipment *or where required by Chapter 30 of the California Building Code.*

23.8.5.1.2 Where connected to a supervising station, fire alarm systems employing automatic fire detectors or waterflow detection devices shall include a manual fire alarm box to initiate a signal to the supervising station.

Exception: Fire alarm systems dedicated to elevator recall control, and supervisory service *and fire sprinkler monitoring.*

23.8.5.4.1 Systems equipped with alarm verification features shall be permitted under the following conditions:

(1) The alarm verification feature is not initially enabled unless conditions or occupant activities that are expected to cause nuisance alarms are anticipated in the area that is protected by the smoke detectors. Enabling of the alarm verification feature shall be protected by password or limited access.

(2) A smoke detector that is continuously subjected to a smoke concentration above alarm threshold does not delay the system functions of Sections 10.6 through 10.13, 23.8.1.1, or 21.2.1 by more than 30 seconds.

(3) Actuation of an alarm-initiating device other than a smoke detector causes the system functions of 4.4.3, 6.8.1.1, or 6.16.2.1 without additional delay.

(4) The current status of the alarm verification feature is shown on the record of completion *(see Figure 4.5.2.1, item 10).*

(5) Operation of a patient room smoke detector in I-2 and R-2.1 Occupancies shall not include an alarm verification feature.

29.3.1 All devices, combinations of devices, and equipment to be installed in conformity with this chapter shall be approved *and* listed *by the California State Fire Marshal* for the purposes for which they are intended.

29.5.2.1.1* Smoke and Heat Alarms. Unless exempted by applicable laws, codes, or standards, smoke or heat alarms used to provide a fire-warning function, and when two or more alarms are installed within a dwelling unit, suite of rooms, or similar area, shall be arranged so that the operation of any smoke or heat alarm causes all alarms within these locations to sound.

Exception to 29.5.2.1.1 not adopted by the SFM

29.7.2.1 *The alarm verification feature shall not be used for household fire warning equipment.*

29.7.6.7.1 The alarm verification feature shall not be used for household fire warning equipment.

NFPA—continued

31—11	Installation of Oil-burning Equipment	M1801.3.1, M1805.3
58—11	Liquefied Petroleum Gas Code	G2412.2, G2414.6.2
70—11	National Electrical Code	E3401.1, E3401.2, E4301.1, Table E4303.2, E4304.3, E4304.4
72—*13*	National Fire Alarm *and Signalling* Code	R314.1, R314.2
82—09	Standard on Incinerators and Waste Linen Handling Systems and Equipment	G2427.2.3
85—11	Boiler and Construction Systems Hazards Code	G2452.1
211—*13*	Chimneys, Fireplaces, Vents and Solid Fuel Burning Appliances	R1002.5, G2427.5.5.1
252—03	*Standard Methods of Fire Tests of Door Assemblies*	*R327.6.3.2.3*
257—13	*Standard for Fire Test for Window and Glass Block Assemblies*	*R327.6.3.2.2*
259—*13*	Test Method for Potential Heat of Building Materials	R316.5.7, R316.5.8
275—*13*	Standard Method of Fire Tests for the Evaluation of Thermal Barriers Used Over Foam Plastic Insulation	R316.4
286—11	Standard Methods of Fire Tests for Evaluating Contribution of Wall and Ceiling Interior Finish to Room Fire Growth	R302.9.4, R316.4, R316.5.8, R316.6
501—*13*	Standard on Manufactured Housing	R202, AE201
720—*12*	Standard for the Installation of Carbon Monoxide (CO) Detectors and Warning Equipment	R-315.2
853—10	Standard for the Installation of Stationary Fuel Cell Power Systems	M1903.1

NSF

NSF International
789 N. Dixboro
Ann Arbor, MI 48105

Standard reference number	Title	Referenced in code section number
14—2008e	Plastics Piping System Components and Related Materials	M1301.4, P2608.3, P2908.3
42—2007ae	Drinking Water Treatment Units—Anesthetic Effects	P2908.1, P2908.3
44—2007	Residential Cation Exchange Water Softeners	P2908.1, P2908.3
53—2007a	Drinking Water Treatment Units—Health Effects	P2908.1, P2908.3
58—2007	Reverse Osmosis Drinking Water Treatment Systems	P2908.2, P2908.3
61—2008	Drinking Water System Components—Health Effects	P2608.5, P2722.1, P2903.9.4, P2905.4, P2905.5, P2905.6, P2907.3

PCA

Portland Cement Association
5420 Old Orchard Road
Skokie, IL 60077

Standard reference number	Title	Referenced in code section number
100—07	Prescriptive Design of Exterior Concrete Walls for One- and Two-family Dwellings (Pub. No. EB241)	R301.2.2.2.4, R301.2.2.3.4, R404.1.2, R404.1.2.2.1, R404.1.2.2.2, R404.1.2.4, R404.1.4.2, R611.1, R611.2, R611.9.2, R611.9.3

SBCA

Structural Building Components Association
6300 Enterprise Lane
Madison, WI 53719

Standard reference number	Title	Referenced in code section number
BCSI—2008	Building Component Safety Information Guide to Good Practice for Handling, Installing, Restraining & Bracing of Metal Plate Connected Wood Trusses	502.11.2, 802.10.3
CFS-BCSI—2008	Guide to Good Practice for Handling, Installing & Bracing of Cold-formed Steel Trusses	505.1.3, 804.3.7

SFM

State of California
Department of Forestry and Fire Protection
Office of the State Fire Marshal
P.O. Box 944246
Sacramento, CA 944246-2460

Standard reference number	*Title*	*Referenced in code section number*
SFM 12-3	*Releasing Systems for Security Bars in Dwellings*	*R310*
SFM 12-7A-1	*Exterior Wall Siding and Sheathing*	*R327.5.3, R327.6.3.1, R327.6.3.2.3*
SFM 12-7A-2	*Exterior Window*	*R327.5.3, R327.6.3.2.2*
SFM 12-7A-3	*Horizontal Protection Underside*	*R327.5.3, R327.6.2.3*
SFM 12-7A-4	*Decking*	*R327.5.3, R327.6.4.1.1*
SFM 12-7A-4A	*Decking Alternate Method A*	*R327.3.7, R327.9.3.4*
SFM 12-7A-5	*Ignition Resistant Building Material*	*R327.2, R327.3.7, R327.4.2, R327.6.3.2, R327.9.3.1*

(The Office of the State Fire Marshal standards referred to above are found in the California Code of Regulations, Title 24, Part 12.)

SMACNA

Sheet Metal & Air Conditioning Contractors National Assoc. Inc.
4021 Lafayette Center Road
Chantilly, VA 22021

Standard reference number	Title	Referenced in code section number
SMACNA—10	Fibrous Glass Duct Construction Standards (2003)	M1601.1.1, M1601.4.1
	HVAC Duct Construction Standards—Metal and Flexible (2005)	M1601.4.1

TMS

The Masonry Society
3970 Broadway, Suite 201-D
Boulder, CO 80304

Standard reference number	Title	Referenced in code section number
302—07	Standard Method for Determining the Sound Transmission Class Rating for Masonry Walls	AK102.1.1
402—11	Building Code Requirements for Masonry Structures	R404.1.1, R606.1, R606.1.1, R606.12.1, R606.12.2.3.1, R606.12.3.2, Table R703.4
403—10	Direct Design Handbook for Masonry Structures	R606.1, R606.1.1, R606.12.1, R606.12.3.1
602—11	Specification for Masonry Structures	R404.1.1, R606.12.3.1, Table R703.4

TPI

Truss Plate Institute
583 D'Onofrio Drive, Suite 200
Madison, WI 53719

Standard reference number	Title	Referenced in code section number
TPI 1—2007	National Design Standard for Metal-plate-connected Wood Truss Construction	R502.11.1, R802.10.2

UBC

International Code Council, Inc.
500 New Jersey Avenue, NW 6th Floor
Washington, DC 20001

Standard reference number	Title	Referenced in code section number
UBC Standard 15-2	*Test Standard for determining the Fire Retardancy of Roof-covering Materials*	*R902*
UBC Standard 15-3	*Wood Shakes*	*R902*
UBC Standard 15-24	*Wood Shingles*	*R902*

UL

Underwriters Laboratories, Inc.
333 Pfingsten Road
Northbrook, IL 60062

Standard reference number	Title	Referenced in code section number
17—2008	Vent or Chimney Connector Dampers for Oil-fired Appliances	M1802.2.2
55A—04	Materials for Built-up Roof Coverings	R905.9.2
58—96	Steel Underground Tanks for Flammable and Combustible Liquids—with Revisions through July 1998	M2201.1
80—07	Steel Tanks for Oil-burner Fuel	M2201.1
103—01	Factory-built Chimneys for Residential Type and Building Heating Appliances—with Revisions through March 2010	R202, R1005.3, G2430.1
127—08	Factory-built Fireplaces—with Revisions through January 2010	R1001.11, R1004.1, R1004.4, R1005.4, G2445.7,
174—04	Household Electric Storage Tank Water Heaters—with Revisions through November 2005	M2005.1
180—03	Liquid-level Indicating Gauges for Oil Burner Fuels—with Revision through March 2007	M2201.5
181—05	Factory-made Air Ducts and Air Connectors—with Revisions through May 2003	M1601.2, M1601.4.1
181A—05	Closure Systems for Use with Rigid Air Ducts and Air Connectors—with Revisions through December 1998	M1601.2, M1601.4.1
181B—05	Closure Systems for Use with Flexible Air Ducts and Air Connectors—with Revisions through August 2003	M1601.2, M1601.4.1
217—06	Single- and Multiple-station Smoke Alarms—with Revisions through April 2010	R314.1
263—03	Standards for Fire Test of Building Construction and Materials—with Revisions through October 2007	Table R302.1(2), R302.2, R302.3, R302.4.1, R316.4
325—02	Door, Drapery, Gate, Louver and Window Operations and Systems—with Revisions through February 2010	R309.4
343—97	Pumps for Oil-burning Appliances—with Revisions through May 2002	M2204.1
378—06	Draft Equipment	M1804.2.6
441—10	Gas Vents	G2426.1
508—99	Industrial Control Equipment—with Revisions through April 2010	M1411.3.1
536—97	Flexible Metallic Hose—with Revisions through June 2003	M2202.3
641—95	Type L, Low-temperature Venting Systems—with Revisions through July 2009	R202, R1003.11.5, M1804.2.4, G2426.1
651—05	Schedule 40 and Schedule 80 Rigid PVC Conduit and Fittings—with Revisions through March 2010	G2414.6.3
723—03	Standard for Test for Surface Burning Characteristics of Building Materials—with Revisions through May 2005	R302.9.3, R302.9.4, R302.10.1, R302.10.2, R316.3, R316.5.9, R316.5.10, R316.6 , R802.1.3, M1601.3
726—95	Oil-fired Boiler Assemblies—with Revisions through April 2010	M2001.1.1, M2006.1
727—06	Oil-fired Central Furnaces—with Revisions through April 2010	M1402.1
729—03	Oil-fired Floor Furnaces—with Revisions through April 2010	M1408.1
730—03	Oil-fired Wall Furnaces—with Revisions through April 2010	M1409.1
732—95	Oil-fired Storage Tank Water Heaters—with Revisions through April 2010	M2005.1
737—07	Fireplaces Stoves	M1414.1, M1901.2
790—04	Standard Test Methods for Fire Tests of Roof Coverings—with Revisions through October 2008	R902.1
795—06	Commercial-industrial Gas Heating Equipment—with Revisions through April 2010	G2442.1, G2452.1
834—04	Heating, Water Supply and Power Boilers—Electric—with Revisions through December 2009	M2001.1.1
842—07	Valves for Flammable Fluids	M2204.2
858—05	Household Electric Ranges—with Revisions through November 2007	M1901.2
875—09	Electric Dry-bath Heaters	M1902.2

UL—continued

896—93	Oil-burning Stoves—with Revisions through May 2010	M1410.1
923—08	Microwave Cooking Appliances—with Revisions through June 2010	M1504.1
959—01	Medium Heat Appliance Factory-built Chimneys—with Revisions through June 2010	R1005.6
1026—07	Electric Household Cooking and Food Serving Appliances	M1901.2
1040—96	Fire Test of Insulated Wall Construction—with Revisions through June 2001	R316.4, R316.6
1042—94	Electric Baseboard Heating Equipment—with Revisions through February 2008	M1405.1
1256—02	Fire Test of Roof Deck Construction	R906.1
1261—01	Electric Water Heaters for Pools and Tubs—with Revisions through June 2004	M2006.1
1453—04	Electronic Booster and Commercial Storage Tank Water Heaters—with Revisions through December 2009	M2005.1
1479—03	Fire Tests of Through-Penetration Firestops—with Revisions through March 2010	R302.4.1.2
1482—10	Solid-Fuel-type Room Heaters	R1002.2, R1002.5, M1410.1
1618—09	Wall Protectors, Floor Protectors, and Hearth Extensions	M1004.2
1673—96	Electric Space Heating Cables—with Revisions through July 2003	M1406.1
1693—02	Electric Radiant Heating Panels and Heating Panel Sets	M1406.1
1703—02	Flat-plate Photovoltaic Modules and Panels—with Revisions through April 2008	M2302.3
1741—99	Inverters, Converters, Controllers and Interconnection System Equipment with Distributed Energy Resources—with Revisions through November 2005	M2302.4
1715—97	Fire Test of Interior Finish Material—with Revisions through March 2004	R316.6
1738—06	Venting Systems for Gas-burning Appliances, Categories II, III and IV	G2426.1
1741—99	Inverters, Converters, Controllers and Interconnection System Equipment for use with Distributed Energy Resources—with Revisions through November 2005	M2302.4
1777—04	Chimney Liners with Revisions through June 2009	R1003.11.1, R1003.18, G2425.12, G2425.15.4, M1801.3.4,
1995—05	Heating and Cooling Equipment—with Revisions through July 2009	M1402.1, M1403.1, M1407.1, M1412.1, M1413.1
1996—04	Electric Duct Heaters—with Revisions through December 2006	M1402.1
2017—08	Standard for General-purpose Signaling Devices and Systems—with Revisions through October 2009	AG105.2
2523—03	Outline of Investigation for Sealed Fuel-fired Water Heaters and Boilers	M2001.1.1
2034—08	Standard for Single- and Multiple-station Carbon Monoxide Alarms	R315.4
2075—04	Standard for Gas and Vapor Detectors and Sensors—with Revisions through September 28, 2007	R315.2
2158A—06	Outline of Investigation for Clothes Dryer Transition Duct	M1502.4.3

ULC

Underwriters' Laboratories of Canada
7 Underwriters Road
Toronto, Ontario, Canada M1R 3B4

Standard reference number	Title	Referenced in code section number
CAN/ULC S 102—1988	Standard Methods for Test for Surface Burning Characteristics of Building Materials and Assemblies—with 2000 revisions	R302.10.2

US-FTC

United States-Federal Trade Commission
600 Pennsylvania Avenue NW
Washington, DC 20580

Standard reference number	Title	Referenced in code section number
CFR Title 16 (May 31, 2005)	*R*-value Rule	303.1.4

WDMA

Window & Door Manufacturers Association
1400 East Touhy Avenue, Suite 470
Des Plaines, IL 60018

Standard reference number	Title	Referenced in code section number
AAMA/WDMA/CSA 101/I.S2/A440—11	Specifications for Windows, Doors and Skylights	R308.6.9, R612.3, N1102.4.3

CALIFORNIA RESIDENTIAL CODE – MATRIX ADOPTION TABLE
APPENDIX A – SIZING AND CAPACITIES OF GAS PIPING

(Matrix Adoption Tables are non-regulatory, intended only as an aid to the user.
See Chapter 1 for state agency authority and building applications.)

Adopting agency	BSC	SFM	HCD			DSA		OSHPD				BSCC	DHS	AGR	DWR	CEC	CA	SL	SLC
			1	2	1/AC	AC	SS	1	2	3	4								
Adopt entire chapter																			
Adopt entire chapter as amended (amended sections listed below)																			
Adopt only those sections that are listed below																			
[California Code of Regulations, Title 19, Division 1]																			
Chapter / Section																			

* The California Code of Regulations (CCR), Title 19, Division 1 provisions that are found in the *California Fire Code* are a reprint from the current CCR, Title 19, Division 1 text for the code user's convenience only. The scope, applicability and appeals procedures of CCR, Title 19, Division I remain the same.

APPENDIX A

SIZING AND CAPACITIES OF GAS PIPING

(This appendix is informative and is not part of the code. This appendix is an excerpt from the 2012 *International Fuel Gas Code*, coordinated with the section numbering of the *International Residential Code*.)

A.1 General piping considerations. The first goal of determining the pipe sizing for a fuel gas piping system is to make sure that there is sufficient gas pressure at the inlet to each appliance. The majority of systems are residential and the appliances will all have the same, or nearly the same, requirement for minimum gas pressure at the appliance inlet. This pressure will be about 5-inch water column (w.c.) (1.25 kPa), which is enough for proper operation of the appliance regulator to deliver about 3.5-inches water column (w.c.) (875 kPa) to the burner itself. The pressure drop in the piping is subtracted from the source delivery pressure to verify that the minimum is available at the appliance.

There are other systems, however, where the required inlet pressure to the different appliances may be quite varied. In such cases, the greatest inlet pressure required must be satisfied, as well as the farthest appliance, which is almost always the critical appliance in small systems.

There is an additional requirement to be observed besides the capacity of the system at 100-percent flow. That requirement is that at minimum flow, the pressure at the inlet to any appliance does not exceed the pressure rating of the appliance regulator. This would seldom be of concern in small systems if the source pressure is $^1/_2$ psi (14-inch w.c.) (3.5 kPa) or less but it should be verified for systems with greater gas pressure at the point of supply.

To determine the size of piping used in a gas piping system, the following factors must be considered:

(1) Allowable loss in pressure from point of delivery to appliance.

(2) Maximum gas demand.

(3) Length of piping and number of fittings.

(4) Specific gravity of the gas.

(5) Diversity factor.

For any gas piping system, or special appliance, or for conditions other than those covered by the tables provided in this code, such as longer runs, greater gas demands or greater pressure drops, the size of each gas piping system should be determined by standard engineering practices acceptable to the code official.

A.2 Description of tables.

A.2.1 General. The quantity of gas to be provided at each *outlet* should be determined, whenever possible, directly from the manufacturer's gas input Btu/h rating of the appliance that will be installed. In case the ratings of the appliances to be installed are not known, Table 402.2 shows the approximate consumption (in Btu per hour) of certain types of typical household appliances.

To obtain the cubic feet per hour of gas required, divide the total Btu/h input of all appliances by the average Btu heating value per cubic feet of the gas. The average Btu per cubic feet of the gas in the area of the installation can be obtained from the serving gas supplier.

A.2.2 Low pressure natural gas tables. Capacities for gas at low pressure [less than 2.0 psig (13.8 kPa gauge)] in cubic feet per hour of 0.60 specific gravity gas for different sizes and lengths are shown in Tables 402.4(1) and 402.4(2) for

iron pipe or equivalent rigid pipe; in Tables 402.4(8) through 402.4(11) for smooth wall semirigid tubing; and in Tables 402.4(15) through 402.4(17) for corrugated stainless steel tubing. Tables 402.4(1) and 402.4(6) are based upon a pressure drop of 0.3-inch w.c. (75 Pa), whereas Tables 402.4(2), 402.4(9) and 402.4(15) are based upon a pressure drop of 0.5-inch w.c. (125 Pa). Tables 402.4(3), 402.4(4), 402.4(10), 402.4(11), 402.4(16) and 402.4(17) are special low-pressure applications based upon pressure drops greater than 0.5-inch w.c. (125 Pa). In using these tables, an allowance (in equivalent length of pipe) should be considered for any piping run with four or more fittings (see Table A.2.2).

A.2.3 Undiluted liquefied petroleum tables. Capacities in thousands of Btu per hour of undiluted liquefied petroleum gases based on a pressure drop of 0.5-inch w.c. (125 Pa) for different sizes and lengths are shown in Table 402.4(28) for iron pipe or equivalent rigid pipe, in Table 402.4(30) for smooth wall semi-rigid tubing, in Table 402.4(32) for corrugated stainless steel tubing, and in Tables 402.4(35) and 402.4(37) for polyethylene plastic pipe and tubing. Tables 402.4(33) and 402.4(34) for corrugated stainless steel tubing and Table 402.4(36) for polyethylene plastic pipe are based on operating pressures greater than $1^1/_2$ pounds per square inch (psi) (3.5 kPa) and pressure drops greater than 0.5-inch w.c. (125 Pa). In using these tables, an allowance (in equivalent length of pipe) should be considered for any piping run with four or more fittings [see Table A.2.2].

A.2.4 Natural gas specific gravity. Gas piping systems that are to be supplied with gas of a specific gravity of 0.70 or less can be sized directly from the tables provided in this code, unless the code official specifies that a gravity factor be applied. Where the specific gravity of the gas is greater than 0.70, the gravity factor should be applied.

Application of the gravity factor converts the figures given in the tables provided in this code to capacities for another gas of different specific gravity. Such application is accomplished by multiplying the capacities given in the tables by the multipliers shown in Table A.2.4. In case the exact specific gravity does not appear in the table, choose the next higher value specific gravity shown.

TABLE A.2.2
EQUIVALENT LENGTHS OF PIPE FITTINGS AND VALVES

		SCREWED FITTINGS[1]				90° WELDING ELBOWS AND SMOOTH BENDS[2]					
		45°/Ell	90°/Ell	180°close return bends	Tee	R/d = 1	R/d = $1^1/_3$	R/d = 2	R/d = 4	R/d = 6	R/d = 8
k factor =		0.42	0.90	2.00	1.80	0.48	0.36	0.27	0.21	0.27	0.36
L/d' ratio[4] n =		14	30	67	60	16	12	9	7	9	12
Nominal pipe size, inches	Inside diameter d, inches, Schedule 40[5]	L = Equivalent Length in Feet of Schedule 40 (Standard-weight) Straight Pipe[6]									
$^1/_2$	0.622	0.73	1.55	3.47	3.10	0.83	0.62	0.47	0.36	0.47	0.62
$^3/_4$	0.824	0.96	2.06	4.60	4.12	1.10	0.82	0.62	0.48	0.62	0.82
1	1.049	1.22	2.62	5.82	5.24	1.40	1.05	0.79	0.61	0.79	1.05
$1^1/_4$	1.380	1.61	3.45	7.66	6.90	1.84	1.38	1.03	0.81	1.03	1.38
$1^1/_2$	1.610	1.88	4.02	8.95	8.04	2.14	1.61	1.21	0.94	1.21	1.61
2	2.067	2.41	5.17	11.5	10.3	2.76	2.07	1.55	1.21	1.55	2.07
$2^1/_2$	2.469	2.88	6.16	13.7	12.3	3.29	2.47	1.85	1.44	1.85	2.47
3	3.068	3.58	7.67	17.1	15.3	4.09	3.07	2.30	1.79	2.30	3.07
4	4.026	4.70	10.1	22.4	20.2	5.37	4.03	3.02	2.35	3.02	4.03
5	5.047	5.88	12.6	28.0	25.2	6.72	5.05	3.78	2.94	3.78	5.05
6	6.065	7.07	15.2	33.8	30.4	8.09	6.07	4.55	3.54	4.55	6.07
8	7.981	9.31	20.0	44.6	40.0	10.6	7.98	5.98	4.65	5.98	7.98
10	10.02	11.7	25.0	55.7	50.0	13.3	10.0	7.51	5.85	7.51	10.0
12	11.94	13.9	29.8	66.3	59.6	15.9	11.9	8.95	6.96	8.95	11.9
14	13.13	15.3	32.8	73.0	65.6	17.5	13.1	9.85	7.65	9.85	13.1
16	15.00	17.5	37.5	83.5	75.0	20.0	15.0	11.2	8.75	11.2	15.0
18	16.88	19.7	42.1	93.8	84.2	22.5	16.9	12.7	9.85	12.7	16.9
20	18.81	22.0	47.0	105.0	94.0	25.1	18.8	14.1	11.0	14.1	18.8
24	22.63	26.4	56.6	126.0	113.0	30.2	22.6	17.0	13.2	17.0	22.6

(continued)

TABLE A.2.2—continued
EQUIVALENT LENGTHS OF PIPE FITTINGS AND VALVES

		MITER ELBOWS[3] (No. of miters)					WELDING TEES		VALVES (screwed, flanged, or welded)			
		1-45°	1-60°	1-90°	2-90°[5]	3-90°[5]	Forged	Miter[3]	Gate	Globe	Angle	Swing Check
k factor =		0.45	0.90	1.80	0.60	0.45	1.35	1.80	0.21	10	5.0	2.5
L/d' ratio[4] n =		15	30	60	20	15	45	60	7	333	167	83
Nominal pipe size, inches	Inside diameter d, inches, Schedule 40[6]	L = Equivalent Length in Feet of Schedule 40 (Standard-weight) Straight Pipe[6]										
1/2	0.622	0.78	1.55	3.10	1.04	0.78	2.33	3.10	0.36	17.3	8.65	4.32
3/4	0.824	1.03	2.06	4.12	1.37	1.03	3.09	4.12	0.48	22.9	11.4	5.72
1	1.049	1.31	2.62	5.24	1.75	1.31	3.93	5.24	0.61	29.1	14.6	7.27
1 1/4	1.380	1.72	3.45	6.90	2.30	1.72	5.17	6.90	0.81	38.3	19.1	9.58
1 1/2	1.610	2.01	4.02	8.04	2.68	2.01	6.04	8.04	0.94	44.7	22.4	11.2
2	2.067	2.58	5.17	10.3	3.45	2.58	7.75	10.3	1.21	57.4	28.7	14.4
2 1/2	2.469	3.08	6.16	12.3	4.11	3.08	9.25	12.3	1.44	68.5	34.3	17.1
3	3.068	3.84	7.67	15.3	5.11	3.84	11.5	15.3	1.79	85.2	42.6	21.3
4	4.026	5.04	10.1	20.2	6.71	5.04	15.1	20.2	2.35	112.0	56.0	28.0
5	5.047	6.30	12.6	25.2	8.40	6.30	18.9	25.2	2.94	140.0	70.0	35.0
6	6.065	7.58	15.2	30.4	10.1	7.58	22.8	30.4	3.54	168.0	84.1	42.1
8	7.981	9.97	20.0	40.0	13.3	9.97	29.9	40.0	4.65	22.0	111.0	55.5
10	10.02	12.5	25.0	50.0	16.7	12.5	37.6	50.0	5.85	278.0	139.0	69.5
12	11.94	14.9	29.8	59.6	19.9	14.9	44.8	59.6	6.96	332.0	166.0	83.0
14	13.13	16.4	32.8	65.6	21.9	16.4	49.2	65.6	7.65	364.0	182.0	91.0
16	15.00	18.8	37.5	75.0	25.0	18.8	56.2	75.0	8.75	417.0	208.0	104.0
18	16.88	21.1	42.1	84.2	28.1	21.1	63.2	84.2	9.85	469.0	234.0	117.0
20	18.81	23.5	47.0	94.0	31.4	23.5	70.6	94.0	11.0	522.0	261.0	131.0
24	22.63	28.3	56.6	113.0	37.8	28.3	85.0	113.0	13.2	629.0	314.0	157.0

For SI: 1 foot = 305 mm, 1 degree = 0.01745 rad.

Note: Values for welded fittings are for conditions where bore is not obstructed by weld spatter or backing rings. If appreciably obstructed, use values for "Screwed Fittings."

1. Flanged fittings have three-fourths the resistance of screwed elbows and tees.
2. Tabular figures give the extra resistance due to curvature alone to which should be added the full length of travel.
3. Small size socket-welding fittings are equivalent to miter elbows and miter tees.
4. Equivalent resistance in number of diameters of straight pipe computed for a value of (f - 0.0075) from the relation (n - $k/4f$).
5. For condition of minimum resistance where the centerline length of each miter is between d and 2 1/2 d.
6. For pipe having other inside diameters, the equivalent resistance may be computed from the above n values.

Source: Crocker, S. *Piping Handbook*, 4th ed., Table XIV, pp. 100-101. Copyright 1945 by McGraw-Hill, Inc. Used by permission of McGraw-Hill Book Company.

TABLE A.2.4
MULTIPLIERS TO BE USED WITH TABLES 402.4(1) THROUGH 402.4(22) WHERE THE SPECIFIC GRAVITY OF THE GAS IS OTHER THAN 0.60

SPECIFIC GRAVITY	MULTIPLIER	SPECIFIC GRAVITY	MULTIPLIER
0.35	1.31	1.00	0.78
0.40	1.23	1.10	0.74
0.45	1.16	1.20	0.71
0.50	1.10	1.30	0.68
0.55	1.04	1.40	0.66
0.60	1.00	1.50	0.63
0.65	0.96	1.60	0.61
0.70	0.93	1.70	0.59
0.75	0.90	1.80	0.58
0.80	0.87	1.90	0.56
0.85	0.84	2.00	0.55
0.90	0.82	2.10	0.54

A.2.5 Higher pressure natural gas tables. Capacities for gas at pressures 2.0 psig (13.8 kPa) or greater in cubic feet per hour of 0.60 specific gravity gas for different sizes and lengths are shown in Tables 402.4(5) through 402.4(7) for iron pipe or equivalent rigid pipe; Tables 402.4(12) to 402.4(14) for semirigid tubing; Tables 402.4(18) and 402.4(19) for corrugated stainless steel tubing; and Table 402.4(22) for polyethylene plastic pipe.

A.3 Use of capacity tables.

A.3.1 Longest length method. This sizing method is conservative in its approach by applying the maximum operating conditions in the system as the norm for the system and by setting the length of pipe used to size any given part of the piping system to the maximum value.

To determine the size of each section of gas piping in a system within the range of the capacity tables, proceed as follows (also see sample calculations included in this Appendix):

(1) Divide the piping system into appropriate segments consistent with the presence of tees, branch lines and main runs. For each segment, determine the gas load (assuming all appliances operate simultaneously) and its overall length. An allowance (in equivalent length of pipe) as determined from Table A.2.2 shall be considered for piping segments that include four or more fittings.

(2) Determine the gas demand of each appliance to be attached to the piping system. Where Tables 402.4(1) through 402.4(24) are to be used to select the piping size, calculate the gas demand in terms of cubic feet per hour for each piping system outlet. Where Tables 402.4(25) through 402.4(37) are to be used to select the piping size, calculate the gas demand in terms of thousands of Btu per hour for each piping system outlet.

(3) Where the piping system is for use with other than undiluted liquefied petroleum gases, determine the design system pressure, the allowable loss in pressure (pressure drop), and specific gravity of the gas to be used in the piping system.

(4) Determine the length of piping from the point of delivery to the most remote outlet in the building/piping system.

(5) In the appropriate capacity table, select the row showing the measured length or the next longer length if the table does not give the exact length. This is the only length used in determining the size of any section of gas piping. If the gravity factor is to be applied, the values in the selected row of the table are multiplied by the appropriate multiplier from Table A.2.4.

(6) Use this horizontal row to locate ALL gas demand figures for this particular system of piping.

(7) Starting at the most remote outlet, find the gas demand for that outlet in the horizontal row just selected. If the exact figure of demand is not shown, choose the next larger figure left in the row.

(8) Opposite this demand figure, in the first row at the top, the correct size of gas piping will be found.

(9) Proceed in a similar manner for each outlet and each section of gas piping. For each section of piping, determine the total gas demand supplied by that section.

When a large number of piping components (such as elbows, tees and valves) are installed in a pipe run, additional pressure loss can be accounted for by the use of equivalent lengths. Pressure loss across any piping component can be equated to the pressure drop through a length of pipe. The equivalent length of a combination of only four elbows/tees can result in a jump to the next larger length row, resulting in a significant reduction in capacity. The equivalent lengths in feet shown in Table A.2.2 have been computed on a basis that the inside diameter corresponds to that of Schedule 40 (standard-weight) steel pipe, which is close enough for most purposes involving other schedules of pipe. Where a more specific solution for equivalent length is desired, this may be made by multiplying the actual inside diameter of the pipe in inches by $n/12$, or the actual inside diameter in feet by n (n can be read from the table heading). The equivalent length values can be used with reasonable accuracy for copper or brass fittings and bends although the resistance per foot of copper or brass pipe is less than that of steel. For copper or brass valves, however, the equivalent length of pipe should be taken as 45 percent longer than the values in the table, which are for steel pipe.

A.3.2 Branch length method. This sizing method reduces the amount of conservatism built into the traditional Longest Length Method. The longest length as measured from the meter to the furthest remote appliance is only used to size the initial parts of the overall piping system. The Branch Length Method is applied in the following manner:

(1) Determine the gas load for each of the connected appliances.

(2) Starting from the meter, divide the piping system into a number of connected segments, and determine the length and amount of gas that each segment would carry assuming that all appliances were operated simultaneously. An allowance (in equivalent length of pipe) as determined from Table A.2.2 should be considered for piping segments that include four or more fittings.

(3) Determine the distance from the outlet of the gas meter to the appliance furthest removed from the meter.

(4) Using the longest distance (found in Step 3), size each piping segment from the meter to the most remote appliance outlet.

(5) For each of these piping segments, use the longest length and the calculated gas load for all of the connected appliances for the segment and begin the sizing process in Steps 6 through 8.

(6) Referring to the appropriate sizing table (based on operating conditions and piping material), find the longest length distance in the first column or the next larger distance if the exact distance is not listed. The use of alternative operating pressures and/or pressure drops will require the use of a different sizing table, but will not alter the sizing methodology. In many cases, the use of alternative operating pressures and/or pressure drops will require the approval of both the code official and the local gas serving utility.

(7) Trace across this row until the gas load is found or the closest larger capacity if the exact capacity is not listed.

(8) Read up the table column and select the appropriate pipe size in the top row. Repeat Steps 6, 7 and 8 for each pipe segment in the longest run.

(9) Size each remaining section of branch piping not previously sized by measuring the distance from the gas meter location to the most remote outlet in that branch, using the gas load of attached appliances and following the procedures of Steps 2 through 8.

A.3.3 Hybrid pressure method. The sizing of a 2 psi (13.8 kPa) gas piping system is performed using the traditional Longest Length Method but with modifications. The 2 psi (13.8 kPa) system consists of two independent pressure zones, and each zone is sized separately. The Hybrid Pressure Method is applied as follows:

The sizing of the 2 psi (13.8 kPa) section (from the meter to the line regulator) is as follows:

(1) Calculate the gas load (by adding up the name plate ratings) from all connected appliances. (In certain circumstances the installed gas load may be increased up to 50 percent to accommodate future addition of appliances.) Ensure that the line regulator capacity is adequate for the calculated gas load and that the required pressure drop (across the regulator) for that capacity does not exceed $^3/_4$ psi (5.2 kPa) for a 2 psi (13.8 kPa) system. If the pressure drop across the regulator is too high (for the connected gas load), select a larger regulator.

(2) Measure the distance from the meter to the line regulator located inside the building.

(3) If there are multiple line regulators, measure the distance from the meter to the regulator furthest removed from the meter.

(4) The maximum allowable pressure drop for the 2 psi (13.8 kPa) section is 1 psi (6.9 kPa).

(5) Referring to the appropriate sizing table (based on piping material) for 2 psi (13.8 kPa) systems with a 1 psi (6.9 kPa) pressure drop, find this distance in the first column, or the closest larger distance if the exact distance is not listed.

(6) Trace across this row until the gas load is found or the closest larger capacity if the exact capacity is not listed.

(7) Read up the table column to the top row and select the appropriate pipe size.

(8) If there are multiple regulators in this portion of the piping system, each line segment must be sized for its actual gas load, but using the longest length previously determined above.

The low pressure section (all piping downstream of the line regulator) is sized as follows:

(1) Determine the gas load for each of the connected appliances.

(2) Starting from the line regulator, divide the piping system into a number of connected segments and/or independent parallel piping segments, and determine the amount of gas that each segment would carry assuming that all appliances were operated simultaneously. An allowance (in equivalent length of pipe) as determined from Table A.2.2 should be considered for piping segments that include four or more fittings.

(3) For each piping segment, use the actual length or longest length (if there are sub-branchlines) and the calculated gas load for that segment and begin the sizing process as follows:

(a) Referring to the appropriate sizing table (based on operating pressure and piping material), find the longest length distance in the first column or the closest larger distance if the exact distance is not listed. The use of alternative operating pressures and/or pressure drops will require the use of a different sizing table, but will not alter the sizing methodology. In many cases, the use of alternative operating pressures and/or pressure drops may require the approval of the code official.

(b) Trace across this row until the appliance gas load is found or the closest larger capacity if the exact capacity is not listed.

(c) Read up the table column to the top row and select the appropriate pipe size.

(d) Repeat this process for each segment of the piping system.

A.3.4 Pressure drop per 100 feet method. This sizing method is less conservative than the others, but it allows the designer to immediately see where the largest pressure drop occurs in the system. With this information, modifications can be made to bring the total drop to the critical appliance within the limitations that are presented to the designer.

Follow the procedures described in the Longest Length Method for Steps (1) through (4) and (9).

For each piping segment, calculate the pressure drop based on pipe size, length as a percentage of 100 feet (30 480 mm) and gas flow. Table A.3.4 shows pressure drop per 100 feet (30 480 mm) for pipe sizes from $^1/_2$ inch (12.7 mm) through 2 inches (51 mm). The sum of pressure drops to the critical appliance is subtracted from the supply pressure to verify that sufficient pressure will be available. If not, the layout can be examined to find the high drop section(s) and sizing selections modified.

Note: Other values can be obtained by using the following equation:

$$\text{Desired Value} = MBH \times \sqrt{\frac{\text{Desired Drop}}{\text{Table Drop}}}$$

For example, if it is desired to get flow through $^3/_4$-inch (19.1 mm) pipe at 2 inches/100 feet, multiply the capacity of $^3/_4$-inch pipe at 1 inch/100 feet by the square root of the pressure ratio:

$$147\ MBH \times \sqrt{\frac{2''\ \text{w.c.}}{1''\ \text{w.c.}}} = 147 \times 1.414 = 208\ MBH$$

(MBH = 1000 Btu/h)

A.4 Use of sizing equations. Capacities of smooth wall pipe or tubing can also be determined by using the following formulae:

(1) High Pressure [1.5 psi (10.3 kPa) and above]:

$$Q = 181.6\sqrt{\frac{D^5 \cdot (P_1^2 - P_2^2) \cdot Y}{C_r \cdot fba \cdot L}}$$

$$= 2237\, D^{2.623}\left[\frac{(P_1^2 - P_2^2) \cdot Y}{C_r \cdot L}\right]^{0.541}$$

(2) Low Pressure [Less than 1.5 psi (10.3 kPa)]:

$$Q = 187.3\sqrt{\frac{D^5 \cdot \Delta H}{C_r \cdot fba \cdot L}}$$

$$= 2313 D^{2.623}\left(\frac{\Delta H}{C_r \cdot L}\right)^{0.541}$$

where:

Q = Rate, cubic feet per hour at 60°F and 30-inch mercury column

D = Inside diameter of pipe, in.

P_1 = Upstream pressure, psia

P_2 = Downstream pressure, psia

Y = Superexpansibility factor = 1/supercompressibility factor

C_r = Factor for viscosity, density and temperature*

$$= 0.00354\, ST\left(\frac{Z}{S}\right)^{0.152}$$

Note: See Table 402.4 for Y and C_r for natural gas and propane.

TABLE A.3.4
THOUSANDS OF BTU/H (MBH) OF NATURAL GAS PER 100 FEET OF PIPE AT VARIOUS PRESSURE DROPS AND PIPE DIAMETERS

PRESSURE DROP PER 100 FEET IN INCHES W.C.	PIPE SIZES (inch)					
	$^1/_2$	$^3/_4$	1	$1^1/_4$	$1^1/_2$	2
0.2	31	64	121	248	372	716
0.3	38	79	148	304	455	877
0.5	50	104	195	400	600	1160
1.0	71	147	276	566	848	1640

For SI: 1 inch = 25.4 mm, 1 foot = 304.8 mm.

S = Specific gravity of gas at 60°F and 30-inch mercury column (0.60 for natural gas, 1.50 for propane), or = 1488μ

T = Absolute temperature, °F or = $t + 460$

t = Temperature, °F

Z = Viscosity of gas, centipoise (0.012 for natural gas, 0.008 for propane), or = 1488μ

fba = Base friction factor for air at 60°F (CF = 1)

L = Length of pipe, ft

ΔH = Pressure drop, in. w.c. (27.7 in. H_2O = 1 psi)

(For SI, see Section 402.4)

A.5 Pipe and tube diameters. Where the internal diameter is determined by the formulas in Section 402.4, Tables A.5.1 and A.5.2 can be used to select the nominal or standard pipe size based on the calculated internal diameter.

TABLE A.5.1
SCHEDULE 40 STEEL PIPE STANDARD SIZES

NOMINAL SIZE (inch)	INTERNAL DIAMETER (inch)	NOMINAL SIZE (inch)	INTERNAL DIAMETER (inch)
1/4	0.364	1 1/2	1.610
3/8	0.493	2	2.067
1/2	0.622	2 1/2	2.469
3/4	0.824	3	3.068
1	1.049	3 1/2	3.548
1 1/4	1.380	4	4.026

For SI: 1 inch = 25.4 mm.

A.6 Examples of piping system design and sizing.

A.6.1 Example 1: Longest length method. Determine the required pipe size of each section and outlet of the piping system shown in Figure A.6.1, with a designated pressure drop of 0.5-inch w.c. (125 Pa) using the Longest Length Method. The gas to be used has 0.60 specific gravity and a heating value of 1,000 Btu/ft^3 (37.5 MJ/m^3).

Solution:

(1) Maximum gas demand for Outlet A:

$$\frac{\text{Consumption (rating plate input, or Table 402.2 if necessary}}{\text{Btu of gas}} =$$

$$\frac{35{,}000 \text{ Btu per hour rating}}{1{,}000 \text{ Btu per cubic foot}} = 35 \text{ cubic feet per hour} = 35 \text{ cfh}$$

Maximum gas demain for Outlet B:

$$\frac{\text{Consumption}}{\text{Btu of gas}} = \frac{75{,}000}{1{,}000} = 75 \text{ cfh}$$

Maximum gas demain for Outlet C:

$$\frac{\text{Consumption}}{\text{Btu of gas}} = \frac{35{,}000}{1{,}000} = 35 \text{ cfh}$$

Maximum gas demain for Outlet D:

$$\frac{\text{Consumption}}{\text{Btu of gas}} = \frac{100{,}000}{1{,}000} = 100 \text{ cfh}$$

(2) The length of pipe from the point of delivery to the most remote outlet (A) is 60 feet (18 288 mm). This is the only distance used.

(3) Using the row marked 60 feet (18 288 mm) in Table 402.4(2):

(a) Outlet A, supplying 35 cfh (0.99 m^3/hr), requires 1/2-inch pipe.

TABLE A.5.2
COPPER TUBE STANDARD SIZES

TUBE TYPE	NOMINAL OR STANDARD SIZE (inches)	INTERNAL DIAMETER (inches)
K	1/4	0.305
L	1/4	0.315
ACR (D)	3/8	0.315
ACR (A)	3/8	0.311
K	3/8	0.402
L	3/8	0.430
ACR (D)	1/2	0.430
ACR (A)	1/2	0.436
K	1/2	0.527
L	1/2	0.545
ACR (D)	5/8	0.545
ACR (A)	5/8	0.555
K	5/8	0.652
L	5/8	0.666
ACR (D)	3/4	0.666
ACR (A)	3/4	0.680
K	3/4	0.745
L	3/4	0.785
ACR	7/8	0.785
K	1	0.995
L	1	1.025
ACR	1 1/8	1.025
K	1 1/4	1.245
L	1 1/4	1.265
ACR	1 3/8	1.265
K	1 1/2	1.481
L	1 1/2	1.505
ACR	1 5/8	1.505
K	2	1.959
L	2	1.985
ACR	2 1/8	1.985
K	2 1/2	2.435
L	2 1/2	2.465
ACR	2 5/8	2.465
K	3	2.907
L	3	2.945
ACR	3 1/8	2.945

For SI: 1 inch = 25.4 mm.

(b) Outlet B, supplying 75 cfh (2.12 m^3/hr), requires $^3/_4$-inch pipe.

(c) Section 1, supplying Outlets A and B, or 110 cfh (3.11 m^3/hr), requires $^3/_4$-inch pipe.

(d) Section 2, supplying Outlets C and D, or 135 cfh (3.82 m^3/hr), requires $^3/_4$-inch pipe.

(e) Section 3, supplying Outlets A, B, C and D, or 245 cfh (6.94 m^3/hr), requires 1-inch pipe.

(4) If a different gravity factor is applied to this example, the values in the row marked 60 feet (18 288 mm) of Table 402.4(2) would be multiplied by the appropriate multiplier from Table A.2.4 and the resulting cubic feet per hour values would be used to size the piping.

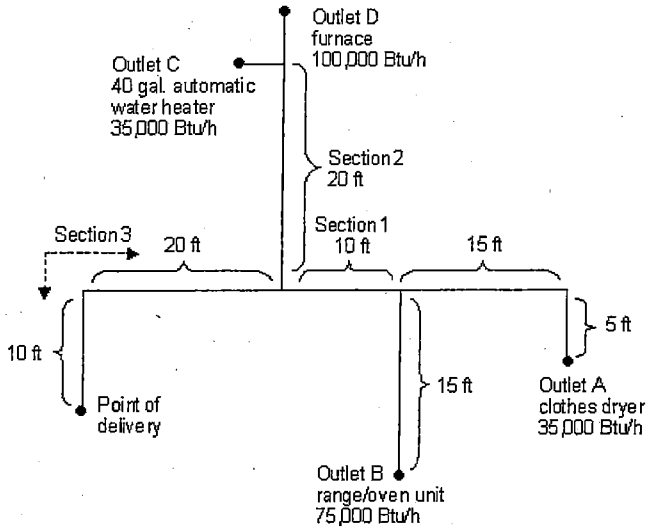

FIGURE A.6.1
PIPING PLAN SHOWING A STEEL PIPING SYSTEM

A.6.2 Example 2: Hybrid or dual pressure systems. Determine the required CSST size of each section of the piping system shown in Figure A.6.2, with a designated pressure drop of 1 psi (6.9 kPa) for the 2 psi (13.8 kPa) section and 3-inch w.c. (0.75 kPa) pressure drop for the 13-inch w.c. (2.49 kPa) section. The gas to be used has 0.60 specific gravity and a heating value of 1,000 Btu/ft^3 (37.5 MJ/ m^3).

Solution:

(1) Size 2 psi (13.8 kPa) line using Table 402.4(18).

(2) Size 10-inch w.c. (2.5 kPa) lines using Table 402.4(16).

(3) Using the following, determine if sizing tables can be used.

(a) Total gas load shown in Figure A.6.2 equals 110 cfh (3.11 m^3/hr).

(b) Determine pressure drop across regulator [see notes in Table 402.4(18)].

(c) If pressure drop across regulator exceeds $^3/_4$ psig (5.2 kPa), Table 402.4(18) cannot be used. Note: If pressure drop exceeds $^3/_4$ psi (5.2 kPa), then a larger regulator must be selected or an alternative sizing method must be used.

(d) Pressure drop across the line regulator [for 110 cfh (3.11 m^3/hr)] is 4-inch w.c. (0.99 kPa) based on manufacturer's performance data.

(e) Assume the CSST manufacturer has tubing sizes or EHDs of 13, 18, 23 and 30.

(4) Section A [2 psi (13.8 kPa) zone]

(a) Distance from meter to regulator = 100 feet (30 480 mm).

(b) Total load supplied by A = 110 cfh (3.11 m^3/hr) (furnace + water heater + dryer).

(c) Table 402.4(18) shows that EHD size 18 should be used.

Note: It is not unusual to oversize the supply line by 25 to 50 percent of the as-installed load. EHD size 18 has a capacity of 189 cfh (5.35 m^3/hr).

(5) Section B (low pressure zone)

(a) Distance from regulator to furnace is 15 feet (4572 mm).

(b) Load is 60 cfh (1.70 m^3/hr).

(c) Table 402.4(16) shows that EHD size 13 should be used.

(6) Section C (low pressure zone)

(a) Distance from regulator to water heater is 10 feet (3048 mm).

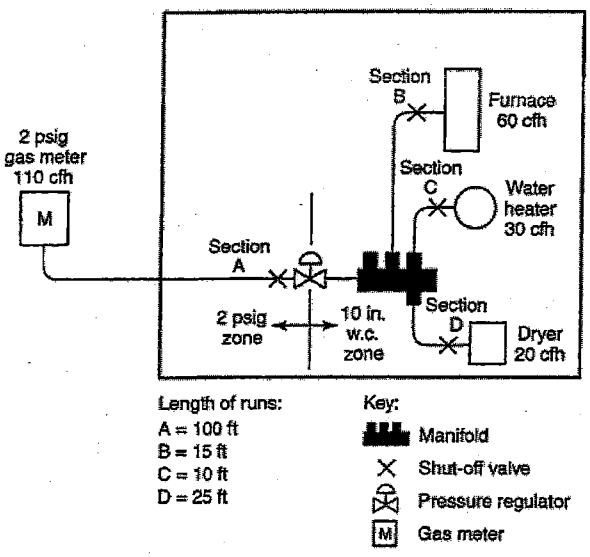

FIGURE A.6.2
PIPING PLAN SHOWING A CSST SYSTEM

(b) Load is 30 cfh (0.85 m^3/hr).

(c) Table 402.4(16) shows that EHD size 13 should be used.

(7) Section D (low pressure zone)

(a) Distance from regulator to dryer is 25 feet (7620 mm).

(b) Load is 20 cfh (0.57 m^3/hr).

(c) Table 402.4(16) shows that EHD size 13 should be used.

A.6.3 Example 3: Branch length method. Determine the required semirigid copper tubing size of each section of the piping system shown in Figure A.6.3, with a designated pressure drop of 1-inch w.c. (250 Pa) (using the Branch Length Method). The gas to be used has 0.60 specific gravity and a heating value of 1,000 Btu/ft^3 (37.5 MJ/m^3).

Solution:

(1) Section A

(a) The length of tubing from the point of delivery to the most remote appliance is 50 feet (15 240 mm), A + C.

(b) Use this longest length to size Sections A and C.

(c) Using the row marked 50 feet (15 240 mm) in Table 402.4(10), Section A, supplying 220 cfh (6.2 m^3/hr) for four appliances requires 1-inch tubing.

(2) Section B

(a) The length of tubing from the point of delivery to the range/oven at the end of Section B is 30 feet (9144 mm), A + B.

(b) Use this branch length to size Section B only.

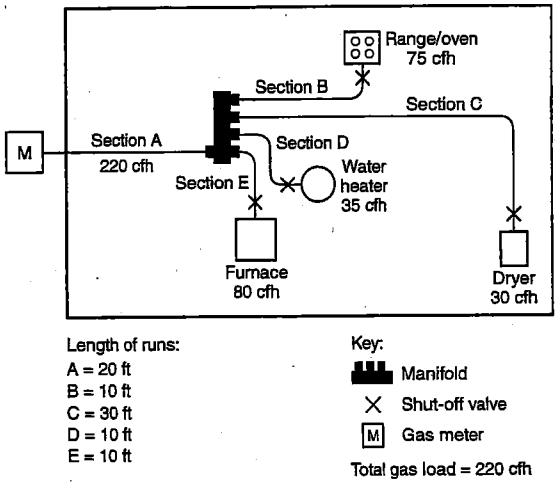

FIGURE A.6.3
PIPING PLAN SHOWING A COPPER TUBING SYSTEM

(c) Using the row marked 30 feet (9144 mm) in Table 402.4(10), Section B, supplying 75 cfh (2.12 m^3/hr) for the range/oven requires $^1/_2$-inch tubing.

(3) Section C

(a) The length of tubing from the point of delivery to the dryer at the end of Section C is 50 feet (15 240 mm), A + C.

(b) Use this branch length (which is also the longest length) to size Section C.

(c) Using the row marked 50 feet (15 240 mm) in Table 402.4(10), Section C, supplying 30 cfh (0.85 m^3/hr) for the dryer requires $^3/_8$-inch tubing.

(4) Section D

(a) The length of tubing from the point of delivery to the water heater at the end of Section D is 30 feet (9144 mm), A + D.

(b) Use this branch length to size Section D only.

(c) Using the row marked 30 feet (9144 mm) in Table 402.4(10), Section D, supplying 35 cfh (0.99 m^3/hr) for the water heater requires $^3/_8$-inch tubing.

(5) Section E

(a) The length of tubing from the point of delivery to the furnace at the end of Section E is 30 feet (9144 mm), A + E.

(b) Use this branch length to size Section E only.

(c) Using the row marked 30 feet (9144 mm) in Table 402.4(10), Section E, supplying 80 cfh (2.26 m^3/hr) for the furnace requires $^1/_2$-inch tubing.

A.6.4 Example 4: Modification to existing piping system. Determine the required CSST size for Section G (retrofit application) of the piping system shown in Figure A.6.4, with a designated pressure drop of 0.5-inch w.c. (125 Pa) using the branch length method. The gas to be used has 0.60 specific gravity and a heating value of 1,000 Btu/ft^3 (37.5 MJ/m^3).

Solution:

(1) The length of pipe and CSST from the point of delivery to the retrofit appliance (barbecue) at the end of Section G is 40 feet (12 192 mm), A + B + G.

(2) Use this branch length to size Section G.

(3) Assume the CSST manufacturer has tubing sizes or EHDs of 13, 18, 23 and 30.

(4) Using the row marked 40 feet (12 192 mm) in Table 402.4(15), Section G, supplying 40 cfh (1.13 m^3/hr) for the barbecue requires EHD 18 CSST.

(5) The sizing of Sections A, B, F and E must be checked to ensure adequate gas carrying capacity since an appliance has been added to the piping system (see A.6.1 for details).

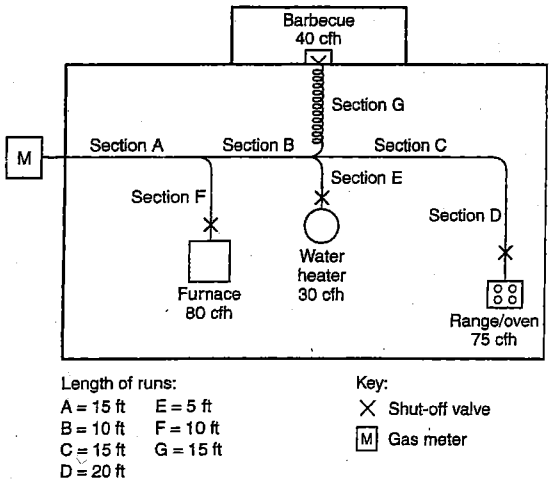

FIGURE A.6.4
PIPING PLAN SHOWING A MODIFICATION TO EXISTING PIPING SYSTEM

A.6.5 Example 5: Calculating pressure drops due to temperature changes. A test piping system is installed on a warm autumn afternoon when the temperature is 70°F (21°C). In accordance with local custom, the new piping system is subjected to an air pressure test at 20 psig (138 kPa). Overnight, the temperature drops and when the inspector shows up first thing in the morning the temperature is 40°F (4°C).

If the volume of the piping system is unchanged, then the formula based on Boyle's and Charles' law for determining the new pressure at a reduced temperature is as follows:

$$\frac{T_1}{T_2} = \frac{P_1}{P_2}$$

where:

T_1 = Initial temperature, absolute ($T_1 + 459$)

T_2 = Final temperature, absolute ($T_2 + 459$)

P_1 = Initial pressure, psia ($P_1 + 14.7$)

P_2 = Final pressure, psia ($P_2 + 14.7$)

$$\frac{(70+459)}{(40+459)} = \frac{(20+14.7)}{(P_2+14.7)}$$

$$\frac{529}{499} = \frac{34.7}{(P_2+14.7)}$$

$$(P_2+14.7)\times\frac{529}{499} = 34.7$$

$$(P_2+14.7)\times\frac{34.7}{1.060}$$

P_2 = 32.7 - 14.7

P_2 = 18 psig

Therefore, the gauge could be expected to register 18 psig (124 kPa) when the ambient temperature is 40°F (4°C).

A.6.6 Example 6: Pressure drop per 100 feet of pipe method. Using the layout shown in Figure A.6.1 and ΔH = pressure drop, in w.c. (27.7 in. H_2O = 1 psi), proceed as follows:

(1) Length to A = 20 feet, with 35,000 Btu/hr.

For $^1/_2$-inch pipe, $\Delta H = {}^{20\text{ feet}}/_{100\text{ feet}} \times 0.3$ inch w.c. = 0.06 in w.c.

(2) Length to B = 15 feet, with 75,000 Btu/hr.

For $^3/_4$-inch pipe, $\Delta H = {}^{15\text{ feet}}/_{100\text{ feet}} \times 0.3$ inch w.c. = 0.045 in w.c.

(3) Section 1 = 10 feet, with 110,000 Btu/hr. Here there is a choice:

For 1 inch pipe: $\Delta H = {}^{10\text{ feet}}/_{100\text{ feet}} \times 0.2$ inch w.c. = 0.02 in w.c.

For $^3/_4$-inch pipe: $\Delta H = {}^{10\text{ feet}}/_{100\text{ feet}} \times$ [0.5 inch w.c. + ${}^{(110{,}000\text{ Btu/hr}-104{,}000\text{ Btu/hr})}/_{(147{,}000\text{ Btu/hr}-104{,}000\text{ Btu/hr})} \times$ (1.0 inches w.c. - 0.5 inch w.c.)] = 0.1 × 0.57 inch w.c.≈ 0.06 inch w.c.

Note that the pressure drop between 104,000 Btu/hr and 147,000 Btu/hr has been interpolated as 110,000 Btu/hr.

(4) Section 2 = 20 feet, with 135,000 Btu/hr. Here there is a choice:

For 1-inch pipe: $\Delta H = {}^{20\text{ feet}}/_{100\text{ feet}} \times$ [0.2 inch w.c. + ${}^{(14{,}000\text{ Btu/hr})}/_{(27{,}000\text{ Btu/hr})} \times 0.1$ inch w.c.] = 0.05 inch w.c.

For $^3/_4$-inch pipe: $\Delta H = {}^{20\text{ feet}}/_{100\text{ feet}} \times 1.0$ inch w.c. = 0.2 inch w.c.

Note that the pressure drop between 121,000 Btu/hr and 148,000 Btu/hr has been interpolated as 135,000 Btu/hr, but interpolation for the ¾-inch pipe (trivial for 104,000 Btu/hr to 147,000 Btu/hr) was not used.

(5) Section 3 = 30 feet, with 245,000 Btu/hr. Here there is a choice:

For 1-inch pipe: $\Delta H = {}^{30\text{ feet}}/_{100\text{ feet}} \times 1.0$ inches w.c. = 0.3 inch w.c.

For $1^1/_4$-inch pipe: $\Delta H = {}^{30\text{ feet}}/_{100\text{ feet}} \times 0.2$ inch w.c. = 0.06 inch w.c.

Note that interpolation for these options is ignored since the table values are close to the 245,000 Btu/hr carried by that section.

(6) The total pressure drop is the sum of the section approaching A, Sections 1 and 3, or either of the following, depending on whether an absolute minimum is needed or the larger drop can be accommodated.

Minimum pressure drop to farthest appliance:

ΔH = 0.06 inch w.c. + 0.02 inch w.c. + 0.06 inch w.c. = 0.14 inch w.c.

Larger pressure drop to the farthest appliance:

ΔH = 0.06 inch w.c. + 0.06 inch w.c. + 0.3 inch w.c. = 0.42 inch w.c.

Notice that Section 2 and the run to B do not enter into this calculation, provided that the appliances have similar input pressure requirements.

For SI units: 1 Btu/hr = 0.293 W, 1 cubic foot = 0.028 m^3, 1 foot = 0.305 m, 1 inch w.c. = 249 Pa.

CALIFORNIA RESIDENTIAL CODE – MATRIX ADOPTION TABLE
APPENDIX B – SIZING OF VENTING SYSTEMS SERVING APPLIANCES EQUIPPED WITH DRAFT HOODS, CATEGORY I APPLIANCES, AND APPLIANCES LISTED FOR USE WITH TYPE B VENTS

(Matrix Adoption Tables are non-regulatory, intended only as an aid to the user. See Chapter 1 for state agency authority and building applications.)

Adopting agency	BSC	SFM	HCD			DSA		OSHPD				BSCC	DHS	AGR	DWR	CEC	CA	SL	SLC
			1	2	1/AC	AC	SS	1	2	3	4								
Adopt entire chapter																			
Adopt entire chapter as amended (amended sections listed below)																			
Adopt only those sections that are listed below																			
[California Code of Regulations, Title 19, Division 1]																			
Chapter / Section																			

* The California Code of Regulations (CCR), Title 19, Division 1 provisions that are found in the *California Fire Code* are a reprint from the current CCR, Title 19, Division 1 text for the code user's convenience only. The scope, applicability and appeals procedures of CCR, Title 19, Division I remain the same.

APPENDIX B

SIZING OF VENTING SYSTEMS SERVING APPLIANCES EQUIPPED WITH DRAFT HOODS, CATEGORY I APPLIANCES, AND APPLIANCES LISTED FOR USE WITH TYPE B VENTS

(This appendix is informative and is not part of the code. This appendix is an excerpt from the 2012 *International Fuel Gas Code,* coordinated with the section numbering of the *International Residential Code.*)

EXAMPLES USING SINGLE APPLIANCE VENTING TABLES

Example 1: Single draft-hood-equipped appliance.

An installer has a 120,000 British thermal unit (Btu) per hour input appliance with a 5-inch-diameter draft hood outlet that needs to be vented into a 10-foot-high Type B vent system. What size vent should be used assuming (a) a 5-foot lateral single-wall metal vent connector is used with two 90-degree elbows, or (b) a 5-foot lateral single-wall metal vent connector is used with three 90-degree elbows in the vent system?

Solution:

Table 504.2(2) should be used to solve this problem, because single-wall metal vent connectors are being used with a Type B vent.

(a) Read down the first column in Table 504.2(2) until the row associated with a 10-foot height and 5-foot lateral is found. Read across this row until a vent capacity greater than 120,000 Btu per hour is located in the shaded columns labeled "NAT Max" for draft-hood-equipped appliances. In this case, a 5-inch-diameter vent has a capacity of 122,000 Btu per hour and may be used for this application.

(b) If three 90-degree elbows are used in the vent system, then the maximum vent capacity listed in the tables must be reduced by 10 percent (see Section 504.2.3 for single appliance vents). This implies that the 5-inch-diameter vent has an adjusted capacity of only 110,000 Btu per hour. In this case, the vent system must be increased to 6 inches in diameter (see calculations below).

122,000 (0.90) = 110,000 for 5-inch vent
From Table 504.2(2), Select 6-inch vent
186,000 (0.90) = 167,000; This is greater than the required 120,000. Therefore, use a 6-inch vent and connector where three elbows are used.

Example 2: Single fan-assisted appliance.

An installer has an 80,000 Btu per hour input fan-assisted appliance that must be installed using 10 feet of lateral connector attached to a 30-foot-high Type B vent. Two 90-degree elbows are needed for the installation. Can a single-wall metal vent connector be used for this application?

Solution:

Table 504.2(2) refers to the use of single-wall metal vent connectors with Type B vent. In the first column find the row

associated with a 30-foot height and a 10-foot lateral. Read across this row, looking at the FAN Min and FAN Max columns, to find that a 3-inch-diameter single-wall metal vent connector is not recommended. Moving to the next larger size single wall connector (4 inches), note that a 4-inch-diameter single-wall metal connector has a recommended minimum vent capacity of 91,000 Btu per hour and a recommended maximum vent capacity of 144,000 Btu per hour. The 80,000 Btu per hour fan-assisted appliance is outside this range, so the conclusion is that a single-wall metal vent connector cannot be used to vent this appliance using 10 feet of lateral for the connector.

However, if the 80,000 Btu per hour input appliance could be moved to within 5 feet of the vertical vent, then a 4-inch single-wall metal connector could be used to vent the appliance. Table 504.2(2) shows the acceptable range of vent capacities for a 4-inch vent with 5 feet of lateral to be between 72,000 Btu per hour and 157,000 Btu per hour.

If the appliance cannot be moved closer to the vertical vent, then Type B vent could be used as the connector material. In this case, Table 504.2(1) shows that for a 30-foot-high vent with 10 feet of lateral, the acceptable range of vent capacities for a 4-inch-diameter vent attached to a fan-assisted appliance is between 37,000 Btu per hour and 150,000 Btu per hour.

Example 3: Interpolating between table values.

An installer has an 80,000 Btu per hour input appliance with a 4-inch-diameter draft hood outlet that needs to be vented into a 12-foot-high Type B vent. The vent connector has a 5-foot lateral length and is also Type B. Can this appliance be vented using a 4-inch-diameter vent?

Solution:

Table 504.2(1) is used in the case of an all Type B vent system. However, since there is no entry in Table 504.2(1) for a height of 12 feet, interpolation must be used. Read down the 4-inch diameter NAT Max column to the row associated with 10-foot height and 5-foot lateral to find the capacity value of 77,000 Btu per hour. Read further down to the 15-foot height, 5-foot lateral row to find the capacity value of 87,000 Btu per hour. The difference between the 15-foot height capacity value and the 10-foot height capacity value is 10,000 Btu per hour. The capacity for a vent system with a 12-foot height is equal to the capacity for a 10-foot height plus $^2/_5$ of the difference between the 10-foot and 15-foot height values, or $77{,}000 + {}^2/_5\,(10{,}000) = 81{,}000$ Btu per hour. Therefore, a 4-inch-diameter vent may be used in the installation.

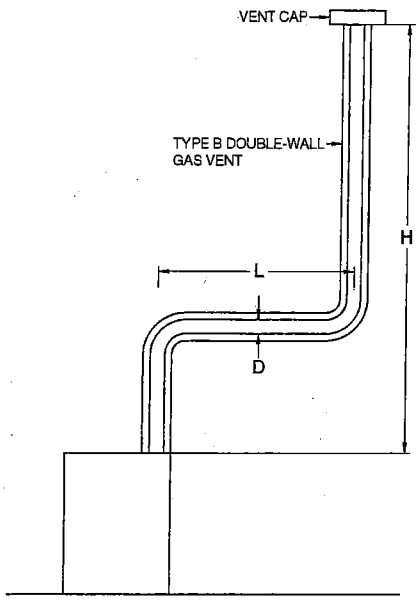

For SI: 1 foot = 304.8 mm, 1 British thermal unit per hour = 0.2931 W.

Table 504.2(1) is used when sizing Type B double-wall gas vent connected directly to the appliance.

Note: The appliance may be either Category I draft hood equipped or fan-assisted type.

FIGURE B-1
TYPE B DOUBLE-WALL VENT SYSTEM SERVING A SINGLE APPLIANCE WITH A TYPE B DOUBLE-WALL VENT

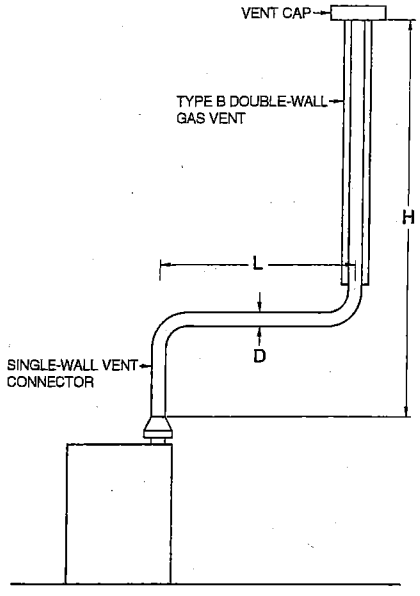

For SI: 1 foot = 304.8 mm, 1 British thermal unit per hour = 0.2931 W.

Table 504.2(2) is used when sizing a single-wall metal vent connector attached to a Type B double-wall gas vent.

Note: The appliance may be either Category I draft hood equipped or fan-assisted type.

FIGURE B-2
TYPE B DOUBLE-WALL VENT SYSTEM SERVING A SINGLE APPLIANCE WITH A SINGLE-WALL METAL VENT CONNECTOR

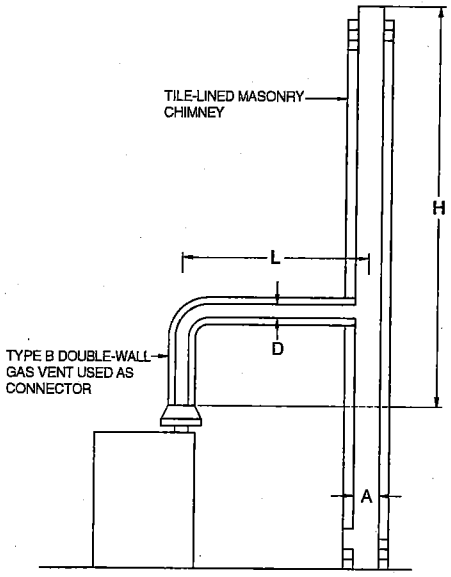

Table 504.2(3) is used when sizing a Type B double-wall gas vent connector attached to a tile-lined masonry chimney.

Note: "A" is the equivalent cross-sectional area of the tile liner.

Note: The appliance may be either Category I draft hood equipped or fan-assisted type.

FIGURE B-3
VENT SYSTEM SERVING A SINGLE APPLIANCE WITH A MASONRY CHIMNEY OF TYPE B DOUBLE-WALL VENT CONNECTOR

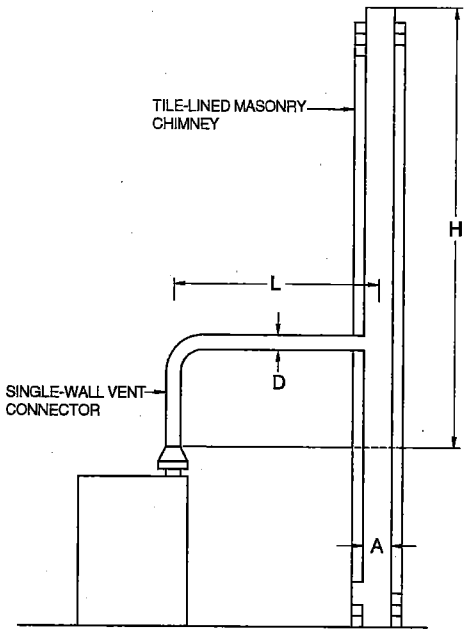

Table 504.2(4) is used when sizing a single-wall vent connector attached to a tile-lined masonry chimney.

Note: "A" is the equivalent cross-sectional area of the tile liner.

Note: The appliance may be either Category I draft hood equipped or fan-assisted type.

FIGURE B-4
VENT SYSTEM SERVING A SINGLE APPLIANCE USING A MASONRY CHIMNEY AND A SINGLE-WALL METAL VENT CONNECTOR

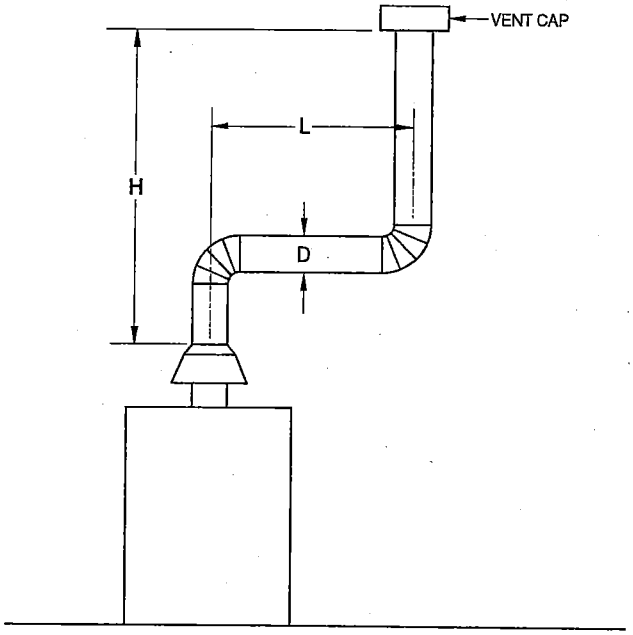

Asbestos cement Type B or single-wall metal vent serving a single draft-hood-equipped appliance [see Table 504.2(5)].

FIGURE B-5
ASBESTOS CEMENT TYPE B OR SINGLE-WALL METAL VENT SYSTEM SERVING A SINGLE DRAFT-HOOD-EQUIPPED APPLIANCE

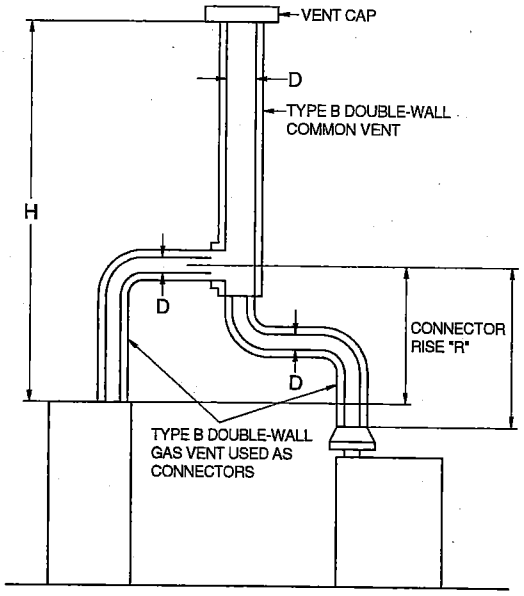

Table 504.3(1) is used when sizing Type B double-wall vent connectors attached to a Type B double-wall common vent.

Note: Each appliance may be either Category I draft hood equipped or fan-assisted type.

FIGURE B-6
VENT SYSTEM SERVING TWO OR MORE APPLIANCES WITH TYPE B DOUBLE-WALL VENT AND TYPE B DOUBLE-WALL VENT CONNECTOR

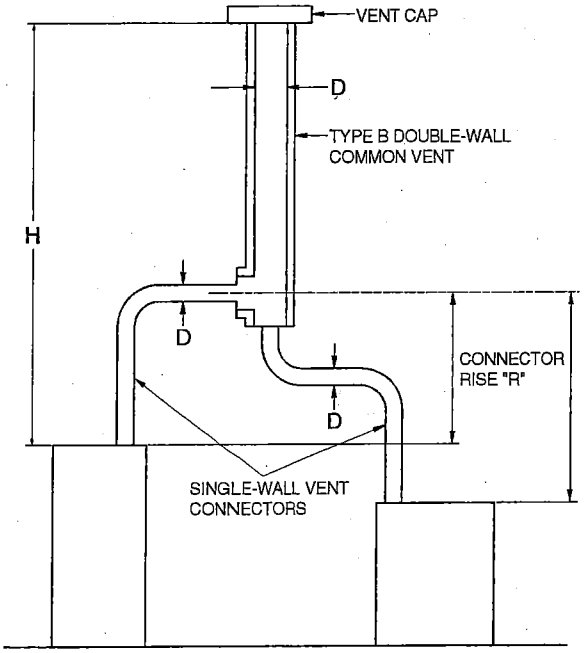

Table 504.3(2) is used when sizing single-wall vent connectors attached to a Type B double-wall common vent.

Note: Each appliance may be either Category I draft hood equipped or fan-assisted type.

FIGURE B-7
VENT SYSTEM SERVING TWO OR MORE APPLIANCES WITH TYPE B DOUBLE-WALL VENT AND SINGLE-WALL METAL VENT CONNECTORS

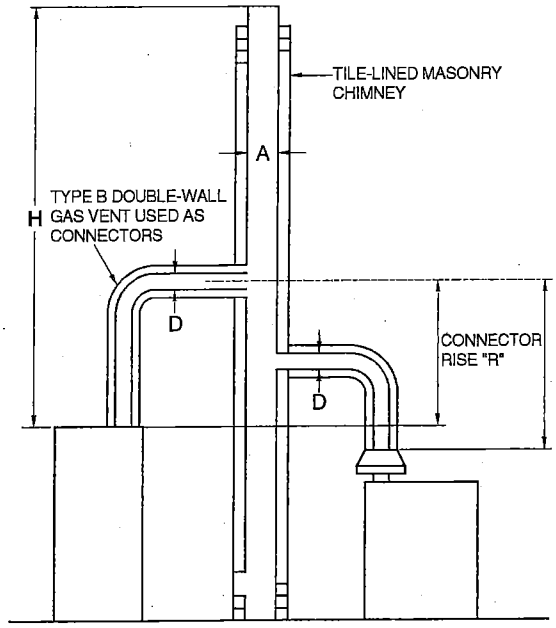

Table 504.3(3) is used when sizing Type B double-wall vent connectors attached to a tile-lined masonry chimney.

Note: "A" is the equivalent cross-sectional area of the tile liner.

Note: Each appliance may be either Category I draft hood equipped or fan-assisted type.

FIGURE B-8
MASONRY CHIMNEY SERVING TWO OR MORE APPLIANCES WITH TYPE B DOUBLE-WALL VENT CONNECTOR

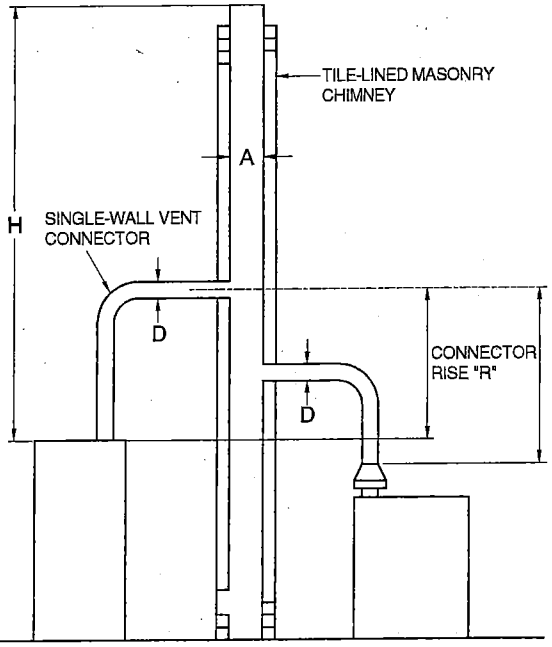

Table 504.3(4) is used when sizing single-wall metal vent connectors attached to a tile-lined masonry chimney.

Note: "A" is the equivalent cross-sectional area of the tile liner.

Note: Each appliance may be either Category I draft hood equipped or fan-assisted type.

FIGURE B-9
MASONRY CHIMNEY SERVING TWO OR MORE APPLIANCES WITH SINGLE-WALL METAL VENT CONNECTORS

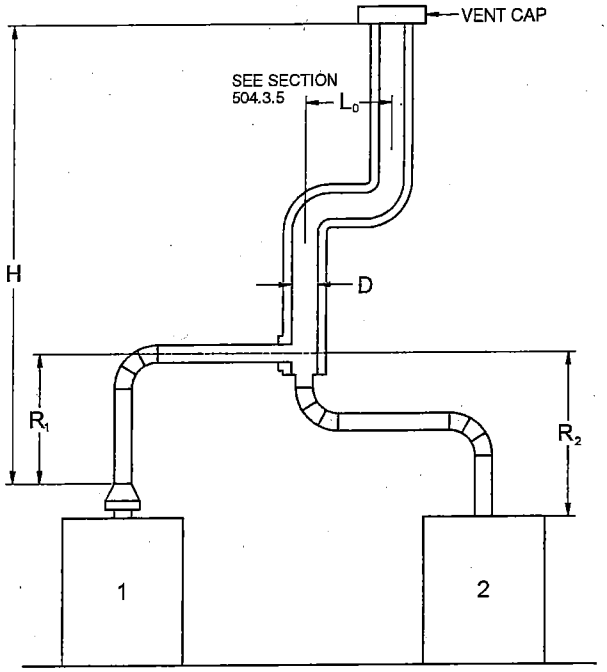

Asbestos cement Type B or single-wall metal pipe vent serving two or more draft-hood-equipped appliances [see Table 504.3(5)].

FIGURE B-10
ASBESTOS CEMENT TYPE B OR SINGLE-WALL METAL VENT SYSTEM SERVING TWO OR MORE DRAFT-HOOD-EQUIPPED APPLIANCES

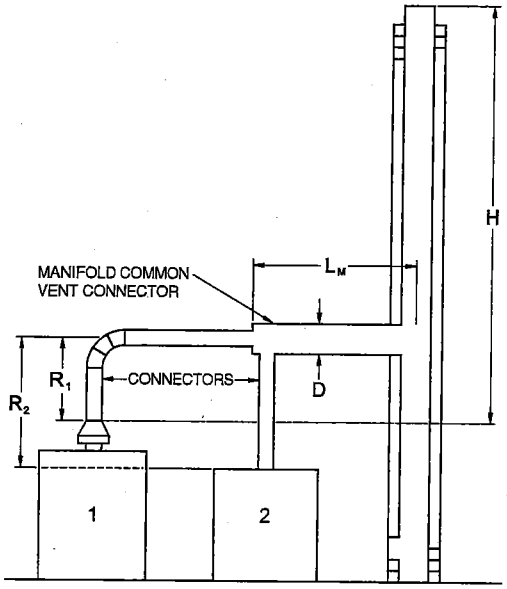

Example: Manifolded Common Vent Connector L_M shall be no greater than 18 times the common vent connector manifold inside diameter; i.e., a 4-inch (102 mm) inside diameter common vent connector manifold shall not exceed 72 inches (1829 mm) in length (see Section 504.3.4).

Note: This is an illustration of a typical manifolded vent connector. Different appliance, vent connector, or common vent types are possible. Consult Section 502.3.

FIGURE B-11
USE OF MANIFOLD COMMON VENT CONNECTOR

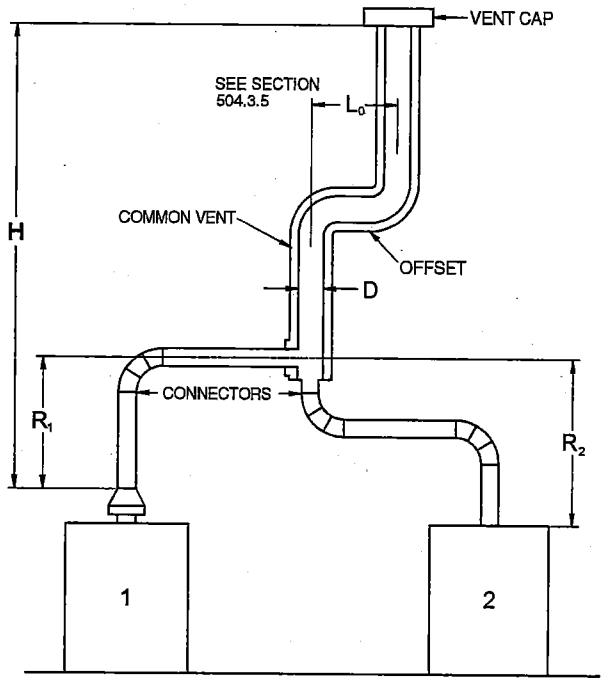

Example: Offset Common Vent

Note: This is an illustration of a typical offset vent. Different appliance, vent connector, or vent types are possible. Consult Sections 504.2 and 504.3.

FIGURE B-12
USE OF OFFSET COMMON VENT

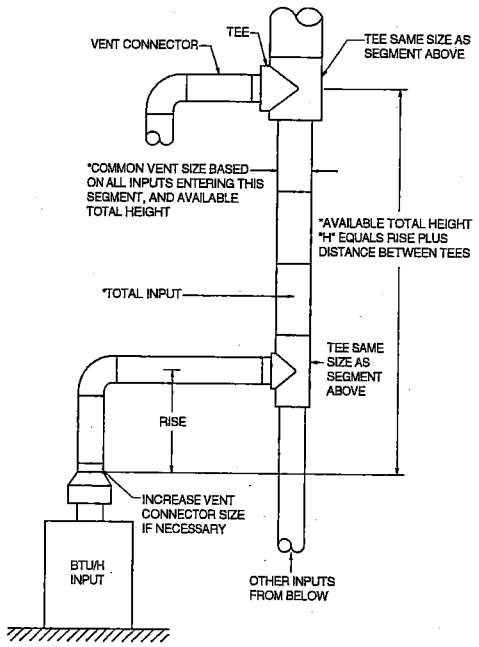

Vent connector size depends on:
- Input
- Rise
- Available total height "H"
- Table 504.3(1) connectors

Common vent size depends on:
- Combined inputs
- Available total height "H"
- Table 504.3(1) common vent

FIGURE B-13
MULTISTORY GAS VENT DESIGN PROCEDURE FOR EACH SEGMENT OF SYSTEM

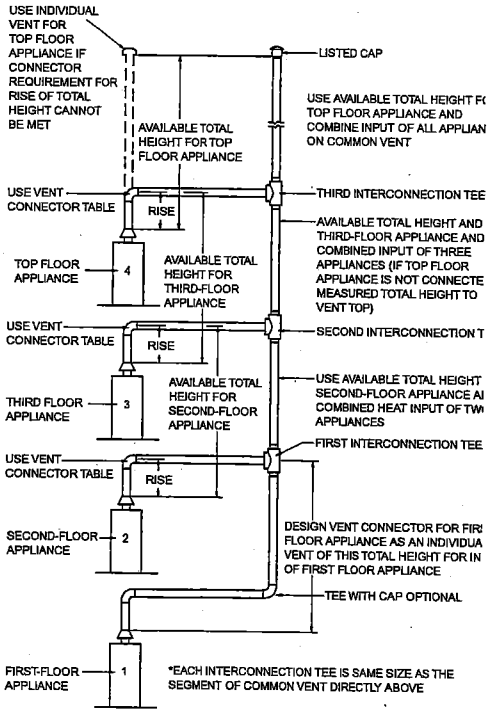

Principles of design of multistory vents using vent connector and common vent design tables (see Sections 504.3.11 through 504.3.17).

FIGURE B-14
MULTISTORY VENT SYSTEMS

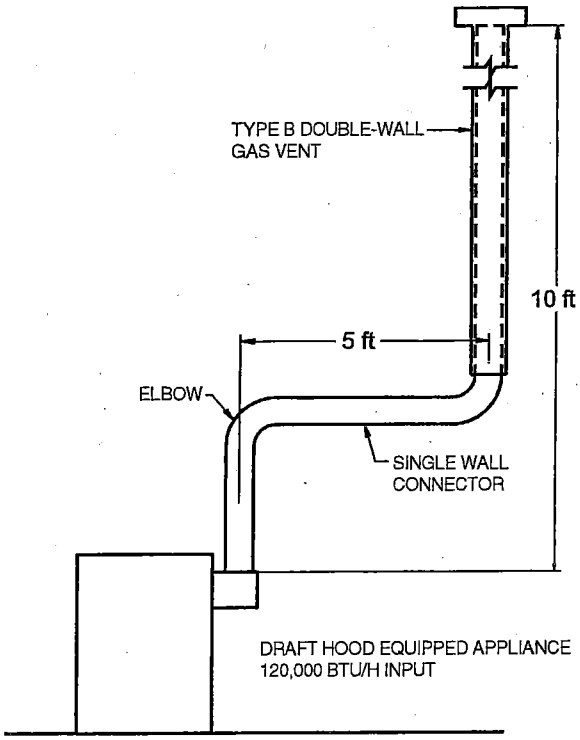

For SI: 1 foot = 304.8 mm, 1 British thermal unit per hour = 0.2931 W.

FIGURE B-15 (EXAMPLE 1)
SINGLE DRAFT-HOOD-EQUIPPED APPLIANCE

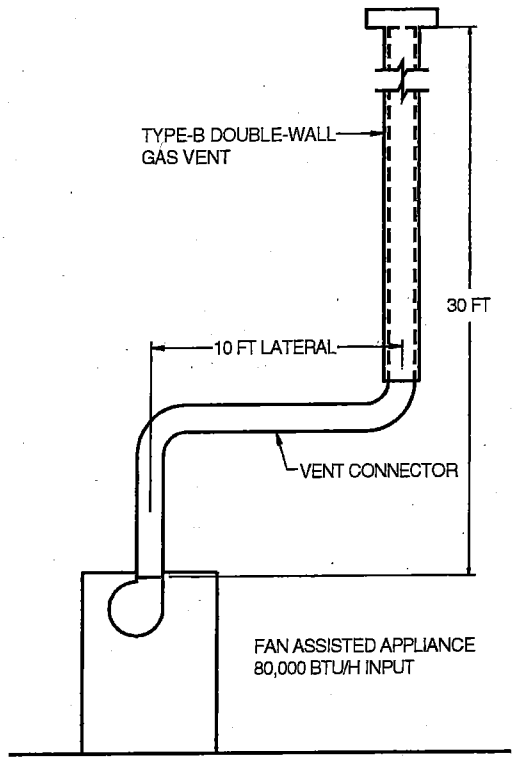

For SI: 1 foot = 304.8 mm, 1 British thermal unit per hour = 0.2931 W.

FIGURE B-16 (EXAMPLE 2)
SINGLE FAN-ASSISTED APPLIANCE

EXAMPLES USING COMMON VENTING TABLES

Example 4: Common venting two draft-hood-equipped appliances.

A 35,000 Btu per hour water heater is to be common vented with a 150,000 Btu per hour furnace using a common vent with a total height of 30 feet. The connector rise is 2 feet for the water heater with a horizontal length of 4 feet. The connector rise for the furnace is 3 feet with a horizontal length of 8 feet. Assume single-wall metal connectors will be used with Type B vent. What size connectors and combined vent should be used in this installation?

Solution:

Table 504.3(2) should be used to size single-wall metal vent connectors attached to Type B vertical vents. In the vent connector capacity portion of Table 504.3(2), find the row associated with a 30-foot vent height. For a 2-foot rise on the vent connector for the water heater, read the shaded columns for draft-hood-equipped appliances to find that a 3-inch-diameter vent connector has a capacity of 37,000 Btu per hour. Therefore, a 3-inch single-wall metal vent connector may be used with the water heater. For a draft-hood-equipped furnace with a 3-foot rise, read across the appropriate row to find that a 5-inch-diameter vent connector has a maximum capacity of 120,000 Btu per hour (which is too small for the furnace) and a 6-inch-diameter vent connector has a maximum vent capacity of 172,000 Btu per hour. Therefore, a 6-inch-diameter vent connector should be used with the 150,000 Btu per hour furnace. Since both vent connector horizontal lengths are less than the maximum lengths listed in Section 504.3.2, the table values may be used without adjustments.

In the common vent capacity portion of Table 504.3(2), find the row associated with a 30-foot vent height and read over to the NAT + NAT portion of the 6-inch-diameter column to find a maximum combined capacity of 257,000 Btu per hour. Since the two appliances total only 185,000 Btu per hour, a 6-inch common vent may be used.

Example 5a: Common venting a draft-hood-equipped water heater with a fan-assisted furnace into a Type B vent.

In this case, a 35,000 Btu per hour input draft-hood-equipped water heater with a 4-inch-diameter draft hood outlet, 2 feet of connector rise, and 4 feet of horizontal length is to be common vented with a 100,000 Btu per hour fan-assisted furnace with a 4-inch-diameter flue collar, 3 feet of connector rise, and 6 feet of horizontal length. The common vent consists of a 30-foot height of Type B vent. What are the recommended vent diameters for each connector and the common vent? The installer would like to use a single-wall metal vent connector.

Solution: [Table 504.3(2)].

Water Heater Vent Connector Diameter. Since the water heater vent connector horizontal length of 4 feet is less than the maximum value listed in Section 504.3.2, the venting

table values may be used without adjustments. Using the Vent Connector Capacity portion of Table 504.3(2), read down the Total Vent Height (*H*) column to 30 feet and read across the 2-foot Connector Rise (*R*) row to the first Btu per hour rating in the NAT Max column that is equal to or greater than the water heater input rating. The table shows that a 3-inch vent connector has a maximum input rating of 37,000 Btu per hour. Although this is greater than the water heater input rating, a 3-inch vent connector is prohibited by Section 504.3.21. A 4-inch vent connector has a maximum input rating of 67,000 Btu per hour and is equal to the draft hood outlet diameter. A 4-inch vent connector is selected. Since the water heater is equipped with a draft hood, there are no minimum input rating restrictions.

Furnace Vent Connector Diameter. Using the Vent Connector Capacity portion of Table 504.3(2), read down the Total Vent Height (*H*) column to 30 feet and across the 3-foot Connector Rise (*R*) row. Since the furnace has a fan-assisted combustion system, find the first FAN Max column with a Btu per hour rating greater than the furnace input rating. The 4-inch vent connector has a maximum input rating of 119,000 Btu per hour and a minimum input rating of 85,000 Btu per hour. The 100,000 Btu per hour furnace in this example falls within this range, so a 4-inch connector is adequate. Since the furnace vent connector horizontal length of 6 feet does not exceed the maximum value listed in Section 504.3.2, the venting table values may be used without adjustment. If the furnace had an input rating of 80,000 Btu per hour, then a Type B vent connector [see Table 504.3(1)] would be needed in order to meet the minimum capacity limit.

Common Vent Diameter. The total input to the common vent is 135,000 Btu per hour. Using the Common Vent Capacity portion of Table 504.3(2), read down the Total Vent Height (*H*) column to 30 feet and across this row to find the smallest vent diameter in the FAN + NAT column that has a Btu per hour rating equal to or greater than 135,000 Btu per hour. The 4-inch common vent has a capacity of 132,000 Btu per hour and the 5-inch common vent has a capacity of 202,000 Btu per hour. Therefore, the 5-inch common vent should be used in this example.

Summary. In this example, the installer may use a 4-inch-diameter, single-wall metal vent connector for the water heater and a 4-inch-diameter, single-wall metal vent connector for the furnace. The common vent should be a 5-inch-diameter Type B vent.

Example 5b: Common venting into a masonry chimney.

In this case, the water heater and fan-assisted furnace of Example 5a are to be common vented into a clay tile-lined masonry chimney with a 30-foot height. The chimney is not exposed to the outdoors below the roof line. The internal dimensions of the clay tile liner are nominally 8 inches by 12 inches. Assuming the same vent connector heights, laterals, and materials found in Example 5a, what are the recommended vent connector diameters, and is this an acceptable installation?

Solution:

Table 504.3(4) is used to size common venting installations involving single-wall connectors into masonry chimneys.

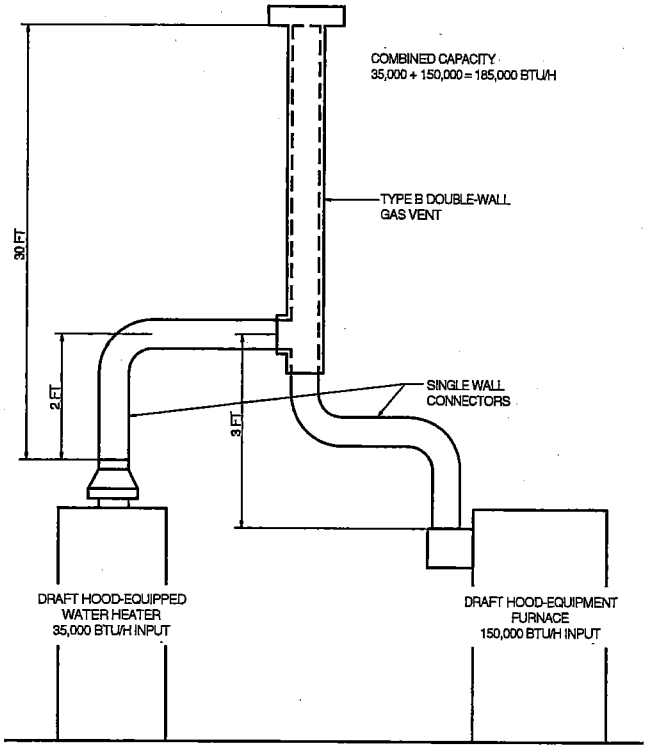

FIGURE B-17 (EXAMPLE 4)
COMMON VENTING TWO DRAFT-HOOD-EQUIPPED APPLIANCES

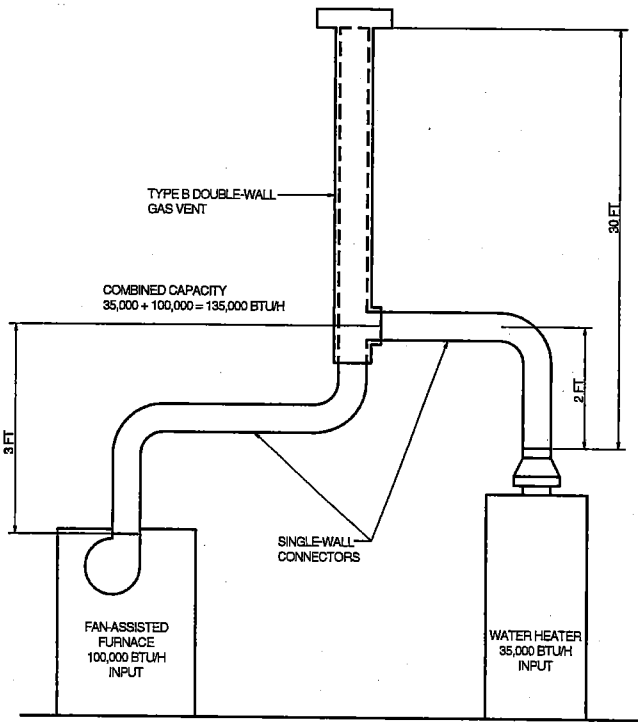

FIGURE B-18 (EXAMPLE 5A)
COMMON VENTING A DRAFT HOOD WITH A FAN-ASSISTED FURNACE INTO A TYPE B DOUBLE-WALL COMMON VENT

Water Heater Vent Connector Diameter. Using Table 504.3(4), Vent Connector Capacity, read down the Total Vent Height (*H*) column to 30 feet, and read across the 2-foot Connector Rise (*R*) row to the first Btu per hour rating in the NAT Max column that is equal to or greater than the water heater input rating. The table shows that a 3-inch vent connector has a maximum input of only 31,000 Btu per hour while a 4-inch vent connector has a maximum input of 57,000 Btu per hour. A 4-inch vent connector must therefore be used.

Furnace Vent Connector Diameter. Using the Vent Connector Capacity portion of Table 504.3(4), read down the Total Vent Height (*H*) column to 30 feet and across the 3-foot Connector Rise (*R*) row. Since the furnace has a fan-assisted combustion system, find the first FAN Max column with a Btu per hour rating greater than the furnace input rating. The 4-inch vent connector has a maximum input rating of 127,000 Btu per hour and a minimum input rating of 95,000 Btu per hour. The 100,000 Btu per hour furnace in this example falls within this range, so a 4-inch connector is adequate.

Masonry Chimney. From Table B-1, the equivalent area for a nominal liner size of 8 inches by 12 inches is 63.6 square inches. Using Table 504.3(4), Common Vent Capacity, read down the FAN + NAT column under the Minimum Internal Area of Chimney value of 63 to the row for 30-foot height to find a capacity value of 739,000 Btu per hour. The combined input rating of the furnace and water heater, 135,000 Btu per hour, is less than the table value, so this is an acceptable installation.

Section 504.3.17 requires the common vent area to be no greater than seven times the smallest listed appliance categorized vent area, flue collar area, or draft hood outlet area. Both appliances in this installation have 4-inch-diameter outlets. From Table B-1, the equivalent area for an inside diameter of 4 inches is 12.2 square inches. Seven times 12.2 equals 85.4, which is greater than 63.6, so this configuration is acceptable.

Example 5c: Common venting into an exterior masonry chimney.

In this case, the water heater and fan-assisted furnace of Examples 5a and 5b are to be common vented into an exterior masonry chimney. The chimney height, clay tile liner dimensions, and vent connector heights and laterals are the same as in Example 5b. This system is being installed in Charlotte, North Carolina. Does this exterior masonry chimney need to be relined? If so, what corrugated metallic liner size is recommended? What vent connector diameters are recommended?

Solution:

According to Section 504.3.20, Type B vent connectors are required to be used with exterior masonry chimneys. Use Tables 504.3(7a), (7b) to size FAN+NAT common venting installations involving Type-B double wall connectors into exterior masonry chimneys.

The local 99-percent winter design temperature needed to use Table 504.3(7b) can be found in the ASHRAE *Handbook of Fundamentals*. For Charlotte, North Carolina, this design temperature is 19°F.

Chimney Liner Requirement. As in Example 5b, use the 63 square inch Internal Area columns for this size clay tile liner. Read down the 63 square inch column of Table 504.3(7a) to the 30-foot height row to find that the combined appliance maximum input is 747,000 Btu per hour. The combined input rating of the appliances in this installation, 135,000 Btu per hour, is less than the maximum value, so this criterion is satisfied. Table 504.3(7b), at a 19°F design temperature, and at the same vent height and internal area used above, shows that the minimum allowable input rating of a space-heating appliance is 470,000 Btu per hour. The furnace input rating of 100,000 Btu per hour is less than this minimum value. So this criterion is not satisfied, and an alternative venting design needs to be used, such as a Type B vent shown in Example 5a or a listed chimney liner system shown in the remainder of the example.

According to Section 504.3.19, Table 504.3(1) or 504.3(2) is used for sizing corrugated metallic liners in masonry chimneys, with the maximum common vent capacities reduced by 20 percent. This example will be continued assuming Type B vent connectors.

Water Heater Vent Connector Diameter. Using Table 504.3(1), Vent Connector Capacity, read down the Total Vent Height (*H*) column to 30 feet, and read across the 2-foot Connector Rise (*R*) row to the first Btu/h rating in the NAT Max column that is equal to or greater than the water heater input rating. The table shows that a 3-inch vent connector has a maximum capacity of 39,000 Btu/h. Although this rating is greater than the water heater input rating, a 3-inch vent connector is prohibited by Section 504.3.21. A 4-inch vent connector has a maximum input rating of 70,000 Btu/h and is equal to the draft hood outlet diameter. A 4-inch vent connector is selected.

Furnace Vent Connector Diameter. Using Table 504.3(1), Vent Connector Capacity, read down the Vent Height (*H*) column to 30 feet, and read across the 3-foot Connector Rise (*R*) row to the first Btu per hour rating in the FAN Max column that is equal to or greater than the furnace input rating. The 100,000 Btu per hour furnace in this example falls within this range, so a 4-inch connector is adequate.

Chimney Liner Diameter. The total input to the common vent is 135,000 Btu per hour. Using the Common Vent Capacity Portion of Table 504.3(1), read down the Vent Height (*H*) column to 30 feet and across this row to find the smallest vent diameter in the FAN+NAT column that has a Btu per hour rating greater than 135,000 Btu per hour. The 4-inch common vent has a capacity of 138,000 Btu per hour. Reducing the maximum capacity by 20 percent (Section 504.3.19) results in a maximum capacity for a 4-inch corrugated liner of 110,000 Btu per hour, less than the total

input of 135,000 Btu per hour. So a larger liner is needed. The 5-inch common vent capacity listed in Table 504.3(1) is 210,000 Btu per hour, and after reducing by 20 percent is 168,000 Btu per hour. Therefore, a 5-inch corrugated metal liner should be used in this example.

Single-Wall Connectors. Once it has been established that relining the chimney is necessary, Type B double-wall vent connectors are not specifically required. This example could be redone using Table 504.3(2) for single-wall vent connectors. For this case, the vent connector and liner diameters would be the same as found above with Type B double-wall connectors.

TABLE B-1
MASONRY CHIMNEY LINER DIMENSIONS WITH CIRCULAR EQUIVALENTS[a]

NOMINAL LINER SIZE (inches)	INSIDE DIMENSIONS OF LINER (inches)	INSIDE DIAMETER OR EQUIVALENT DIAMETER (inches)	EQUIVALENT AREA (square inches)
4 × 8	$2^1/_2 \times 6^1/_2$	4	12.2
		5	19.6
		6	28.3
		7	38.3
8 × 8	$6^3/_4 \times 6^3/_4$	7.4	42.7
		8	50.3
8 × 12	$6^1/_2 \times 10^1/_2$	9	63.6
		10	78.5
12 × 12	$9^3/_4 \times 9^3/_4$	10.4	83.3
		11	95
12 × 16	$9^1/_2 \times 13^1/_2$	11.8	107.5
		12	113.0
		14	153.9
16 × 16	$13^1/_4 \times 13^1/_4$	14.5	162.9
		15	176.7
16 × 20	13 × 17	16.2	206.1
		18	254.4
20 × 20	$16^3/_4 \times 16^3/_4$	18.2	260.2
		20	314.1
20 × 24	$16^1/_2 \times 20^1/_2$	20.1	314.2
		22 ×	380.1
24 × 24	$20^1/_4 \times 20^1/_4$	22.1	380.1
		24	452.3
24 × 28	$20^1/_4 \times 20^1/_4$	24.1	456.2
28 × 28	$24^1/_4 \times 24^1/_4$	26.4	543.3
		27	572.5
30 × 30	$25^1/_2 \times 25^1/_2$	27.9	607
		30	706.8
30 × 36	$25^1/_2 \times 31^1/_2$	30.9	749.9
		33	855.3
36 × 36	$31^1/_2 \times 31^1/_2$	34.4	929.4
		36	1017.9

For SI: 1 inch = 25.4 mm, 1 square inch = 645.16 m^2.

a. Where liner sizes differ dimensionally from those shown in Table B-1, equivalent diameters may be determined from published tables for square and rectangular ducts of equivalent carrying capacity or by other engineering methods.

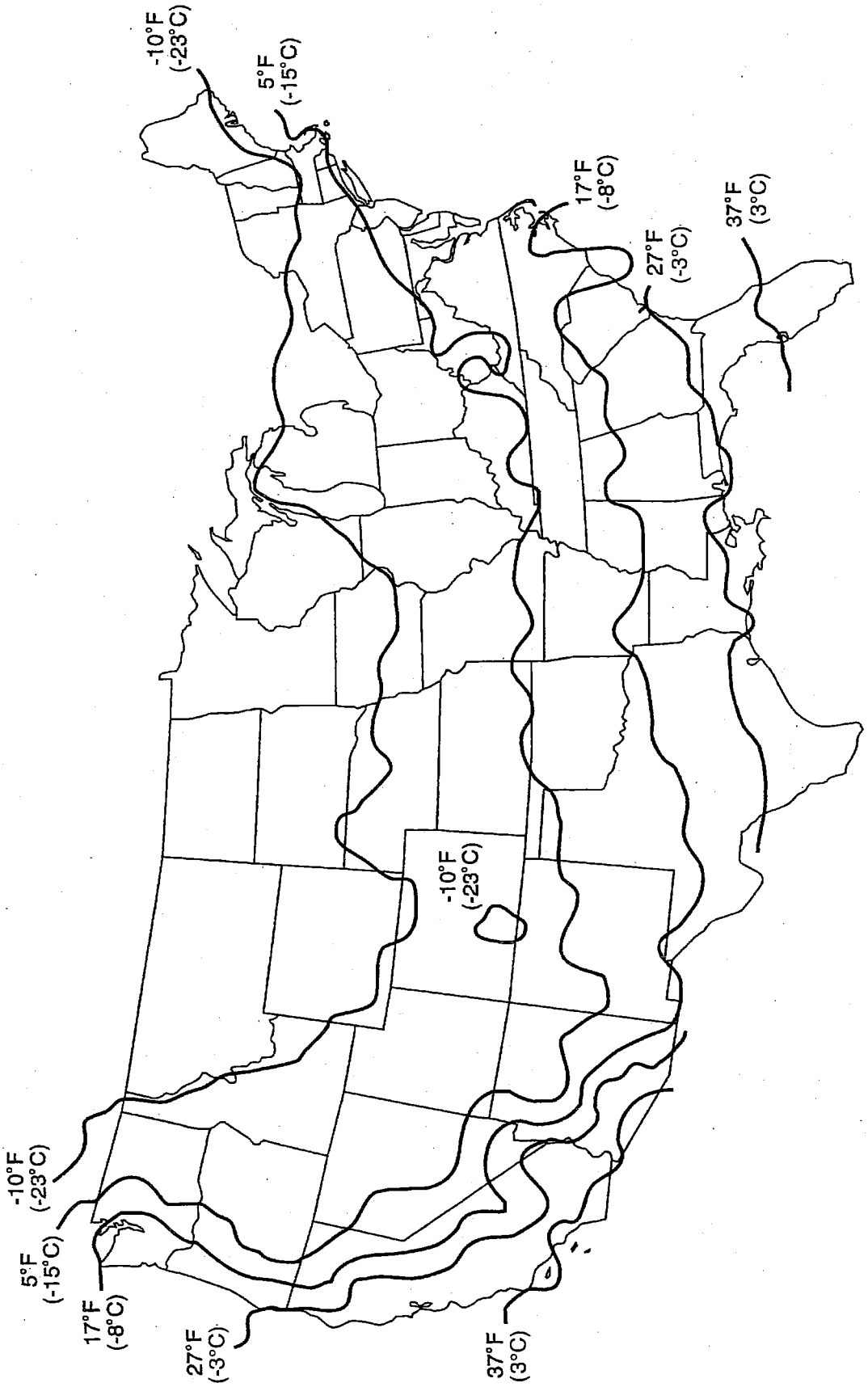
-10°F
(-23°C)
5°F
(-15°C)
17°F
(-8°C)
27°F
(-3°C)
37°F
(3°C)
-10°F
(-23°C)
5°F
(-15°C)
17°F
(-8°C)
27°F
(-3°C)
37°F
(3°C)
-10°F
(-23°C)

FIGURE B-19

CALIFORNIA RESIDENTIAL CODE – MATRIX ADOPTION TABLE
APPENDIX C – EXIT TERMINALS OF MECHANICAL DRAFT AND DIRECT-VENT VENTING SYSTEMS

(Matrix Adoption Tables are non-regulatory, intended only as an aid to the user.
See Chapter 1 for state agency authority and building applications.)

Adopting agency	BSC	SFM	HCD			DSA		OSHPD				BSCC	DHS	AGR	DWR	CEC	CA	SL	SLC
			1	2	1/AC	AC	SS	1	2	3	4								
Adopt entire chapter																			
Adopt entire chapter as amended (amended sections listed below)																			
Adopt only those sections that are listed below																			
[California Code of Regulations, Title 19, Division 1]																			
Chapter / Section																			

* The California Code of Regulations (CCR), Title 19, Division 1 provisions that are found in the *California Fire Code* are a reprint from the current CCR, Title 19, Division 1 text for the code user's convenience only. The scope, applicability and appeals procedures of CCR, Title 19, Division I remain the same.

APPENDIX C

EXIT TERMINALS OF MECHANICAL DRAFT AND DIRECT-VENT VENTING SYSTEMS

(This appendix is informative and is not part of the code. This appendix is an excerpt from the 2012 *International Fuel Gas Code,* coordinated with the section numbering of the *International Residential Code.*)

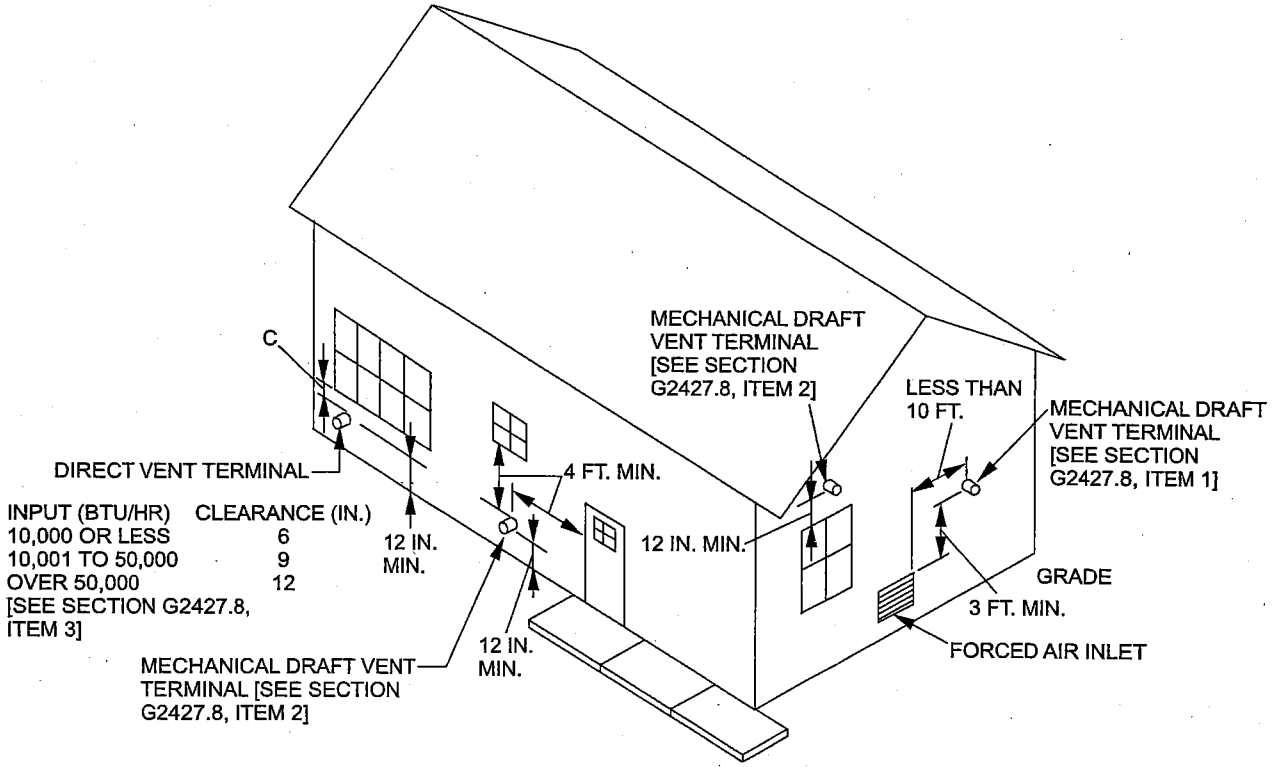

For SI: 1 inch = 25.4 mm, 1 foot = 304.8 mm, 1 British thermal unit per hour = 0.2931 W.

CALIFORNIA RESIDENTIAL CODE – MATRIX ADOPTION TABLE APPENDIX D – RECOMMENDED PROCEDURE FOR SAFETY INSPECTION OF AN EXISTING APPLIANCE INSTALLATION

(Matrix Adoption Tables are non-regulatory, intended only as an aid to the user. See Chapter 1 for state agency authority and building applications.)

Adopting agency	BSC	SFM	HCD			DSA		OSHPD				BSCC	DHS	AGR	DWR	CEC	CA	SL	SLC
			1	2	1/AC	AC	SS	1	2	3	4								
Adopt entire chapter																			
Adopt entire chapter as amended (amended sections listed below)																			
Adopt only those sections that are listed below																			
[California Code of Regulations, Title 19, Division 1]																			
Chapter / Section																			

* The California Code of Regulations (CCR), Title 19, Division 1 provisions that are found in the *California Fire Code* are a reprint from the current CCR, Title 19, Division 1 text for the code user's convenience only. The scope, applicability and appeals procedures of CCR, Title 19, Division I remain the same.

APPENDIX D

RECOMMENDED PROCEDURE FOR SAFETY INSPECTION OF AN EXISTING APPLIANCE INSTALLATION

(This appendix is informative and is not part of the code. This appendix is an excerpt from the 2012 *International Fuel Gas Code,* coordinated with the section numbering of the *International Residential Code.*)

The following procedure is intended as a guide to aid in determining that an appliance is properly installed and is in a safe condition for continuing use.

This procedure is intended for cental furnace and boiler installations and may not be applicable to all installations.

(a) This procedure should be performed prior to any attempt at modification of the appliance or of the installation.

(b) If it is determined that there is a condition that could result in unsafe operation, shut off the appliance and advise the owner of the unsafe condition. The following steps should be followed in making the safety inspection:

1 Conduct a check for gas leakage. (See Section 406.6)

2. Visually inspect the venting system for proper size and horizontal pitch and determine there is no blockage or restriction, leakage, corrosion and other deficiencies that could cause an unsafe condition.

3 Shut off all gas to the appliance and shut off any other fuel-gas-burning appliance within the same room. **Use the shutoff valve in the supply line to each appliance.**

4. Inspect burners and crossovers for blockage and corrosion.

5. **Furnace installations:** Inspect the heat exchanger for cracks, openings or excessive corrosion.

6. **Boiler installations:** Inspect for evidence of water or combustion product leaks.

7. Close all building doors and windows and all doors between the space in which the appliance is located and other spaces of the building that can be closed. Turn on any clothes dryers. Turn on any exhaust fans, such as range hoods and bathroom exhausts, so they will operate at maximum speed. Do not operate a summer exhaust fan. Close fireplace dampers. If, after completing Steps 8 through 13, it is believed sufficient combustion air is not available, refer to Section 304 of this code.

8. Place the appliance being inspected in operation. **Follow the lighting instructions.** Adjust the thermostat so appliance will operate continuously.

9. Determine that the pilot, where provided, is burning properly and that the main burner ignition is satisfactory by interrupting and reestablishing the electrical supply to the appliance in any convenient manner. If the appliance is equipped with a continuous pilot, test all pilot safety devices to determine if they

are operating properly by extinguishing the pilot when the main burner is off and determining, after 3 minutes, that the main burner gas does not flow upon a call for heat. If the appliance is not provided with a pilot, test for proper operation of the ignition system in accordance with the appliance manufacturer's lighting and operating instructions.

10. Visually determine that the main burner gas is burning properly (i.e., no floating, lifting or flashback). Adjust the primary air shutters as required. If the appliance is equipped with high and low flame controlling or flame modulation, check for proper main burner operation at low flame.

11. Test for spillage at the draft hood relief opening after 5 minutes of main burner operation. Use the flame of a match or candle or smoke.

12. Turn on all other fuel-gas-burning appliances within the same room so they will operate at their full inputs. **Follow lighting instructions for each appliance.**

13. Repeat Steps 10 and 11 on the appliance being inspected.

14. Return doors, windows, exhaust fans, fireplace dampers and any other fuel-gas-burning appliance to their previous conditions of use.

15. **Furnace installations:** Check both the limit control and the fan control for proper operation. Limit control operation can be checked by blocking the circulating air inlet or temporarily disconnecting the electrical supply to the blower motor and determining that the limit control acts to shut off the main burner gas.

16. **Boiler installations:** Verify that the water pumps are in operating condition. Test low water cutoffs, automatic feed controls, pressure and temperature limit controls and relief valves in accordance with the manufacturer's recommendations to determine that they are in operating condition.

CALIFORNIA RESIDENTIAL CODE – MATRIX ADOPTION TABLE
APPENDIX E – MANUFACTURED HOUSING USED AS DWELLINGS

(Matrix Adoption Tables are non-regulatory, intended only as an aid to the user.
See Chapter 1 for state agency authority and building applications.)

Adopting agency	BSC	SFM	HCD			DSA		OSHPD				BSCC	DHS	AGR	DWR	CEC	CA	SL	SLC
			1	2	1/AC	AC	SS	1	2	3	4								
Adopt entire chapter																			
Adopt entire chapter as amended (amended sections listed below)																			
Adopt only those sections that are listed below																			
[California Code of Regulations, Title 19, Division 1]																			
Chapter / Section																			

* The California Code of Regulations (CCR), Title 19, Division 1 provisions that are found in the *California Fire Code* are a reprint from the current CCR, Title 19, Division 1 text for the code user's convenience only. The scope, applicability and appeals procedures of CCR, Title 19, Division I remain the same.

APPENDIX E

MANUFACTURED HOUSING USED AS DWELLINGS

(Note: This appendix is not adopted. See California Code of Regulations, Title 25, Chapters 2 and 3.)

SECTION AE101
SCOPE

AE101.1 General. These provisions shall be applicable only to a manufactured home used as a single dwelling unit installed on privately owned (nonrental) lots and shall apply to the following:

1. Construction, alteration and repair of any foundation system which is necessary to provide for the installation of a manufactured home unit.
2. Construction, installation, addition, alteration, repair or maintenance of the building service equipment which is necessary for connecting manufactured homes to water, fuel, or power supplies and sewage systems.
3. Alterations, additions or repairs to existing manufactured homes. The construction, alteration, moving, demolition, repair and use of accessory buildings and structures, and their building service equipment, shall comply with the requirements of the codes adopted by this jurisdiction.

These provisions shall not be applicable to the design and construction of manufactured homes and shall not be deemed to authorize either modifications or additions to manufactured homes where otherwise prohibited.

Exception: In addition to these provisions, new and replacement manufactured homes to be located in flood hazard areas as established in Table R301.2(1) of the *California Residential Code* shall meet the applicable requirements of Section R322 of the *California Residential Code.*

SECTION AE102
APPLICATION TO EXISTING MANUFACTURED HOMES AND BUILDING SERVICE EQUIPMENT

AE102.1 General. Manufactured homes and their building service equipment to which additions, alterations or repairs are made shall comply with all the requirements of these provisions for new facilities, except as specifically provided in this section.

AE102.2 Additions, alterations or repairs. Additions made to a manufactured home shall conform to one of the following:

1. Be certified under the National Manufactured Housing Construction and Safety Standards Act of 1974 (42 U.S.C. Section 5401, et seq.).
2. Be designed and constructed to comply with the applicable provisions of the National Manufactured Housing Construction and Safety Standards Act of 1974 (42 U.S.C. Section 5401, et seq.).
3. Be designed and constructed in compliance with the code adopted by this jurisdiction.

Additions shall be structurally separated from the manufactured home.

Exception: A structural separation need not be provided when structural calculations are provided to justify the omission of such separation.

Alterations or repairs may be made to any manufactured home or to its building service equipment without requiring the existing manufactured home or its building service equipment to comply with all the requirements of

these provisions, provided the alteration or repair conforms to that required for new construction, and provided further that no hazard to life, health or safety will be created by such additions, alterations or repairs.

Alterations or repairs to an existing manufactured home, which are nonstructural and do not adversely affect any structural member or any part of the building or structure having required fire protection, may be made with materials equivalent to those of which the manufactured home structure is constructed, subject to approval by the building official.

Exception: The installation or replacement of glass shall be required for new installations.

Minor additions, alterations and repairs to existing building service equipment installations may be made in accordance with the codes in effect at the time the original installation was made, subject to the approval of the building official, and provided such additions, alterations and repairs will not cause the existing building service equipment to become unsafe, insanitary or overloaded.

AE102.3 Existing installations. Building service equipment lawfully in existence at the time of the adoption of the applicable codes may have their use, maintenance or repair continued if the use, maintenance or repair is in accordance with the original design and no hazard to life, health or property has been created by such building service equipment.

AE102.4 Existing occupancy. Manufactured homes, which are in existence at the time of the adoption of these provisions, may have their existing use or occupancy continued if such use or occupancy was legal at the time of the adoption of these provisions, provided such continued use is not dangerous to life, health and safety.

The use or occupancy of any existing manufactured home shall not be changed unless evidence satisfactory to the building official is provided to show compliance with all applicable provisions of the codes adopted by this jurisdiction. Upon any change in use or occupancy, the manufactured home shall cease to be classified as such within the intent of these provisions.

AE102.5 Maintenance. All manufactured homes and their building service equipment, existing and new, and all parts thereof, shall be maintained in a safe and sanitary condition. All devices or safeguards which are required by applicable codes or by the Manufactured Home Standards shall be maintained in conformance to the code or standard under which it was installed. The owner or the owner's designated agent shall be responsible for the maintenance of manufactured homes, accessory buildings, structures and their building service equipment. To determine compliance with this section, the building official may cause any manufactured home, accessory building or structure to be reinspected.

AE102.6 Relocation. Manufactured homes which are to be relocated within this jurisdiction shall comply with these provisions.

SECTION AE201
DEFINITIONS

AE201.1 General. For the purpose of these provisions, certain abbreviations, terms, phrases, words and their derivatives shall be construed as defined or specified herein.

ACCESSORY BUILDING. Any building or structure, or portion thereto, located on the same property as a manufactured home which does not qualify as a manufactured home as defined herein.

BUILDING SERVICE EQUIPMENT. Refers to the plumbing, mechanical and electrical equipment, including piping, wiring, fixtures and other accessories which provide sanitation, lighting, heating, ventilation, cooling, fire protection and facilities essential for the habitable occupancy of a manufactured home or accessory building or structure for its designated use and occupancy.

MANUFACTURED HOME. A structure transportable in one or more sections which, in the traveling mode, is 8 body feet (2438 body mm) or more in width or 40 body feet (12 192 body mm) or more in length or, when erected on site, is 320 or more square feet (30 m^2), and which is built on a permanent chassis and designed to be used as a dwelling with or without a permanent foundation when connected to the required utilities, and includes the plumbing, heating, air-conditioning and electrical systems contained therein; except that such term shall include any structure which meets all the requirements of this paragraph, except the size requirements and with respect to which the manufacturer voluntarily files a certification required by the Secretary of the U.S. Department of Housing and Urban Development (HUD) and complies with the standards established under this title.

For mobile homes built prior to June 15, 1976, a label certifying compliance with the *Standard for Mobile Homes*, NFPA 501, ANSI 119.1, in effect at the time of manufacture, is required. For the purpose of these provisions, a mobile home shall be considered a manufactured home.

MANUFACTURED HOME INSTALLATION. Construction which is required for the installation of a manufactured home, including the construction of the foundation system, required structural connections thereto and the installation of on-site water, gas, electrical and sewer systems and connections thereto which are necessary for the normal operation of the manufactured home.

MANUFACTURED HOME STANDARDS. The Manufactured Home Construction and Safety Standards as promulgated by the HUD.

PRIVATELY OWNED (NONRENTAL) LOT. A parcel of real estate outside of a manufactured home rental community (park) where the land and the manufactured home to be installed thereon are held in common ownership.

SECTION AE301
PERMITS

AE301.1 Initial installation. A manufactured home shall not be installed on a foundation system, reinstalled or altered without first obtaining a permit from the building official. A separate permit shall be required for each manufactured home installation. When approved by the building official, such permit may include accessory buildings and structures, and their building service equipment, when the accessory buildings or structures will be constructed in conjunction with the manufactured home installation.

AE301.2 Additions, alterations and repairs to a manufactured home. A permit shall be obtained to alter, remodel, repair or add accessory buildings or structures to a manufactured home subsequent to its initial installation. Permit issuance and fees therefor shall be in conformance to the codes applicable to the type of work involved.

An addition made to a manufactured home, as defined in these provisions, shall comply with these provisions.

AE301.3 Accessory buildings. Except as provided in Section AE301.1, permits shall be required for all accessory buildings and structures, and their building service equipment. Permit issuance and fees therefor shall be in conformance the codes applicable to the types of work involved.

AE301.4 Exempted work. A permit shall not be required for the types of work specifically exempted by the applicable codes. Exemption from the permit requirements of any of said codes shall not be deemed to grant authorization for any work to be done in violation of the provisions of said codes or any other laws or ordinances of this jurisdiction.

SECTION AE302
APPLICATION FOR PERMIT

AE302.1 Application. To obtain a manufactured home installation permit, the applicant shall first file an application, in writing, on a form furnished by the building official for that purpose. At the option of the building official, every such application shall:

1. Identify and describe the work to be covered by the permit for which application is made.
2. Describe the land on which the proposed work is to be done by legal description, street address or similar description that will readily identify and definitely locate the proposed building or work.
3. Indicate the use or occupancy for which the proposed work is intended.
4. Be accompanied by plans, diagrams, computations and specifications, and other data as required in Section AE302.2.
5. Be accompanied by a soil investigation when required by Section AE502.2.
6. State the valuation of any new building or structure; or any addition, remodeling or alteration to an existing building.
7. Be signed by permittee, or permittee's authorized agent, who may be required to submit evidence to indicate such authority.
8. Give such other data and information as may be required by the building official.

AE302.2 Plans and specifications. Plans, engineering calculations, diagrams and other data as required by the building official shall be submitted in not less than two sets with each application for a permit. The building official may require plans, computations and specifications to be prepared and designed by an engineer or architect licensed by the state to practice as such.

Where no unusual site conditions exist, the building official may accept approved standard foundation plans and details in conjunction with the manufacturer's approved installation instructions without requiring the submittal of engineering calculations.

AE302.3 Information on plans and specifications. Plans and specifications shall be drawn to scale on substantial paper or cloth, and shall be of sufficient clarity to indicate the location, nature and extent of the work proposed and shown in detail that it will conform to the provisions of these provisions and all relevant laws, ordinances, rules and regulations. The building official shall determine what information is required on plans and specifications to ensure compliance.

SECTION AE303
PERMITS ISSUANCE

AE303.1 Issuance. The application, plans and specifications, and other data filed by an applicant for permit shall be reviewed by the building official. Such plans may be reviewed by other departments of this jurisdiction to verify compliance with any applicable laws under their jurisdiction. If the building official finds that the work described in an application for a permit, and the plans, specifications and other data filed therewith, conform to the requirements of these provisions, and other data filed therewith conform to the requirements of these provisions and other pertinent codes, laws and ordinances, and that the fees specified in Section AE304 have been paid, the building official shall issue a permit therefor to the applicant.

When the building official issues the permit where plans are required, the building official shall endorse in writing or stamp the plans and specifications APPROVED. Such approved plans and specifications shall not be changed, modified or altered without authorization from the building official, and all work shall be done in accordance with the approved plans.

AE303.2 Retention of plans. One set of approved plans and specifications shall be returned to the applicant and shall be kept on the site of the building or work at all times during which the work authorized thereby is in progress. One set of approved plans, specifications and computations shall be retained by the building official until final approval of the work.

AE303.3 Validity of permit. The issuance of a permit or approval of plans and specifications shall not be construed to

be a permit for, or an approval of, any violation of any of the provisions of these provisions or other pertinent codes of any other ordinance of the jurisdiction. No permit presuming to give authority to violate or cancel these provisions shall be valid.

The issuance of a permit based on plans, specifications and other data shall not prevent the building official from thereafter requiring the correction of errors in said plans, specifications and other data, or from preventing building operations being carried on thereunder when in violation of these provisions or of any other ordinances of this jurisdiction.

AE303.4 Expiration. Every permit issued by the building official under these provisions shall expire by limitation and become null and void if the work authorized by such permit is not commenced within 180 days from the date of such permit, or if the work authorized by such permit is suspended or abandoned at any time after the work is commenced for a period of 180 days. Before such work can be recommenced, a new permit shall be first obtained, and the fee therefor shall be one-half the amount required for a new permit for such work, provided no changes have been made or will be made in the original plans and specifications for such work, and provided further that such suspension or abandonment has not exceeded one year. In order to renew action on a permit after expiration, the permittee shall pay a new full permit fee.

Any permittee holding an unexpired permit may apply for an extension of the time within which work may commence under that permit when the permittee is unable to commence work within the time required by this section for good and satisfactory reasons. The building official may extend the time for action by the permittee for a period not exceeding 180 days upon written request by the permittee showing that circumstances beyond the control of the permittee have prevented action from being taken. No permit shall be extended more than once.

AE303.5 Suspension or revocation. The building official may, in writing, suspend or revoke a permit issued under these provisions whenever the permit is issued in error or on the basis of incorrect information supplied, or in violation of any ordinance or regulation or any of these provisions.

SECTION AE304
FEES

AE304.1 Permit fees. The fee for each manufactured home installation permit shall be established by the building official.

When permit fees are to be based on the value or valuation of the work to be performed, the determination of value or valuation under these provisions shall be made by the building official. The value to be used shall be the total value of all work required for the manufactured home installation plus the total value of all work required for the construction of accessory buildings and structures for which the permit is issued, as well as all finish work, painting, roofing, electrical, plumbing, heating, air conditioning, elevators, fire-extinguishing systems and any other permanent equipment which is a part of the accessory building or structure. The value of the manufactured home itself shall not be included.

AE304.2 Plan review fees. When a plan or other data are required to be submitted by Section AE302.2, a plan review fee shall be paid at the time of submitting plans and specifications for review. Said plan review fee shall be as established by the building official. Where plans are incomplete or changed so as to require additional plan review, an additional plan review fee shall be charged at a rate as established by the building official.

AE304.3 Other provisions.

AE304.3.1 Expiration of plan review. Applications for which no permit is issued within 180 days following the date of application shall expire by limitation, and plans and other data submitted for review may thereafter be returned to the applicant or destroyed by the building official. The building official may extend the time for action by the applicant for a period not exceeding 180 days upon request by the applicant showing that circumstances beyond the control of the applicant have prevented action from being taken. No application shall be extended more than once. In order to renew action on an application after expiration, the applicant shall resubmit plans and pay a new plan review fee.

AE304.3.2 Investigation fees—work without a permit.

AE304.3.2.1 Investigation. Whenever any work for which a permit is required by these provisions has been commenced without first obtaining said permit, a special investigation shall be made before a permit may be issued for such work.

AE304.3.2.2 Fee. An investigation fee, in addition to the permit fee, shall be collected whether or not a permit is then or subsequently issued. The investigation fee shall be equal to the amount of the permit fee required. The minimum investigation fee shall be the same as the minimum fee established by the building official. The payment of such investigation fee shall not exempt any person from compliance with all other provisions of either these provisions or other pertinent codes or from any penalty prescribed by law.

AE304.3.3 Fee refunds.

AE304.3.3.1 Permit fee erroneously paid or collected. The building official may authorize the refunding of any fee paid hereunder which was erroneously paid or collected.

AE304.3.3.2 Permit fee paid when no work done. The building official may authorize the refunding of not more than 80 percent of the permit fee paid when no work has been done under a permit issued in accordance with these provisions.

AE304.3.3.3 Plan review fee. The building official may authorize the refunding of not more than 80 percent of the plan review fee paid when an application for a permit for which a plan review fee has been paid is withdrawn or canceled before any plan reviewing is done.

The building official shall not authorize the refunding of any fee paid, except upon written application by the original permittee not later than 180 days after the date of the fee payment.

SECTION AE305
INSPECTIONS

AE305.1 General. All construction or work for which a manufactured home installation permit is required shall be subject to inspection by the building official, and certain types of construction shall have continuous inspection by special inspectors as specified in Section AE306. A survey of the lot may be required by the building official to verify that the structure is located in accordance with the approved plans.

It shall be the duty of the permit applicant to cause the work to be accessible and exposed for inspection purposes. Neither the building official nor this jurisdiction shall be liable for expense entailed in the removal or replacement of any material required to allow inspection.

AE305.2 Inspection requests. It shall be the duty of the person doing the work authorized by a manufactured home installation permit to notify the building official that such work is ready for inspection. The building official may require that every request for inspection be filed at least one working day before such inspection is desired. Such request may be in writing or by telephone at the option of the building official.

It shall be the duty of the person requesting any inspections required, either by these provisions or other applicable codes, to provide access to and means for proper inspection of such work.

AE305.3 Inspection record card. Work requiring a manufactured home installation permit shall not be commenced until the permit holder or the permit holder's agent shall have posted an inspection record card in a conspicuous place on the premises and in such position as to allow the building official conveniently to make the required entries thereon regarding inspection of the work. This card shall be maintained in such position by the permit holder until final approval has been issued by the building official.

AE305.4 Approval required. Work shall not be done on any part of the manufactured home installation beyond the point indicated in each successive inspection without first obtaining the approval of the building official. Such approval shall be given only after an inspection has been made of each successive step in the construction as indicated by each of the inspections required in Section AE305.5. There shall be a final inspection and approval of the manufactured home installation, including connections to its building service equipment, when completed and ready for occupancy or use.

AE305.5 Required inspections.

AE305.5.1 Structural inspections for the manufactured home installation. Reinforcing steel or structural framework of any part of any manufactured home foundation system shall not be covered or concealed without first obtaining the approval of the building official. The building official, upon notification from the permit holder or the permit holder's agent, shall make the following inspections and shall either approve that portion of the construction as completed or shall notify the permit holder or the permit holder's agent wherein the same fails to comply with these provisions or other applicable codes:

1. Foundation inspection: To be made after excavations for footings are completed and any required reinforcing steel is in place. For concrete foundations, any required forms shall be in place prior to inspection. All materials for the foundation shall be on the job, except where concrete from a central mixing plant (commonly termed "transit mixed") is to be used, the concrete materials need not be on the job. Where the foundation is to be constructed of approved treated wood, additional framing inspections as required by the building official may be required.
2. Concrete slab or under-floor inspection: To be made after all in-slab or under-floor building service equipment, conduit, piping accessories and other ancillary equipment items are in place but before any concrete is poured or the manufactured home is installed.
3. Anchorage inspection: To be made after the manufactured home has been installed and permanently anchored.

AE305.5.2 Structural inspections for accessory building and structures. Inspections for accessory buildings and structures shall be made as set forth in this code.

AE305.5.3 Building service equipment inspections. All building service equipment which is required as a part of a manufactured home installation, including accessory buildings and structures authorized by the same permit, shall be inspected by the building official. Building service equipment shall be inspected and tested as required by the applicable codes. Such inspections and testing shall be limited to site construction and shall not include building service equipment which is a part of the manufactured home itself. No portion of any building service equipment intended to be concealed by any permanent portion of the construction shall be concealed until inspected and approved. Building service equipment shall not be connected to a water, fuel or power supply, or sewer system, until authorized by the building official.

AE305.5.4 Final inspection. When finish grading and the manufactured home installation, including the installation of all required building service equipment, is completed and the manufactured home is ready for occupancy, a final inspection shall be made.

AE305.6 Other inspections. In addition to the called inspections specified in Section AE305.5.4, the building official may make or require other inspections of any construction work to ascertain compliance with these provisions or other codes and laws which are enforced by the code enforcement agency.

SECTION AE306
SPECIAL INSPECTIONS

AE306.1 General. In addition to the inspections required by Section AE305, the building official may require the owner to employ a special inspector during construction of specific types of work as described in this code.

SECTION AE307
UTILITY SERVICE

AE307.1 General. Utility service shall not be provided to any building service equipment which is regulated by these provisions or other applicable codes, and for which a manufactured home installation permit is required by these provisions, until approved by the building official.

SECTION AE401
OCCUPANCY CLASSIFICATION

AE401.1 Manufactured homes. A manufactured home shall be limited in use to a single dwelling unit.

AE401.2 Accessory buildings. Accessory buildings shall be classified as to occupancy by the building official as set forth in this code.

SECTION AE402
LOCATION ON PROPERTY

AE402.1 General. Manufactured homes and accessory buildings shall be located on the property in accordance with applicable codes and ordinances of this jurisdiction.

SECTION AE501
DESIGN

AE501.1 General. A manufactured home shall be installed on a foundation system which is designed and constructed to sustain within the stress limitations specified in this code and all loads specified in this code.

> **Exception:** When specifically authorized by the building official, foundation and anchorage systems which are constructed in accordance with the methods specified in Section AE600 of these provisions, or in the HUD, *Permanent Foundations for Manufactured Housing,* 1984 Edition, Draft, shall be deemed to meet the requirements of this appendix.

AE501.2 Manufacturer's installation instructions. The installation instructions as provided by the manufacturer of the manufactured home shall be used to determine permissible points of support for vertical loads and points of attachment for anchorage systems used to resist horizontal and uplift forces.

AE501.3 Rationality. Any system or method of construction to be used shall submit to a rational analysis in accordance with well-established principles of mechanics.

SECTION AE502
FOUNDATION SYSTEMS

AE502.1 General. Foundation systems designed and constructed in accordance with this section may be considered a permanent installation.

AE502.2 Soil classification. The classification of the soil at each manufactured home site shall be determined when required by the building official. The building official may require that the determination be made by an engineer or architect licensed by the state to conduct soil investigations.

The classification shall be based on observation and any necessary tests of the materials disclosed by borings or excavations made in appropriate locations. Additional studies may be necessary to evaluate soil strength, the effect of moisture variation on soil-bearing capacity, compressibility and expansiveness.

When required by the building official, the soil classification design-bearing capacity and lateral pressure shall be shown on the plans.

AE502.3 Footings and foundations. Footings and foundations, unless otherwise specifically provided, shall be constructed of materials specified by this code for the intended use and in all cases shall extend below the frost line. Footings of concrete and masonry shall be of solid material. Foundations supporting untreated wood shall extend at least 8 inches (203 mm) above the adjacent finish grade. Footings shall have a minimum depth below finished grade of 12 inches (305 mm) unless a greater depth is recommended by a foundation investigation.

Piers and bearing walls shall be supported on masonry or concrete foundations or piles, or other approved foundation systems which shall be of sufficient capacity to support all loads.

AE502.4 Foundation design. When a design is provided, the foundation system shall be designed in accordance with the applicable structural provisions of this code and shall be designed to minimize differential settlement. Where a design is not provided, the minimum foundation requirements shall be as set forth in this code.

AE502.5 Drainage. Provisions shall be made for the control and drainage of surface water away from the manufactured home.

AE502.6 Under-floor clearances—ventilation and access. A minimum clearance of 12 inches (305 mm) shall be maintained beneath the lowest member of the floor support framing system. Clearances from the bottom of wood floor joists or perimeter joists shall be as specified in this code.

Under-floor spaces shall be ventilated with openings as specified in this code. If combustion air for one or more heat-producing appliance is taken from within the under-floor spaces, ventilation shall be adequate for proper appliance operation.

Under-floor access openings shall be provided. Such openings shall be not less than 18 inches (457 mm) in any dimension and not less than 3 square feet (0.279 m^2) in area, and shall be located so that any water supply and sewer drain connections located under the manufactured home are accessible.

SECTION AE503
SKIRTING AND PERIMETER ENCLOSURES

AE503.1 Skirting and permanent perimeter enclosures. Skirting and permanent perimeter enclosures shall be installed only where specifically required by other laws or ordinances. Skirting, when installed, shall be of material suitable for exterior exposure and contact with the ground. Permanent perimeter enclosures shall be constructed of materials as required by this code for regular foundation construction.

Skirting shall be installed in accordance with the skirting manufacturer's installation instructions. Skirting shall be adequately secured to ensure stability, minimize vibration and susceptibility to wind damage, and compensate for possible frost heave.

AE503.2 Retaining walls. Where retaining walls are used as a permanent perimeter enclosure, they shall resist the lateral displacements of soil or other materials and shall conform to this code as specified for foundation walls. Retaining walls and foundation walls shall be constructed of approved treated wood, concrete, masonry or other approved materials or combination of materials as for foundations as specified in this code. Siding materials shall extend below the top of the exterior of the retaining or foundation wall, or the joint between the siding and enclosure wall shall be flashed in accordance with this code.

SECTION AE504
STRUCTURAL ADDITIONS

AE504.1 General. Accessory buildings shall not be structurally supported by or attached to a manufactured home unless engineering calculations are submitted to substantiate any proposed structural connection.

Exception: The building official may waive the submission of engineering calculations if it is found that the nature of the work applied for is such that engineering calculations are not necessary to show conformance to these provisions.

SECTION AE505
BUILDING SERVICE EQUIPMENT

AE505.1 General. The installation, alteration, repair, replacement, addition to or maintenance of the building service equipment within the manufactured home shall conform to regulations set forth in the Manufactured Home Standards. Such work which is located outside the manufactured home shall comply with the applicable codes adopted by this jurisdiction.

SECTION AE506
EXITS

AE506.1 Site development. Exterior stairways and ramps which provide egress to the public way shall comply with the applicable provisions of this code.

AE506.2 Accessory buildings. Every accessory building or portion thereof shall be provided with exits as required by this code.

SECTION AE507
OCCUPANCY, FIRE SAFETY AND ENERGY CONSERVATION STANDARDS

AE507.1 General. Alterations made to a manufactured home subsequent to its initial installation shall conform to the occupancy, fire safety and energy conservation requirements set forth in the Manufactured Home Standards.

SECTION AE600
SPECIAL REQUIREMENTS FOR FOUNDATION SYSTEMS

AE600.1 General. This section is applicable only where specifically authorized by the building official.

SECTION AE601
FOOTINGS AND FOUNDATIONS

AE601.1 General. The capacity of individual load-bearing piers and their footings shall be sufficient to sustain all loads specified in this code within the stress limitations specified in this code. Footings, unless otherwise approved by the building official, shall be placed level on firm, undisturbed soil or an engineered fill which is free of organic material, such as weeds and grasses. Where used, an engineered fill shall provide a minimum load-bearing capacity of not less than 1,000 pounds per square foot (48 kN/m^2). Continuous footings shall conform to the requirements of this code. Section AE502 of these provisions shall apply to footings and foundations constructed under the provisions of this section.

SECTION AE602
PIER CONSTRUCTION

AE602.1 General. Piers shall be designed and constructed to distribute loads evenly. Multiple-section homes may have concentrated roof loads which will require special consideration. Load-bearing piers may be constructed utilizing one of the following methods listed. Such piers shall be considered to resist only vertical forces acting in a downward direction. They shall not be considered as providing any resistance to horizontal loads induced by wind or earthquake forces.

1. A prefabricated load-bearing device that is listed and labeled for the intended use.
2. Mortar shall comply with ASTM C 270, Type M, S or N; this may consist of one part Portland cement, one-half part hydrated lime and four parts sand by volume. Lime shall not be used with plastic or waterproof cement.
3. A cast-in-place concrete pier with concrete having specified compressive strength at 28 days of 2,500 pounds per square inch (17 225 kPa).

Alternative materials and methods of construction may be used for piers which have been designed by an engineer or architect licensed by the state to practice as such.

Caps and leveling spacers may be used for leveling of the manufactured home. Spacing of piers shall be as specified in the manufacturer's installation instructions, if available, or by an approved designer.

SECTION AE603
HEIGHT OF PIERS

AE603.1 General. Piers constructed as indicated in Section AE602 may have heights as follows:

1. Except for corner piers, piers 36 inches (914 mm) or less in height may be constructed of masonry units, placed with cores or cells vertically. Piers shall be installed with their long dimension at right angles to the main frame member they support and shall have a minimum cross-sectional area of 128 square inches (82 560 mm^2). Piers shall be capped with minimum 4-inch (102 mm) solid masonry units or equivalent.
2. Piers between 36 and 80 inches (914 and 2032 mm) in height and all corner piers greater than 24 inches (610 mm) in height shall be at least 16 inches by 16 inches (406 mm by 406 mm) consisting of interlocking masonry units and shall be fully capped with minimum 4-inch (102 mm) solid masonry units or equivalent.
3. Piers greater than 80 inches (2032 mm) in height may be constructed in accordance with the provisions of Item 2, provided the piers shall be filled solid with grout and reinforced with four continuous No. 5 bars. One bar shall be placed in each corner cell of hollow masonry unit piers or in each corner of the grouted space of piers constructed of solid masonry units.
4. Cast-in-place concrete piers meeting the same size and height limitations of Items 1, 2 and 3 may be substituted for piers constructed of masonry units.

SECTION AE604
ANCHORAGE INSTALLATIONS

AE604.1 Ground anchors. Ground anchors shall be designed and installed to transfer the anchoring loads to the ground. The load-carrying portion of the ground anchors shall be installed to the full depth called for by the manufacturer's installation instructions and shall extend below the established frost line into undisturbed soil.

Manufactured ground anchors shall be listed and installed in accordance with the terms of their listing and the anchor manufacturer's instructions, and shall include the means of attachment of ties meeting the requirements of Section AE605. Ground anchor manufacturer's installation instructions shall include the amount of preload required and load capacity in various types of soil. These instructions shall include tensioning adjustments which may be needed to prevent damage to the manufactured home, particularly damage that can be caused by frost heave. Each ground anchor shall be marked with the manufacturer's identification and listed model identification number which shall be visible after installation. Instructions shall accompany each listed ground anchor specifying the types of soil for which the anchor is suitable under the requirements of this section.

Each approved ground anchor, when installed, shall be capable of resisting an allowable working load at least equal to 3,150 pounds (14 kN) in the direction of the tie plus a 50-percent overload [4,725 pounds (21 kN) total] without failure. Failure shall be considered to have occurred when the anchor moves more than 2 inches (51 mm) at a load of 4,725 pounds (21 kN) in the direction of the tie installation. Those ground anchors which are designed to be installed so that loads on the anchor are other than direct withdrawal shall be designed and installed to resist an applied design load of 3,150 pounds (14 kN) at 40 to 50 degrees from vertical or within the angle limitations specified by the home manufacturer without displacing the tie end of the anchor more than 4 inches (102 mm) horizontally. Anchors designed for the connection of multiple ties shall be capable of resisting the combined working load and overload consistent with the intent expressed herein.

When it is proposed to use ground anchors and the building official has reason to believe that the soil characteristics at a given site are such as to render the use of ground anchors advisable, or when there is doubt regarding the ability of the ground anchors to obtain their listed capacity, the building official may require that a representative field installation be made at the site in question and tested to demonstrate ground-anchor capacity. The building official shall approve the test procedures.

AE604.2 Anchoring equipment. Anchoring equipment, when installed as a permanent installation, shall be capable of resisting all loads as specified within these provisions. When the stabilizing system is designed by an engineer or architect licensed by the state to practice as such, alternative designs may be used, providing the anchoring equipment to be used is capable of withstanding a load equal to 1.5 times the calculated load. All anchoring equipment shall be listed and labeled as being capable of meeting the requirements of these provisions. Anchors as specified in this code may be attached to the main frame of the manufactured home by an approved $^3/_{16}$-inch-thick (4.76 mm) slotted steel plate anchoring device. Other anchoring devices or methods meeting the requirements of these provisions may be permitted when approved by the building official.

Anchoring systems shall be so installed as to be permanent. Anchoring equipment shall be so designed to prevent self-disconnection with no hook ends used.

AE604.3 Resistance to weather deterioration. All anchoring equipment, tension devices and ties shall have a resistance to deterioration as required by this code.

AE604.4 Tensioning devices. Tensioning devices, such as turnbuckles or yoke-type fasteners, shall be ended with clevis or welded eyes.

SECTION AE605
TIES, MATERIALS AND INSTALLATION

AE605.1 General. Steel strapping, cable, chain or other approved materials shall be used for ties. All ties shall be fastened to ground anchors and drawn tight with turnbuckles or other adjustable tensioning devices or devices supplied with the ground anchor. Tie materials shall be capable of resisting an allowable working load of 3,150 pounds (14 kN) with no more than 2 percent elongation and shall withstand a 50-percent overload [4,750 pounds (21 kN)]. Ties shall comply with the weathering requirements of Section AE604.3. Ties shall connect the ground anchor and the main structural frame. Ties shall not connect to steel outrigger beams which fasten to and intersect the main structural frame unless specifically stated in the manufacturer's installation instructions. Connection of cable ties to main frame members shall be $^5/_8$-inch (15.9 mm) closed-eye bolts affixed to the frame member in an approved manner. Cable ends shall be secured with at least two U-bolt cable clamps with the "U" portion of the clamp installed on the short (dead) end of the cable to ensure strength equal to that required by this section.

Wood floor support systems shall be fixed to perimeter foundation walls in accordance with provisions of this code. The minimum number of ties required per side shall be sufficient to resist the wind load stated in this code. Ties shall be as evenly spaced as practicable along the length of the manufactured home with the distance from each end of the home and the tie nearest that end not exceeding 8 feet (2438 mm). When continuous straps are provided as vertical ties, such ties shall be positioned at rafters and studs. Where a vertical tie and diagonal tie are located at the same place, both ties may be connected to a single anchor, provided the anchor used is capable of carrying both loads. Multiple-section manufactured homes require diagonal ties only. Diagonal ties shall be installed on the exterior main frame and slope to the exterior at an angle of 40 to 50 degrees from the vertical or within the angle limitations specified by the home manufacturer. Vertical ties which are not continuous over the top of the manufactured home shall be attached to the main frame.

SECTION AE606
REFERENCED STANDARDS

ASTM C 270—04 Specification for Mortar for Unit Masonry.....AE602

NFPA 501—03 Standard on Manufactured Housing.....AE201

CALIFORNIA RESIDENTIAL CODE – MATRIX ADOPTION TABLE
APPENDIX F – RADON CONTROL METHODS

(Matrix Adoption Tables are non-regulatory, intended only as an aid to the user.
See Chapter 1 for state agency authority and building applications.)

Adopting agency	BSC	SFM	HCD			DSA		OSHPD				BSCC	DHS	AGR	DWR	CEC	CA	SL	SLC
			1	2	1/AC	AC	SS	1	2	3	4								
Adopt entire chapter																			
Adopt entire chapter as amended (amended sections listed below)																			
Adopt only those sections that are listed below																			
[California Code of Regulations, Title 19, Division 1]																			
Chapter / Section																			

* The California Code of Regulations (CCR), Title 19, Division 1 provisions that are found in the *California Fire Code* are a reprint from the current CCR, Title 19, Division 1 text for the code user's convenience only. The scope, applicability and appeals procedures of CCR, Title 19, Division I remain the same.

APPENDIX F
RADON CONTROL METHODS

(The provisions contained in this appendix are not mandatory unless specifically referenced in the adopting ordinance.)

SECTION AF101
SCOPE

AF101.1 General. This appendix contains requirements for new construction in jurisdictions where radon-resistant construction is required.

Inclusion of this appendix by jurisdictions shall be determined through the use of locally available data or determination of Zone 1 designation in Figure AF101 and Table AF101(1).

SECTION AF102
DEFINITIONS

AF102.1 General. For the purpose of these requirements, the terms used shall be defined as follows:

DRAIN TILE LOOP. A continuous length of drain tile or perforated pipe extending around all or part of the internal or external perimeter of a basement or crawl space footing.

RADON GAS. A naturally occurring, chemically inert, radioactive gas that is not detectable by human senses. As a gas, it can move readily through particles of soil and rock, and can accumulate under the slabs and foundations of homes where it can easily enter into the living space through construction cracks and openings.

SOIL-GAS-RETARDER. A continuous membrane of 6-mil (0.15 mm) polyethylene or other equivalent material used to retard the flow of soil gases into a building.

SUBMEMBRANE DEPRESSURIZATION SYSTEM. A system designed to achieve lower submembrane air pressure relative to crawl space air pressure by use of a vent drawing air from beneath the soil-gas-retarder membrane

SUBSLAB DEPRESSURIZATION SYSTEM (Active). A system designed to achieve lower subslab air pressure relative to indoor air pressure by use of a fan-powered vent drawing air from beneath the slab.

SUBSLAB DEPRESSURIZATION SYSTEM (Passive). A system designed to achieve lower subslab air pressure relative to indoor air pressure by use of a vent pipe routed through the conditioned space of a building and connecting the subslab area with outdoor air, thereby relying on the convective flow of air upward in the vent to draw air from beneath the slab.

SECTION AF103
REQUIREMENTS

AF103.1 General. The following construction techniques are intended to resist radon entry and prepare the building for post-construction radon mitigation, if necessary (see Figure AF102). These techniques are required in areas where designated by the jurisdiction.

AF103.2 Subfloor preparation. A layer of gas-permeable material shall be placed under all concrete slabs and other floor systems that directly contact the ground and are within the walls of the living spaces of the building, to facilitate future installation of a subslab depressurization system, if needed. The gas-permeable layer shall consist of one of the following:

1. A uniform layer of clean aggregate, a minimum of 4 inches (102 mm) thick. The aggregate shall consist of

material that will pass through a 2-inch (51 mm) sieve and be retained by a $^1/_4$-inch (6.4 mm) sieve.

2. A uniform layer of sand (native or fill), a minimum of 4 inches (102 mm) thick, overlain by a layer or strips of geotextile drainage matting designed to allow the lateral flow of soil gases.
3. Other materials, systems or floor designs with demonstrated capability to permit depressurization across the entire subfloor area.

AF103.3 Soil-gas-retarder. A minimum 6-mil (0.15 mm) [or 3-mil (0.075 mm) cross-laminated] polyethylene or equivalent flexible sheeting material shall be placed on top of the gas-permeable layer prior to casting the slab or placing the floor assembly to serve as a soil-gas-retarder by bridging any cracks that develop in the slab or floor assembly, and to prevent concrete from entering the void spaces in the aggregate base material. The sheeting shall cover the entire floor area with separate sections of sheeting lapped at least 12 inches (305 mm). The sheeting shall fit closely around any pipe, wire or other penetrations of the material. All punctures or tears in the material shall be sealed or covered with additional sheeting.

AF103.4 Entry routes. Potential radon entry routes shall be closed in accordance with Sections AF103.4.1 through AF103.4.10.

AF103.4.1 Floor openings. Openings around bathtubs, showers, water closets, pipes, wires or other objects that penetrate concrete slabs, or other floor assemblies, shall be filled with a polyurethane caulk or equivalent sealant applied in accordance with the manufacturer's recommendations.

AF103.4.2 Concrete joints. All control joints, isolation joints, construction joints, and any other joints in concrete slabs or between slabs and foundation walls shall be sealed with a caulk or sealant. Gaps and joints shall be cleared of loose material and filled with polyurethane caulk or other elastomeric sealant applied in accordance with the manufacturer's recommendations.

AF103.4.3 Condensate drains. Condensate drains shall be trapped or routed through nonperforated pipe to daylight.

AF103.4.4 Sumps. Sump pits open to soil or serving as the termination point for subslab or exterior drain tile loops shall be covered with a gasketed or otherwise sealed lid. Sumps used as the suction point in a subslab depressurization system shall have a lid designed to accommodate the vent pipe. Sumps used as a floor drain shall have a lid equipped with a trapped inlet.

AF103.4.5 Foundation walls. Hollow block masonry foundation walls shall be constructed with either a continuous course of solid masonry, one course of masonry grouted solid, or a solid concrete beam at or above finished ground surface to prevent the passage of air from the interior of the wall into the living space. Where a brick veneer or other masonry ledge is installed, the course immediately below that ledge shall be sealed. Joints, cracks or other openings around all penetrations of both exterior and interior surfaces of masonry block or wood foundation walls below the ground surface shall be filled with polyurethane caulk or equivalent sealant. Penetrations of concrete walls shall be filled.

AF103.4.6 Dampproofing. The exterior surfaces of portions of concrete and masonry block walls below the ground surface shall be dampproofed in accordance with Section R406.

AF103.4.7 Air-handling units. Air-handling units in crawl spaces shall be sealed to prevent air from being drawn into the unit.

Exception: Units with gasketed seams or units that are otherwise sealed by the manufacturer to prevent leakage.

AF103.4.8 Ducts. Ductwork passing through or beneath a slab shall be of seamless material unless the air-handling system is designed to maintain continuous positive pressure within such ducting. Joints in such ductwork shall be sealed to prevent air leakage.

Ductwork located in crawl spaces shall have all seams and joints sealed by closure systems in accordance with Section M1601.4.1.

AF103.4.9 Crawl space floors. Openings around all penetrations through floors above crawl spaces shall be caulked or otherwise filled to prevent air leakage.

AF103.4.10 Crawl space access. Access doors and other openings or penetrations between basements and adjoining crawl spaces shall be closed, gasketed or otherwise filled to prevent air leakage.

AF103.5 Passive submembrane depressurization system. In buildings with crawl space foundations, the following components of a passive submembrane depressurization system shall be installed during construction.

Exception: Buildings in which an approved mechanical crawl space ventilation system or other equivalent system is installed.

AF103.5.1 Ventilation. Crawl spaces shall be provided with vents to the exterior of the building. The minimum net area of ventilation openings shall comply with Section R408.1.

AF103.5.2 Soil-gas-retarder. The soil in crawl spaces shall be covered with a continuous layer of minimum 6-mil (0.15 mm) polyethylene soil-gas-retarder. The ground cover shall be lapped a minimum of 12 inches (305 mm) at joints and shall extend to all foundation walls enclosing the crawl space area.

AF103.5.3 Vent pipe. A plumbing tee or other approved connection shall be inserted horizontally beneath the sheeting and connected to a 3- or 4-inch-diameter (76 or 102 mm) fitting with a vertical vent pipe installed through the sheeting. The vent pipe shall be extended up through the building floors, and terminate at least 12 inches (305 mm) above the roof in a location at least 10 feet (3048 mm) away from any window or other opening into the conditioned spaces of the building that is less than 2 feet (610 mm) below the exhaust point, and 10 feet (3048 mm)

from any window or other opening in adjoining or adjacent buildings.

AF103.6 Passive subslab depressurization system. In basement or slab-on-grade buildings, the following components of a passive subslab depressurization system shall be installed during construction.

AF103.6.1 Vent pipe. A minimum 3-inch-diameter (76 mm) ABS, PVC or equivalent gas-tight pipe shall be embedded vertically into the subslab aggregate or other permeable material before the slab is cast. A "T" fitting or equivalent method shall be used to ensure that the pipe opening remains within the subslab permeable material. Alternatively, the 3-inch (76 mm) pipe shall be inserted directly into an interior perimeter drain tile loop or through a sealed sump cover where the sump is exposed to the subslab aggregate or connected to it through a drainage system.

The pipe shall be extended up through the building floors, and terminate at least 12 inches (305 mm) above the surface of the roof in a location at least 10 feet (3048 mm) away from any window or other opening into the conditioned spaces of the building that is less than 2 feet (610 mm) below the exhaust point, and 10 feet (3048 mm) from any window or other opening in adjoining or adjacent buildings.

AF103.6.2 Multiple vent pipes. In buildings where interior footings or other barriers separate the subslab aggregate or other gas-permeable material, each area shall be fitted with an individual vent pipe. Vent pipes shall connect to a single vent that terminates above the roof or each individual vent pipe shall terminate separately above the roof.

AF103.7 Vent pipe drainage. All components of the radon vent pipe system shall be installed to provide positive drainage to the ground beneath the slab or soil-gas-retarder.

AF103.8 Vent pipe accessibility. Radon vent pipes shall be accessible for future fan installation through an attic or other area outside the habitable space.

Exception: The radon vent pipe need not be accessible in an attic space where an approved roof-top electrical supply is provided for future use.

AF103.9 Vent pipe identification. All exposed and visible interior radon vent pipes shall be identified with at least one label on each floor and in accessible attics. The label shall read: "Radon Reduction System."

AF103.10 Combination foundations. Combination basement/crawl space or slab-on-grade/crawl space foundations shall have separate radon vent pipes installed in each type of foundation area. Each radon vent pipe shall terminate above the roof or shall be connected to a single vent that terminates above the roof.

AF103.11 Building depressurization. Joints in air ducts and plenums in unconditioned spaces shall meet the requirements of Section M1601. Thermal envelope air infiltration requirements shall comply with the energy conservation provisions in Chapter 11. Fireblocking shall meet the requirements contained in Section R302.11.

AF103.12 Power source. To provide for future installation of an active submembrane or subslab depressurization system, an electrical circuit terminated in an approved box shall be installed during construction in the attic or other anticipated location of vent pipe fans. An electrical supply shall also be accessible in anticipated locations of system failure alarms.

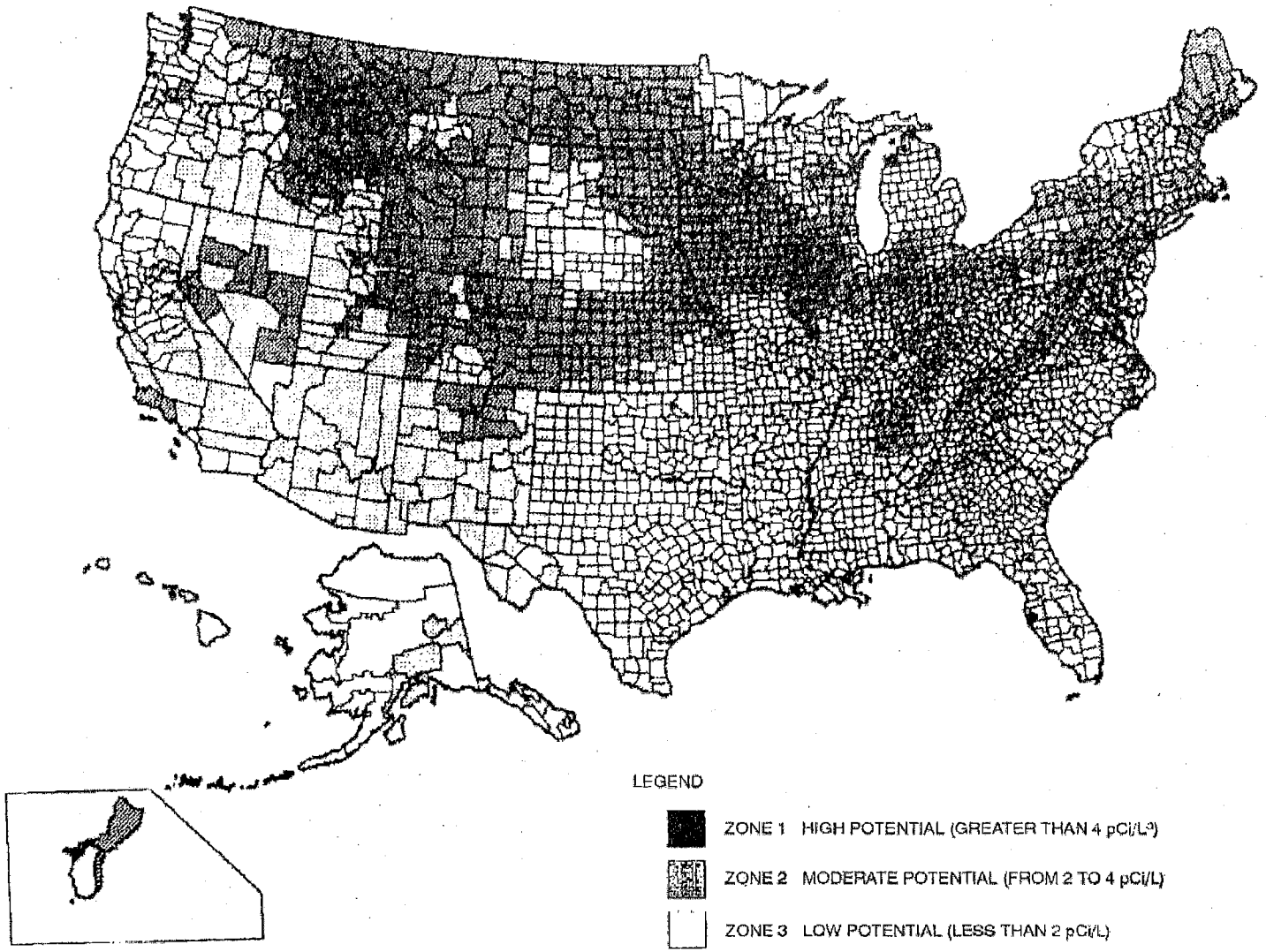

a. pCi/L standard for picocuries per liter of radon gas. The U.S. Environmental Protection Agency (EPA) recommends that all homes that measure 4 pCi/L and greater be mitigated.

The EPA and the U.S. Geological Survey have evaluated the radon potential in the United States and have developed a map of radon zones designed to assist building officials in deciding whether radon-resistant features are applicable in new construction.

The map assigns each of the 3,141 counties in the United States to one of three zones based on radon potential. Each zone designation reflects the average short-term radon measurement that can be expected to be measured in a building without the implementation of radon-control methods. The radon zone designation of highest priority is Zone 1. Table AF101 lists the Zone 1 counties illustrated on the map. More detailed information can be obtained from state-specific booklets (EPA-402-R-93-021 through 070) available through State Radon Offices or from EPA Regional Offices.

FIGURE AF101
EPA MAP OF RADON ZONES

TABLE AF101(1)
HIGH RADON-POTENTIAL (ZONE 1) COUNTIES[a]

ALABAMA
Calhoun
Clay
Cleburne
Colbert
Coosa
Franklin
Jackson
Lauderdale
Lawrence
Limestone
Madison
Morgan
Talladega

CALIFORNIA
Santa Barbara
Ventura

COLORADO
Adams
Arapahoe
Baca
Bent
Boulder
Chaffee
Cheyenne
Clear Creek
Crowley
Custer
Delta
Denver
Dolores
Douglas
El Paso
Elbert
Fremont
Garfield
Gilpin
Grand
Gunnison
Huerfano
Jackson
Jefferson
Kiowa
Kit Carson
Lake
Larimer
Las Animas
Lincoln
Logan
Mesa
Moffat
Montezuma
Montrose
Morgan
Otero
Ouray
Park
Phillips
Pitkin
Prowers
Pueblo
Rio Blanco
San Miguel
Summit
Teller
Washington
Weld
Yuma

CONNECTICUT
Fairfield
Middlesex
New Haven
New London

GEORGIA
Cobb
De Kalb
Fulton
Gwinnett

IDAHO
Benewah
Blaine
Boise
Bonner
Boundary
Butte
Camas
Clark
Clearwater
Custer
Elmore
Fremont
Gooding
Idaho
Kootenai
Latah
Lemhi
Shoshone
Valley

ILLINOIS
Adams
Boone
Brown
Bureau
Calhoun
Carroll
Cass
Champaign
Coles
De Kalb
De Witt
Douglas
Edgar
Ford
Fulton
Greene
Grundy
Hancock
Henderson
Henry
Iroquois
Jersey
Jo Daviess
Kane
Kendall
Knox
La Salle
Lee
Livingston
Logan
Macon
Marshall
Mason
McDonough
McLean
Menard
Mercer
Morgan
Moultrie
Ogle
Peoria
Piatt
Pike
Putnam
Rock Island
Sangamon
Schuyler
Scott
Stark
Stephenson
Tazewell
Vermilion
Warren
Whiteside
Winnebago
Woodford

INDIANA
Adams
Allen
Bartholomew
Benton
Blackford
Boone
Carroll
Cass
Clark
Clinton
De Kalb
Decatur
Delaware
Elkhart
Fayette
Fountain
Fulton
Grant
Hamilton
Hancock
Harrison
Hendricks
Henry
Howard
Huntington
Jay
Jennings
Johnson
Kosciusko
LaGrange
Lawrence
Madison
Marion
Marshall
Miami
Monroe
Montgomery
Noble
Orange
Putnam
Randolph
Rush
Scott
Shelby
St. Joseph
Steuben
Tippecanoe
Tipton
Union
Vermillion
Wabash
Warren
Washington
Wayne
Wells
White
Whitley

IOWA
All Counties

KANSAS
Atchison
Barton
Brown
Cheyenne
Clay
Cloud
Decatur
Dickinson
Douglas
Ellis
Ellsworth
Finney
Ford
Geary
Gove
Graham
Grant
Gray
Greeley
Hamilton
Haskell
Hodgeman
Jackson
Jewell
Johnson
Kearny
Kingman
Kiowa
Lane
Leavenworth
Lincoln
Logan
Marion
Marshall
McPherson
Meade
Mitchell
Nemaha
Ness
Norton
Osborne
Ottawa
Pawnee
Phillips
Pottawatomie
Pratt
Rawlins
Republic
Rice
Riley
Rooks
Rush
Saline
Scott
Sheridan
Sherman
Smith
Stanton
Thomas
Trego
Wallace
Washington
Wichita
Wyandotte

KENTUCKY
Adair
Allen
Barren
Bourbon
Boyle
Bullitt
Casey
Clark
Cumberland
Fayette
Franklin
Green
Harrison
Hart
Jefferson
Jessamine
Lincoln
Marion
Mercer
Metcalfe
Monroe
Nelson
Pendleton
Pulaski
Robertson
Russell
Scott
Taylor
Warren
Woodford

MAINE
Androscoggin
Aroostook
Cumberland
Franklin
Hancock
Kennebec
Lincoln
Oxford
Penobscot
Piscataquis
Somerset
York

MARYLAND
Baltimore
Calvert
Carroll
Frederick
Harford
Howard
Montgomery
Washington

MASS.
Essex
Middlesex
Worcester

MICHIGAN
Branch
Calhoun
Cass
Hillsdale
Jackson
Kalamazoo
Lenawee
St. Joseph
Washtenaw

MINNESOTA
Becker
Big Stone
Blue Earth
Brown
Carver
Chippewa
Clay
Cottonwood
Dakota
Dodge
Douglas
Faribault
Fillmore
Freeborn
Goodhue
Grant
Hennepin
Houston
Hubbard
Jackson
Kanabec
Kandiyohi
Kittson
Lac Qui Parle
Le Sueur
Lincoln
Lyon
Mahnomen
Marshall
Martin
McLeod
Meeker
Mower
Murray
Nicollet
Nobles
Norman
Olmsted
Otter Tail
Pennington
Pipestone
Polk
Pope
Ramsey
Red Lake
Redwood
Renville
Rice
Rock
Roseau
Scott
Sherburne
Sibley
Stearns
Steele
Stevens
Swift
Todd
Traverse
Wabasha
Wadena
Waseca
Washington
Watonwan
Wilkin
Winona
Wright
Yellow Medicine

MISSOURI
Andrew
Atchison
Buchanan
Cass
Clay
Clinton
Holt
Iron
Jackson
Nodaway
Platte

MONTANA
Beaverhead
Big Horn
Blaine
Broadwater
Carbon
Carter
Cascade
Chouteau
Custer
Daniels
Dawson
Deer Lodge
Fallon
Fergus
Flathead
Gallatin
Garfield
Glacier
Granite
Hill
Jefferson
Judith Basin
Lake
Lewis and Clark
Madison
McCone
Meagher
Missoula
Park
Phillips
Pondera
Powder River
Powell
Prairie
Ravalli
Richland
Roosevelt
Rosebud
Sanders
Sheridan
Silver Bow
Stillwater
Teton
Toole
Valley
Wibaux
Yellowstone

(continued)

TABLE AF101(1)—continued
HIGH RADON-POTENTIAL (ZONE 1) COUNTIES[a]

NEBRASKA
Adams
Boone
Boyd
Burt
Butler
Cass
Cedar
Clay
Colfax
Cuming
Dakota
Dixon
Dodge
Douglas
Fillmore
Franklin
Frontier
Furnas
Gage
Gosper
Greeley
Hamilton
Harlan
Hayes
Hitchcock
Hurston
Jefferson
Johnson
Kearney
Knox
Lancaster
Madison
Nance
Nemaha
Nuckolls
Otoe
Pawnee
Phelps
Pierce
Platte
Polk
Red Willow
Richardson
Saline
Sarpy
Saunders
Seward
Stanton
Thayer
Washington
Wayne
Webster
York

NEVADA
Carson City
Douglas
Eureka
Lander
Lincoln
Lyon
Mineral
Pershing
White Pine

NEW HAMPSHIRE
Carroll

NEW JERSEY
Hunterdon
Mercer
Monmouth
Morris
Somerset
Sussex
Warren

NEW MEXICO
Bernalillo
Colfax
Mora
Rio Arriba
San Miguel
Santa Fe
Taos

NEW YORK
Albany
Allegany
Broome
Cattaraugus
Cayuga
Chautauqua
Chemung
Chenango
Columbia
Cortland
Delaware
Dutchess
Erie
Genesee
Greene
Livingston
Madison
Onondaga
Ontario
Orange
Otsego
Putnam
Rensselaer
Schoharie
Schuyler
Seneca
Steuben
Sullivan
Tioga
Tompkins
Ulster
Washington
Wyoming
Yates

N. CAROLINA
Alleghany
Buncombe
Cherokee
Henderson
Mitchell
Rockingham
Transylvania
Watauga

N. DAKOTA
All Counties

OHIO
Adams
Allen
Ashland
Auglaize
Belmont
Butler
Carroll
Champaign
Clark
Clinton
Columbiana
Coshocton
Crawford
Darke
Delaware
Fairfield
Fayette
Franklin
Greene
Guernsey
Hamilton
Hancock
Hardin
Harrison
Holmes
Huron
Jefferson
Knox
Licking
Logan
Madison
Marion
Mercer
Miami
Montgomery
Morrow
Muskingum
Perry
Pickaway
Pike
Preble
Richland
Ross
Seneca
Shelby
Stark
Summit
Tuscarawas
Union
Van Wert
Warren
Wayne
Wyandot

PENNSYLVANIA
Adams
Allegheny
Armstrong
Beaver
Bedford
Berks
Blair
Bradford
Bucks
Butler
Cameron
Carbon
Centre
Chester
Clarion
Clearfield
Clinton
Columbia
Cumberland
Dauphin
Delaware
Franklin
Fulton
Huntingdon
Indiana
Juniata
Lackawanna
Lancaster
Lebanon
Lehigh
Luzerne
Lycoming
Mifflin
Monroe
Montgomery
Montour
Northampton
Northumberland
Perry
Schuylkill
Snyder
Sullivan
Susquehanna
Tioga
Union
Venango
Westmoreland
Wyoming
York

RHODE ISLAND
Kent
Washington

S. CAROLINA
Greenville

S. DAKOTA
Aurora
Beadle
Bon Homme
Brookings
Brown
Brule
Buffalo
Campbell
Charles Mix
Clark
Clay
Codington
Corson
Davison
Day
Deuel
Douglas
Edmunds
Faulk
Grant
Hamlin
Hand
Hanson
Hughes
Hutchinson
Hyde
Jerauld
Kingsbury
Lake
Lincoln
Lyman
Marshall
McCook
McPherson
Miner
Minnehaha
Moody
Perkins
Potter
Roberts
Sanborn
Spink
Stanley
Sully
Turner
Union
Walworth
Yankton

TENNESEE
Anderson
Bedford
Blount
Bradley
Claiborne
Davidson
Giles
Grainger
Greene
Hamblen
Hancock
Hawkins
Hickman
Humphreys
Jackson
Jefferson
Knox
Lawrence
Lewis
Lincoln
Loudon
Marshall
Maury
McMinn
Meigs
Monroe
Moore
Perry
Roane
Rutherford
Smith
Sullivan
Trousdale
Union
Washington
Wayne
Williamson
Wilson

UTAH
Carbon
Duchesne
Grand
Piute
Sanpete
Sevier
Uintah

VIRGINIA
Alleghany
Amelia
Appomattox
Augusta
Bath
Bland
Botetourt
Bristol
Brunswick
Buckingham
Buena Vista
Campbell
Chesterfield
Clarke
Clifton Forge
Covington
Craig
Cumberland
Danville
Dinwiddie
Fairfax
Falls Church
Fluvanna
Frederick
Fredericksburg
Giles
Goochland
Harrisonburg
Henry
Highland
Lee
Lexington
Louisa
Martinsville
Montgomery
Nottoway
Orange
Page
Patrick
Pittsylvania
Powhatan
Pulaski
Radford
Roanoke
Rockbridge
Rockingham
Russell
Salem
Scott
Shenandoah
Smyth
Spotsylvania
Stafford
Staunton
Tazewell
Warren
Washington
Waynesboro
Winchester
Wythe

WASHINGTON
Clark
Ferry
Okanogan
Pend Oreille
Skamania
Spokane
Stevens

W. VIRGINIA
Berkeley
Brooke
Grant
Greenbrier
Hampshire
Hancock
Hardy
Jefferson
Marshall
Mercer
Mineral
Monongalia
Monroe
Morgan
Ohio
Pendleton
Pocahontas
Preston
Summers
Wetzel

WISCONSIN
Buffalo
Crawford
Dane
Dodge
Door
Fond du Lac
Grant
Green
Green Lake
Iowa
Jefferson
Lafayette
Langlade
Marathon
Menominee
Pepin
Pierce
Portage
Richland
Rock
Shawano
St. Croix
Vernon
Walworth
Washington
Waukesha
Waupaca
Wood

WYOMING
Albany
Big Horn
Campbell
Carbon
Converse
Crook
Fremont
Goshen
Hot Springs
Johnson
Laramie
Lincoln
Natrona
Niobrara
Park
Sheridan
Sublette
Sweetwater
Teton
Uinta
Washakie

a. The EPA recommends that this county listing be supplemented with other available State and local data to further understand the radon potential of a Zone 1 area.

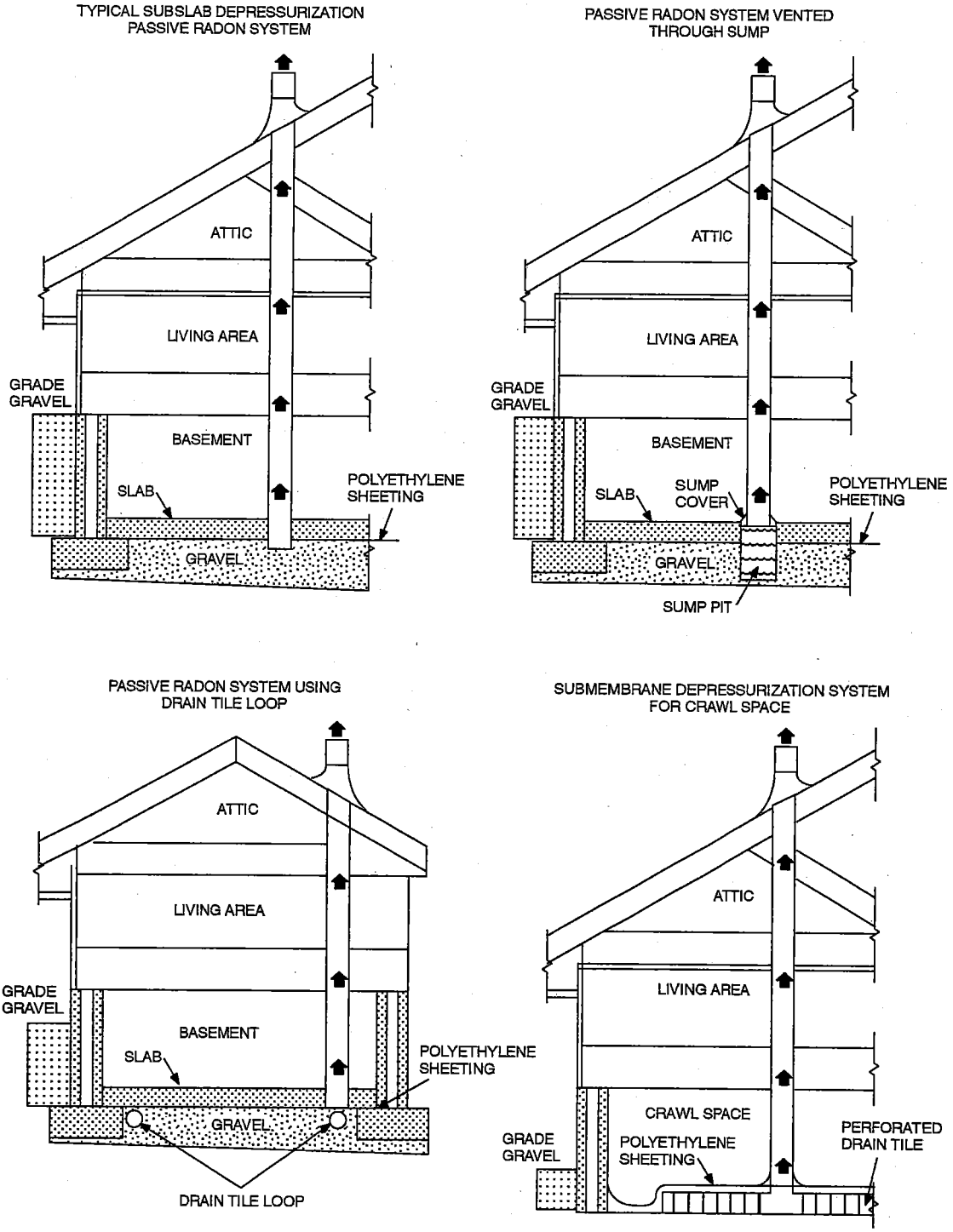

FIGURE AF102
RADON-RESISTANT CONSTRUCTION DETAILS FOR FOUR FOUNDATION TYPES

CALIFORNIA RESIDENTIAL CODE – MATRIX ADOPTION TABLE
APPENDIX G – SWIMMING POOLS, SPAS AND HOT TUBS

(Matrix Adoption Tables are non-regulatory, intended only as an aid to the user.
See Chapter 1 for state agency authority and building applications.)

Adopting agency	BSC	SFM	HCD			DSA		OSHPD				BSCC	DHS	AGR	DWR	CEC	CA	SL	SLC
			1	2	1/AC	AC	SS	1	2	3	4								
Adopt entire chapter																			
Adopt entire chapter as amended (amended sections listed below)																			
Adopt only those sections that are listed below																			
[California Code of Regulations, Title 19, Division 1]																			
Chapter / Section																			

* The California Code of Regulations (CCR), Title 19, Division 1 provisions that are found in the *California Fire Code* are a reprint from the current CCR, Title 19, Division 1 text for the code user's convenience only. The scope, applicability and appeals procedures of CCR, Title 19, Division I remain the same.

APPENDIX G

SWIMMING POOLS, SPAS AND HOT TUBS

(The provisions contained in this appendix are not mandatory unless specifically referenced in the adopting ordinance. Note: See Chapter 31, Section 3109 of the California Building Code, Title 24, Part 2.)

SECTION AG100
SWIMMING POOL SAFETY ACT

AG100 Private swimming pools (statewide). *These regulations are subject to local government modification. The applicable local government requirements at the time of application for a building permit should be verified. These standards become applicable commencing January 1, 1998, to a private, single-family home for which a construction permit for a new swimming pool has been issued on or after January 1, 1998.*

AG100.1 Definitions. *As used in this division, the following terms have the following meanings:*

ANSI/APSP PERFORMANCE STANDARD *means a standard that is accredited by the American National Standards Institute (ANSI) and published by the Association of Pool and Spa Professionals (APSP).*

APPROVED SAFETY POOL COVER *means a manually or power-operated safety pool cover that meets all of the performance standards of the American Society for Testing and Materials (ASTM), in compliance with Standard F 1346-91.*

ENCLOSURE *means a fence, wall or other barrier that isolates a swimming pool from access to the home.*

EXIT ALARMS *means devices that make audible, continuous alarm sounds when any door or window that permits access from the residence to the pool area, that is without any intervening enclosure, is opened or is left ajar. Exit alarms may be battery operated or may be connected to the electrical wiring of the building.*

PUBLIC SWIMMING POOL *means a swimming pool operated for the use of the general public with or without charge, or for the use of the members and guests of a private club. Public swimming pool does not include a swimming pool located on the grounds of a private single-family home.*

SUCTION OUTLET *means a fitting or fixture typically located at the bottom or on the sides of a swimming pool that conducts water to a recirculating pump.*

SWIMMING POOL *or* ***POOL*** *means any structure intended for swimming or recreational bathing that contains water over 18 inches (457 mm) deep. Swimming pool includes in-ground and above-ground structures and includes, but is not limited to, hot tubs, spas, portable spas and nonportable wading pools.*

Authority: Health and Safety Code Section 18942(b)
Reference: Health and Safety Code Section 115921
Ab 3305, (Statutes 1996, C.925); Ab 2697, (Statutes 2012, c. 770)

AG100.2 Construction permit; safety features required. *Commencing January 1, 2007, except as provided in Section AG100.5, whenever a building permit is issued for construction of a new swimming pool or spa, or any building permit is issued for remodeling of an existing pool or spa, at a private, single-family home, it shall be equipped with at least one of the following seven drowning prevention safety features:*

1. *The pool shall be isolated from access to a home by an enclosure that meets the requirements of Section AG100.3.*
2. *The pool shall incorporate removable mesh pool fencing that meets American Society for Testing and Materials (ASTM) Specifications F 2286 standards in*

conjunction with a gate that is self-closing and self-latching and can accommodate a key lockable device.

3. *The pool shall be equipped with an approved safety pool cover that meets all requirements of ASTM Specifications F 1346.*
4. *The residence shall be equipped with exit alarms on those doors providing direct access to the pool.*
5. *All doors providing direct access from the home to the swimming pool shall be equipped with a self-closing, self-latching device with a release mechanism placed no lower than 54 inches (1372 mm) above the floor.*
6. *Swimming pool alarms that, when placed in pools, will sound upon detection of accidental or unauthorized entrance into the water. These pool alarms shall meet and be independently certified to the ASTM Standard F 2208 "Standards Specification for Pool Alarms," which includes surface motion, pressure, sonar, laser and infrared type alarms. For purposes of this article, "swimming pool alarms" shall not include swimming protection alarm devices designed for individual use, such as an alarm attached to a child that sounds when the child exceeds a certain distance or becomes submerged in water.*
7. *Other means of protection, if the degree of protection afforded is equal to or greater than that afforded by any of the devices set forth in Items 1–4, and have been independently verified by an approved testing laboratory as meeting standards for those devices established by the ASTM or the American Society of Testing Mechanical Engineers (ASME).*

Prior to the issuance of any final approval for the completion of permitted construction or remodeling work, the local building code official shall inspect the drowning safety prevention devices required by this act, and if no violations are found shall give final approval.

Authority: *Health and Safety Code Section 18942(b)*
Reference: *Health and Safety Code Section 115922*
AB 3305 (Statutes 1996, c.925); AB 2977 (Statutes 2006, c.926); AB 382 (Statutes 2007, c.596); AB 2697 (Statutes 2012, c. 770)

AG100.3 Enclosure; required characteristics. *An enclosure shall have all of the following characteristics:*

1. *Any access gates through the enclosure open away from the swimming pool and are self-closing with a self-latching device placed no lower than 60 inches (1524 mm) above the ground.*
2. *A minimum height of 60 inches (1524 mm).*
3. *A maximum vertical clearance from the ground to the bottom of the enclosure of 2 inches (51 mm).*
4. *Gaps or voids, if any, do not allow passage of a sphere equal to or greater than 4 inches (102 mm) in diameter.*
5. *An outside surface free of protrusions, cavities or other physical characteristics that would serve as handholds or footholds that could enable a child below the age of five years to climb over.*

Authority: *Health and Safety Code Section 18942(b)*
Reference: *Health and Safety Code Section 115923*
Ab 3305, Statutes 1996, C.925

AG100.4 Agreements to build; notice of provisions. *Any person entering into an agreement to build a swimming pool or spa, or to engage in permitted work on a pool or spa covered by this article, shall give the consumer notice of the requirements of this article.*

Pursuant to existing law, the Department of Health Services shall have available on the department's web site, commencing January 1, 2007, approved pool safety information available for consumers to download. Pool contractors are encouraged to share this information with consumers regarding the potential dangers a pool or spa poses toddlers. Additionally, pool contractors may provide the consumer with swimming pool safety materials produced from organizations such as the United States Consumer Product Safety Commission, Drowning Prevention Foundation, California Coalition for Children's Safety & Health, Safe Kids Worldwide, Association of Pool and Spa Professionals, or the American Academy of Pediatrics.

Authority: *Health and Safety Code Section 18942(b)*
Reference: *Health and Safety Code Section 115924*
AB 3305 (Statutes 1996, c.925); AB 2977 (Statutes 2006, c.926); AB 382 (Statutes 2007, c.596); AB 2697, (Statutes 2012, c. 770)

AG100.5 Exempt facilities. *The requirements of this article shall not apply to any of the following:*

1. *Public swimming pools.*
2. *Hot tubs or spas with locking safety covers that comply with the American Society for Testing Materials Emergency Performance Specification (ASTM ES 13-89).*
3. *Any pool within the jurisdiction of any political subdivision that adopts an ordinance for swimming pool safety that includes requirements that are at least as stringent as this division.*
4. *An apartment complex or any residential setting other than a single-family home.*

Authority: *Health and Safety Code Section 18942(b)*
Reference: *Health and Safety Code Section 115925*
Ab 3305, (Statutes 1996, c.925); AB 2977 (Statutes 2006, c.926); AB 382 (Statutes 2007,c.596); AB 2697, (Statutes 2012, c. 770)

AG100.6 Application to facilities regulated by Department of Social Services. *This division does not apply to any facility regulated by the State Department of Social Services even if the facility is also used as a private residence of the operator. Pool safety in those facilities shall be regulated pursuant to regulations adopted therefor by the State Department of Social Services.*

Authority: *Health and Safety Code Section 18942(b)*
Reference: *Health and Safety Code Section 115926*
Ab 3305, Statutes 1996, c.925); AB 2977 (Statutes 2006 c.926); AB 382 (Statutes 2007, c.596); AB 2697, (Statutes 2012, c. 770)

AG100.7 Modification and interpretation of division. *Notwithstanding any other provision of law, this article shall not be subject to further modification or interpretation by any regulatory agency of the state, this authority being reserved exclusively to local jurisdictions, as provided for in Item 5 of AG100.2 and Item 3 of AG100.5.*

Authority: *Health and Safety Code Section 18942(b)*
Reference: *Health and Safety Code Section 115927 AB 3305 (Statutes 1996, c.925); AB 2977 (Statutes 2006, c.926); AB 382 (Statutes 2007, c.596); AB 2697, (Statutes 2012, c. 770)*

AG100.8 Construction requirements for building a pool or spa. *Whenever a building permit is issued for the construction a new swimming pool or spa, the pool or spa shall meet all of the following requirements:*

1. *The suction outlets of the pool or spa for which the permit is issued shall be equipped to provide circulation throughout the pool or spa as prescribed in Paragraphs 2 and 3.*
2. *The swimming pool or spa shall either have at least two circulation suction outlets per pump that shall be hydraulically balanced and symmetrically plumbed through one or more "T" fittings, and that are separated by a distance of at least three feet in any dimension between the suction outlets, or be designed to use alternatives to suction outlets, including, but not limited to, skimmers or perimeter overflow systems to conduct water to the recirculation pump.*
3. *The circulation system shall have the capacity to provide a complete turnover of pool water, as specified in Section 3124B of Chapter 31B of the California Building Standards Code (Title 24 of the California Code of Regulations).*
4. *Suction outlets shall be covered with anti-entrapment grates, as specified in the ANSI/APSP-16 performance standard or successor standard designated by the federal Consumer Product Safety Commission, that cannot be removed except with the use of tools. Slots of openings in the grates or similar protective devices shall be of a shape, area and arrangement that would prevent physical entrapment and would not pose any suction hazard to bathers.*
5. *Any backup safety system that an owner of a new swimming pools or spa may choose to install in addition to the requirements set forth in subdivisions (1) through (4) above shall meet the standards as published in the document, "Guidelines for Entrapment Hazards: Making Pools and Spas Safer," Publication Number 363, March 2005, United States Consumer Products Safety Commission.*
6. *Whenever a building permit is for the remodel or modification of any existing swimming pool, toddler pool, or spa, the permit shall require that the suction outlet or suction outlets of the existing swimming pool, toddler pool, or spa be upgraded so as to be equipped with anti-entrapment grates, as specified in the ANSI/APSP-16 performance standard or a successor standard designated by the federal Consumer Product Safety Commission.*

Authority: *Health and Safety Code Section 18942(b)*
Reference: *Health and Safety Code Section 115928 AB 3305 (Statutes 1996, c.925); AB 2977 (Statutes 2006, c.926); AB 382 (Statutes 2007, c.596); AB 2697, (Statutes 2012, c. 770)*

AG100.9 Informative documents.

1. *The legislature encourages a private entity, in consultation with the Epidemiology and Prevention for Injury Control Branch of the department, to produce an informative brochure or booklet, for consumer use, explaining the child drowning hazards of, possible safety measures for, and appropriate drowning hazard prevention measures for, home swimming pools and spas, and to donate the document to the department.*
2. *The legislature encourages the private entity to use existing documents from the United States Consumer Product Safety Commission on pool safety.*
3. *If a private entity produces the document described in Subdivisions 1 and 2 and donates it to the department, the department shall review and approve the brochure or booklet.*
4. *Upon approval of the document by the department, the document shall become the property of the state and a part of the public domain. The department shall place the document on its website in a format that is readily available for downloading and for publication. The department shall review the document in a timely and prudent fashion and shall complete the review within 18 months of receipt of the document from a private entity.*

SECTION AG101
GENERAL

AG101.1 General. The provisions of this appendix shall control the design and construction of swimming pools, spas and hot tubs installed in or on the lot of a one- or two-family dwelling.

AG101.2 Pools in flood hazard areas. Pools that are located in flood hazard areas established by Table R301.2(1), including above-ground pools, on-ground pools and in-ground pools that involve placement of fill, shall comply with Section AG101.2.1 or AG101.2.2.

Exception: Pools located in riverine flood hazard areas which are outside of designated floodways.

AG101.2.1 Pools located in designated floodways. Where pools are located in designated floodways, documentation shall be submitted to the building official which demonstrates that the construction of the pool will not increase the design flood elevation at any point within the jurisdiction.

AG101.2.2 Pools located where floodways have not been designated. Where pools are located where design flood elevations are specified but floodways have not been designated, the applicant shall provide a floodway analysis that demonstrates that the proposed pool will not increase

the design flood elevation more than 1 foot (305 mm) at any point within the jurisdiction.

SECTION AG102
DEFINITIONS

AG102.1 General. For the purposes of these requirements, the terms used shall be defined as follows and as set forth in Chapter 2.

ABOVE-GROUND/ON-GROUND POOL. See "Swimming pool."

BARRIER. A fence, wall, building wall or combination thereof which completely surrounds the swimming pool and obstructs access to the swimming pool.

HOT TUB. See "Swimming pool."

IN-GROUND POOL. See "Swimming pool."

RESIDENTIAL. That which is situated on the premises of a detached one- or two-family dwelling, or a one-family townhouse not more than three stories in height.

SPA, NONPORTABLE. See "Swimming pool."

SPA, PORTABLE. A nonpermanent structure intended for recreational bathing, in which all controls, water-heating and water-circulating equipment are an integral part of the product.

SWIMMING POOL. Any structure intended for swimming or recreational bathing that contains water more than 24 inches (610 mm) deep. This includes in-ground, above-ground and on-ground swimming pools, hot tubs and spas.

SWIMMING POOL, INDOOR. A swimming pool which is totally contained within a structure and surrounded on all four sides by the walls of the enclosing structure.

SWIMMING POOL, OUTDOOR. Any swimming pool which is not an indoor pool.

SECTION AG103
SWIMMING POOLS

AG103.1 In-ground pools. In-ground pools shall be designed and constructed in compliance with ANSI/NSPI-5.

AG103.2 Above-ground and on-ground pools. Above-ground and on-ground pools shall be designed and constructed in compliance with ANSI/NSPI-4.

AG103.3 Pools in flood hazard areas. In flood hazard areas established by Table R301.2(1), pools in coastal high-hazard areas shall be designed and constructed in compliance with ASCE 24.

SECTION AG104
SPAS AND HOT TUBS

AG104.1 Permanently installed spas and hot tubs. Permanently installed spas and hot tubs shall be designed and constructed in compliance with ANSI/NSPI-3.

AG104.2 Portable spas and hot tubs. Portable spas and hot tubs shall be designed and constructed in compliance with ANSI/NSPI-6.

SECTION AG105
BARRIER REQUIREMENTS

AG105.1 Application. The provisions of this appendix shall control the design of barriers for residential swimming pools, spas and hot tubs. These design controls are intended to provide protection against potential drownings and near-drownings by restricting access to swimming pools, spas and hot tubs.

AG105.2 Outdoor swimming pool. An outdoor swimming pool, including an in-ground, above-ground or on-ground pool, hot tub or spa, shall be surrounded by a barrier which shall comply with the following:

1. The top of the barrier shall be at least 48 inches (1219 mm) above grade measured on the side of the barrier which faces away from the swimming pool. The maximum vertical clearance between grade and the bottom of the barrier shall be 2 inches (51 mm) measured on the side of the barrier which faces away from the swimming pool. Where the top of the pool structure is above grade, such as an above-ground pool, the barrier may be at ground level, such as the pool structure, or mounted on top of the pool structure. Where the barrier is mounted on top of the pool structure, the maximum vertical clearance between the top of the pool structure and the bottom of the barrier shall be 4 inches (102 mm).
2. Openings in the barrier shall not allow the passage of a 4-inch-diameter (102 mm) sphere.
3. Solid barriers which do not have openings, such as a masonry or stone wall, shall not contain indentations or protrusions, except for normal construction tolerances and tooled masonry joints.
4. Where the barrier is composed of horizontal and vertical members, and the distance between the tops of the horizontal members is less than 45 inches (1143 mm), the horizontal members shall be located on the swimming pool side of the fence. Spacing between vertical members shall not exceed $1^3/_4$ inches (44 mm) in width. Where there are decorative cutouts within vertical members, spacing within the cutouts shall not exceed $1^3/_4$ inches (44 mm) in width.
5. Where the barrier is composed of horizontal and vertical members, and the distance between the tops of the horizontal members is 45 inches (1143 mm) or more, spacing between vertical members shall not exceed 4 inches (102 mm). Where there are decorative cutouts within vertical members, spacing within the cutouts shall not exceed $1^3/_4$ inches (44 mm) in width.
6. Maximum mesh size for chain link fences shall be a $2^1/_4$-inch (57 mm) square, unless the fence has slats fastened at the top or the bottom which reduce the openings to not more than $1^3/_4$ inches (44 mm).

7. Where the barrier is composed of diagonal members, such as a lattice fence, the maximum opening formed by the diagonal members shall not be more than $1^3/_4$ inches (44 mm).
8. Access gates shall comply with the requirements of Items 1 through 7, and shall be equipped to accommodate a locking device. Pedestrian access gates shall open outward away from the pool, and shall be self-closing and have a self-latching device. Gates, other than pedestrian access gates, shall have a self-latching device. Where the release mechanism of the self-latching device is located less than 54 inches (1372 mm) from the bottom of the gate, the release mechanism and openings shall comply with the following:
   8.1. The release mechanism shall be located on the pool side of the gate at least 3 inches (76 mm) below the top of the gate; and
   8.2. The gate and barrier shall have no opening larger than $^1/_2$ inch (12.7 mm) within 18 inches (457 mm) of the release mechanism.
9. Where a wall of a dwelling serves as part of the barrier, one of the following conditions shall be met:
   9.1. The pool shall be equipped with a powered safety cover in compliance with ASTM F 1346;
   9.2. Doors with direct access to the pool through that wall shall be equipped with an alarm which produces an audible warning when the door and/or its screen, if present, are opened. The alarm shall be listed and labeled in accordance with UL 2017. The deactivation switch(es) shall be located at least 54 inches (1372 mm) above the threshold of the door; or
   9.3. Other means of protection, such as self-closing doors with self-latching devices, which are approved by the governing body, shall be acceptable as long as the degree of protection afforded is not less than the protection afforded by Item 9.1 or 9.2 described herein.
10. Where an above-ground pool structure is used as a barrier or where the barrier is mounted on top of the pool structure, and the means of access is a ladder or steps:
   10.1. The ladder or steps shall be capable of being secured, locked or removed to prevent access; or
   10.2. The ladder or steps shall be surrounded by a barrier which meets the requirements of Items 1 through 9. When the ladder or steps are secured, locked or removed, any opening created shall not allow the passage of a 4-inch-diameter (102 mm) sphere.

AG105.3 Indoor swimming pool. Walls surrounding an indoor swimming pool shall comply with Item 9 of Section AG105.2.

AG105.4 Prohibited locations. Barriers shall be located to prohibit permanent structures, equipment or similar objects from being used to climb them.

AG105.5 Barrier exceptions. Spas or hot tubs with a safety cover which comply with ASTM F 1346 shall be exempt from the provisions of this appendix.

SECTION AG106
ENTRAPMENT PROTECTION FOR SWIMMING POOL AND SPA SUCTION OUTLETS

AG106.1 General. Suction outlets shall be designed and installed in accordance with ANSI/APSP-7.

SECTION AG107
ABBREVIATIONS

AG107.1 General.

ANSI—American National Standards Institute
11 West 42nd Street
New York, NY 10036

APSP—Association of Pool and Spa Professionals
NSPI—National Spa and Pool Institute
2111 Eisenhower Avenue
Alexandria, VA 22314

ASCE—American Society of Civil Engineers
1801 Alexander Bell Drive
Reston, VA 98411-0700

ASTM—ASTM International
100 Barr Harbor Drive
West Conshohocken, PA 19428

UL—Underwriters Laboratories, Inc.
333 Pfingsten Road
Northbrook, IL 60062-2096

SECTION AG108
REFERENCED STANDARDS

AG108.1 General.

ANSI/NSP

ANSI/NSPI-3—99 Standard for Permanently Installed Residential Spas AG104.1

ANSI/NSPI-4—99 Standard for Above-ground/On-ground Residential Swimming Pools AG103.2

ANSI/NSPI-5—03 Standard for Residential In-ground Swimming Pools . AG103.1

ANSI/NSPI-6—99 Standard for Residential Portable Spas AG104.2

ANSI/APSP

ANSI/APSP-7—06 Standard for Suction Entrapment Avoidance in Swimming Pools, Wading Pools, Spas, Hot Tubs and Catch Basins AG106.1

ASCE

ASCE/SEI-24—05 Flood-resistant Design and Construction AG103.3

ASTM

ASTM F 1346—91 (2003) Performance Specification for Safety Covers and Labeling Requirements for All Covers for Swimming Pools Spas and Hot Tubs AG105.2, AG105.5

UL

UL 2017—2000 Standard for General-purpose Signaling Devices and Systems—with revisions through June 2004 ..... AG105.2

CALIFORNIA RESIDENTIAL CODE – MATRIX ADOPTION TABLE
APPENDIX H – PATIO COVERS

(Matrix Adoption Tables are non-regulatory, intended only as an aid to the user.
See Chapter 1 for state agency authority and building applications.)

Adopting agency	BSC	SFM	HCD			DSA		OSHPD				BSCC	DHS	AGR	DWR	CEC	CA	SL	SLC
			1	2	1/AC	AC	SS	1	2	3	4								
Adopt entire chapter			X																
Adopt entire chapter as amended (amended sections listed below)																			
Adopt only those sections that are listed below																			
[California Code of Regulations, Title 19, Division 1]																			
Chapter / Section																			

* The California Code of Regulations (CCR), Title 19, Division 1 provisions that are found in the *California Fire Code* are a reprint from the current CCR, Title 19, Division 1 text for the code user's convenience only. The scope, applicability and appeals procedures of CCR, Title 19, Division I remain the same.

APPENDIX H
PATIO COVERS

(The provisions contained in this appendix are not mandatory unless specifically referenced in the adopting ordinance.)

SECTION AH101
GENERAL

AH101.1 Scope. Patio covers shall conform to the requirements of Sections AH101 through AH105.

AH101.2 Permitted uses. Patio covers shall be permitted to be detached from or attached to dwelling units. Patio covers shall be used only for recreational, outdoor living purposes, and not as carports, garages, storage rooms or habitable rooms.

SECTION AH102
DEFINITION

AH102.1 General. The following word and term shall, for the purposes of this appendix, have the meaning shown herein.

PATIO COVER. A structure with open or glazed walls which is used for recreational, outdoor living purposes associated with a dwelling unit.

SECTION AH103
EXTERIOR WALLS AND OPENINGS

AH 103.1 Enclosure walls. Enclosure walls shall be permitted to be of any configuration, provided the open or glazed area of the longer wall and one additional wall is equal to at least 65 percent of the area below a minimum of 6 feet, 8 inches (2032 mm) of each wall, measured from the floor. Openings shall be permitted to be enclosed with the following:

1. Insect screening;
2. Approved translucent or transparent plastic not more than 0.125 inch (3.2 mm) in thickness;
3. Glass conforming to the provisions of Section R308; or
4. Any combination of the foregoing.

AH103.2 Light, ventilation and emergency egress. Exterior openings required for light and ventilation shall be permitted to open into a patio structure conforming to Section AH101, provided that the patio structure shall be unenclosed if such openings are serving as emergency egress or rescue openings from sleeping rooms. Where such exterior openings serve as an exit from the dwelling unit, the patio structure, unless unenclosed, shall be provided with exits conforming to the provisions of Section R311 of this code.

SECTION AH104
HEIGHT

AH104.1 Height. Patio covers are limited to one-story structures not exceeding 12 feet (3657 mm) in height.

SECTION AH105
STRUCTURAL PROVISIONS

AH105.1 Design loads. Patio covers shall be designed and constructed to sustain, within the stress limits of this code, all dead loads plus a minimum vertical live load of 10 pounds per square foot (0.48 kN/m^2), except that snow loads shall be used where such snow loads exceed this minimum. Such cov-

ers shall be designed to resist the minimum wind loads set forth in Section R301.2.1.

AH105.2 Footings. In areas with a frostline depth of zero as specified in Table R301.2(1), a patio cover shall be permitted to be supported on a slab-on-grade without footings, provided the slab conforms to the provisions of Section R506, is not less than 3.5 inches (89 mm) thick and the columns do not support live and dead loads in excess of 750 pounds (3.34 kN) per column.

SECTION AH106
SPECIAL PROVISIONS FOR ALUMINUM SCREEN ENCLOSURES IN HURRICANE-PRONE REGIONS

AH106.1 General. Screen enclosures in hurricane-prone regions shall be in accordance with the provisions of this Section.

AH106.1.1 Habitable spaces. Screen enclosures shall not be considered habitable spaces.

AH106.1.2 Minimum ceiling height. Screen enclosures shall have a ceiling height of not less than 7 feet (2134 mm).

AH106.2 Definition. The following word and term shall, for the purposes of this appendix, have the meaning shown herein.

SCREEN ENCLOSURE. A building or part thereof, in whole or in part self-supporting, and having walls of insect screening, and a roof of insect screening, plastic, aluminum or similar lightweight material.

AH106.3 Screen enclosures. Screen enclosures shall comply with Sections AH106.3.1 and AH106.3.2

AH106.3.1 Thickness. Actual wall thickness of extruded aluminum members shall be not less than 0.040 inch (1.02 mm).

AH106.3.2 Density. Screen density shall be a maximum of 20 threads per inch by 20 threads per inch mesh.

AH106.4 Design. The structural design of screen enclosures shall comply with Sections AH106.4.1 through AH106.4.4.

AH106.4.1 Wind load. Structural members supporting screen enclosures shall be designed to support the minimum wind loads given in Tables AH106.4(1) and AH106.4(2). Where any value is less than 10 pounds per square foot (psf) (0.479 kN/m^2) use 10 pounds per square feet (0.479 kN/m^2).

AH106.4.2 Deflection limit. For members supporting screen surfaces only, the total load deflection shall not exceed *l*/60. Screen surfaces shall be permitted to include a maximum of 25-percent solid flexible finishes.

TABLE AH106.4(1)
DESIGN WIND PRESSURES FOR ALUMINUM SCREEN ENCLOSURE FRAMING WITH AN IMPORTANCE FACTOR OF 0.77[a, b, c]

LOAD CASE	WALL	Basic Wind Speed (mph)											
		100		110		120		130		140		150	
		Exposure Category Design Pressure (psf)											
		C	B	C	B	C	B	C	B	C	B	C	B
A[d]	Windward and leeward walls (flow thru) and windward wall (nonflow thru) $L/W = 0\text{-}1$	12	8	14	10	17	12	19	14	23	16	26	18
A[d]	Windward and leeward walls (flow thru) and windward wall (nonflow thru) $L/W = 2$	13	9	16	11	19	14	22	16	26	18	30	21
B[e]	Windward: Nongable roof	16	12	20	14	24	17	28	20	32	23	37	26
B[e]	Windward: Gable roof	22	16	27	19	32	23	38	27	44	31	50	36
	ROOF												
All[f]	Roof-screen	4	3	5	4	6	4	7	5	8	6	9	7
All[f]	Roof-solid	12	9	15	11	18	13	21	15	24	17	28	20

For SI: 1 mile per hour = 0.44 m/s, 1 pound per square foot = 0.0479 kPa, 1 foot = 304.8 mm.

a. Values have been reduced for 0.77 importance factor in accordance with Section AH106.4.3.

b. Minimum design pressure shall be 10 psf in accordance with Section AH106.4.1.

c. Loads are applicable to screen enclosures with a mean roof height of 30 feet or less. For screen enclosures of different heights, the pressures given shall be adjusted by multiplying the table pressure by the adjustment factor given in Table AH106.4(2).

d. For Load Case A flow thru condition, the pressure given shall be applied simultaneously to both the upwind and downwind screen walls acting in the same direction as the wind. The structure shall also be analyzed for wind coming from the opposite direction. For the nonflow thru condition, the screen enclosure wall shall be analyzed for the load applied acting toward the interior of the enclosure.

e. For Load Case B, the table pressure multiplied by the projected frontal area of the screen enclosure is the total drag force, including drag on screen surfaces parallel to the wind, which must be transmitted to the ground. Use Load Case A for members directly supporting the screen surface perpendicular to the wind. Load Case B loads shall be applied only to structural members which carry wind loads from more than one surface.

f. The roof structure shall be analyzed for the pressure given occurring both upward and downward.

AH106.4.3 Importance factor. The wind factor for screen enclosures shall be 0.77 in accordance with Section 6.5.5 of ASCE 7.

AH106.4.4 Roof live load. The minimum roof live load shall be 10 psf (0.479 kN/m^2).

AH106.5 Footings. In areas with a frost line depth of zero, a screen enclosure shall be permitted to be supported on a concrete slab-on-grade without footings, provided the slab conforms to the provisions of Section R506, is not less than $3^1/_2$ inches (89 mm) thick and the columns do not support loads in excess of 750 pounds (3.36 kN) per column.

TABLE AH106.4(2)
HEIGHT ADJUSTMENT FACTORS

MEAN	EXPOSURE	
Roof Height (feet)	B	C
15	1	0.86
20	1	0.92
25	1	0.96
30	1	1.00
35	1.05	1.03
40	1.09	1.06
45	1.12	1.09
50	1.16	1.11
55	1.19	1.14
60	1.22	1.16

For SI: 1 foot = 304.8 mm.

CALIFORNIA RESIDENTIAL CODE – MATRIX ADOPTION TABLE
APPENDIX I – PRIVATE SEWAGE DISPOSAL

(Matrix Adoption Tables are non-regulatory, intended only as an aid to the user.
See Chapter 1 for state agency authority and building applications.)

Adopting agency	BSC	SFM	HCD			DSA		OSHPD				BSCC	DHS	AGR	DWR	CEC	CA	SL	SLC
			1	2	1/AC	AC	SS	1	2	3	4								
Adopt entire chapter																			
Adopt entire chapter as amended (amended sections listed below)																			
Adopt only those sections that are listed below																			
[California Code of Regulations, Title 19, Division 1]																			
Chapter / Section																			

* The California Code of Regulations (CCR), Title 19, Division 1 provisions that are found in the *California Fire Code* are a reprint from the current CCR, Title 19, Division 1 text for the code user's convenience only. The scope, applicability and appeals procedures of CCR, Title 19, Division I remain the same.

APPENDIX I

PRIVATE SEWAGE DISPOSAL

(The provisions contained in this appendix are not mandatory unless specifically referenced in the adopting ordinance.)

SECTION AI101
GENERAL

AI101.1 Scope. Private sewage disposal systems shall conform to the *International Private Sewage Disposal Code.*

CALIFORNIA RESIDENTIAL CODE – MATRIX ADOPTION TABLE
APPENDIX J – EXISTING BUILDINGS AND STRUCTURES

(Matrix Adoption Tables are non-regulatory, intended only as an aid to the user.
See Chapter 1 for state agency authority and building applications.)

Adopting agency	BSC	SFM	HCD			DSA		OSHPD				BSCC	DHS	AGR	DWR	CEC	CA	SL	SLC
			1	2	1/AC	AC	SS	1	2	3	4								
Adopt entire chapter																			
Adopt entire chapter as amended (amended sections listed below)																			
Adopt only those sections that are listed below																			
[California Code of Regulations, Title 19, Division 1]																			
Chapter / Section																			

* The California Code of Regulations (CCR), Title 19, Division 1 provisions that are found in the *California Fire Code* are a reprint from the current CCR, Title 19, Division 1 text for the code user's convenience only. The scope, applicability and appeals procedures of CCR, Title 19, Division I remain the same.

APPENDIX J

EXISTING BUILDINGS AND STRUCTURES

(The provisions contained in this appendix are not mandatory unless specifically referenced in the adopting ordinance.)

SECTION AJ101
PURPOSE AND INTENT

AJ101.1 General. The purpose of these provisions is to encourage the continued use or reuse of legally existing buildings and structures. These provisions are intended to permit work in existing buildings that is consistent with the purpose of this code. Compliance with these provisions shall be deemed to meet the requirements of this code.

AJ101.2 Classification of work. For purposes of this appendix, all work in existing buildings shall be classified into the categories of repair, renovation, alteration and reconstruction. Specific requirements are established for each category of work in these provisions.

AJ101.3 Multiple categories of work. Work of more than one category may be part of a single work project. All related work permitted within a 12-month period shall be considered a single work project. Where a project includes one category of work in one building area and another category of work in a separate and unrelated area of the building, each project area shall comply with the requirements of the respective category of work. Where a project with more than one category of work is performed in the same area or in related areas of the building, the project shall comply with the requirements of the more stringent category of work.

SECTION AJ102
COMPLIANCE

AJ102.1 General. Regardless of the category of work being performed, the work shall not cause the structure to become unsafe or adversely affect the performance of the building; shall not cause an existing mechanical or plumbing system to become unsafe, hazardous, insanitary or overloaded; and unless expressly permitted by these provisions, shall not make the building any less compliant with this code or to any previously approved alternative arrangements than it was before the work was undertaken.

AJ102.2 Requirements by category of work. Repairs shall conform to the requirements of Section AJ301. Renovations shall conform to the requirements of Section AJ401. Alterations shall conform to the requirements of Section AJ501 and the requirements for renovations. Reconstructions shall conform to the requirements of Section AJ601 and the requirements for alterations and renovations.

AJ102.3 Smoke detectors. Regardless of the category of work, smoke detectors shall be provided where required by Section R314.3.1.

AJ102.4 Replacement windows. Regardless of the category of work, when an existing window, including the sash and glazed portion, is replaced, the replacement window shall comply with the requirements of Chapter 11.

AJ102.5 Flood hazard areas. Work performed in existing buildings located in a flood hazard area as established by Table R301.2(1) shall be subject to the provisions of Section R105.3.1.1.

AJ102.6 Equivalent alternatives. These provisions are not intended to prevent the use of any alternative material, alternative design or alternative method of construction not specifically prescribed herein, provided any alternative has been deemed to be equivalent and its use authorized by the building official.

AJ102.7 Other alternatives. Where compliance with these provisions or with this code as required by these provisions is technically infeasible or would impose disproportionate costs because of structural, construction or dimensional difficulties, other alternatives may be accepted by the building official. These alternatives may include materials, design features and/or operational features.

AJ102.8 More restrictive requirements. Buildings or systems in compliance with the requirements of this code for new construction shall not be required to comply with any more restrictive requirement of these provisions.

AJ102.9 Features exceeding code requirements. Elements, components and systems of existing buildings with features that exceed the requirements of this code for new construction, and are not otherwise required as part of approved alternative arrangements or deemed by the building official to be required to balance other building elements not complying with this code for new construction, shall not be prevented by these provisions from being modified as long as they remain in compliance with the applicable requirements for new construction.

SECTION AJ103
PRELIMINARY MEETING

AJ103.1 General. If a building permit is required at the request of the prospective permit applicant, the building official or his designee shall meet with the prospective applicant to discuss plans for any proposed work under these provisions prior to the application for the permit. The purpose of this preliminary meeting is for the building official to gain an understanding of the prospective applicant's intentions for the proposed work, and to determine, together with the prospective applicant, the specific applicability of these provisions.

SECTION AJ104
EVALUATION OF AN EXISTING BUILDING

AJ104.1 General. The building official may require an existing building to be investigated and evaluated by a registered design professional in the case of proposed reconstruction of any portion of a building. The evaluation shall determine the existence of any potential nonconformities to these provisions, and shall provide a basis for determining the impact of the proposed changes on the performance of the building. The evaluation shall use the following sources of information, as applicable:

1. Available documentation of the existing building.
    1.1. Field surveys.
    1.2. Tests (nondestructive and destructive).
    1.3. Laboratory analysis.

Exception: Detached one- or two-family dwellings that are not irregular buildings under Section R301.2.2.2.5 and are not undergoing an extensive reconstruction shall not be required to be evaluated.

SECTION AJ105
PERMIT

AJ105.1 Identification of work area. The work area shall be clearly identified on all permits issued under these provisions.

SECTION AJ201
DEFINITIONS

AJ201.1 General. For purposes of this appendix, the terms used are defined as follows.

ALTERATION. The reconfiguration of any space; the addition or elimination of any door or window; the reconfiguration or extension of any system; or the installation of any additional equipment.

CATEGORIES OF WORK. The nature and extent of construction work undertaken in an existing building. The categories of work covered in this appendix, listed in increasing order of stringency of requirements, are repair, renovation, alteration and reconstruction.

DANGEROUS. Where the stresses in any member; the condition of the building, or any of its components or elements or attachments; or other condition that results in an overload exceeding 150 percent of the stress allowed for the member or material in this code.

EQUIPMENT OR FIXTURE. Any plumbing, heating, electrical, ventilating, air-conditioning, refrigerating and fire protection equipment; and elevators, dumb waiters, boilers, pressure vessels, and other mechanical facilities or installations that are related to building services.

LOAD-BEARING ELEMENT. Any column, girder, beam, joist, truss, rafter, wall, floor or roof sheathing that supports any vertical load in addition to its own weight, and/or any lateral load.

MATERIALS AND METHODS REQUIREMENTS. Those requirements in this code that specify material standards; details of installation and connection; joints; penetrations; and continuity of any element, component or system in the building. The required quantity, fire resistance, flame spread, acoustic or thermal performance, or other performance attribute is specifically excluded from materials and methods requirements.

RECONSTRUCTION. The reconfiguration of a space that affects an exit, a renovation and/or alteration when the work area is not permitted to be occupied because existing means-of-egress and fire protection systems, or their equivalent, are not in place or continuously maintained; and/or there are extensive alterations as defined in Section AJ501.3.

REHABILITATION. Any repair, renovation, alteration or reconstruction work undertaken in an existing building.

RENOVATION. The change, strengthening or addition of load-bearing elements; and/or the refinishing, replacement, bracing, strengthening, upgrading or extensive repair of existing materials, elements, components, equipment and/or fixtures. Renovation involves no reconfiguration of spaces. Interior and exterior painting are not considered refinishing for purposes of this definition, and are not renovation.

REPAIR. The patching, restoration and/or minor replacement of materials, elements, components, equipment and/or fixtures for the purposes of maintaining those materials, elements, components, equipment and/or fixtures in good or sound condition.

WORK AREA. That portion of a building affected by any renovation, alteration or reconstruction work as initially intended by the owner and indicated as such in the permit. Work area excludes other portions of the building where incidental work entailed by the intended work must be performed, and portions of the building where work not initially intended by the owner is specifically required by these provisions for a renovation, alteration or reconstruction.

SECTION AJ301
REPAIRS

AJ301.1 Materials. Except as otherwise required herein, work shall be done using like materials or materials permitted by this code for new construction.

AJ301.1.1 Hazardous materials. Hazardous materials no longer permitted, such as asbestos and lead-based paint, shall not be used.

AJ301.1.2 Plumbing materials and supplies. The following plumbing materials and supplies shall not be used:

1. All-purpose solvent cement, unless listed for the specific application;
2. Flexible traps and tailpieces, unless listed for the specific application; and
3. Solder having more than 0.2 percent lead in the repair of potable water systems.

AJ301.2 Water closets. When any water closet is replaced with a newly manufactured water closet, the replacement water closet shall comply with the requirements of Section P2903.2.

AJ301.3 Safety glazing. Replacement glazing in hazardous locations shall comply with the safety glazing requirements of Section R308.1.

AJ301.4 Electrical. Repair or replacement of existing electrical wiring and equipment undergoing repair with like material shall be permitted.

Exceptions:

1. Replacement of electrical receptacles shall comply with the requirements of Chapters 34 through 43.
2. Plug fuses of the Edison-base type shall be used for replacements only where there is no evidence of overfusing or tampering in accordance with the applicable requirements of Chapters 34 through 43.
3. For replacement of nongrounding-type receptacles with grounding-type receptacles and for branch circuits that do not have an equipment grounding conductor in the branch circuitry, the grounding conductor of a grounding-type receptacle outlet shall be permitted to be grounded to any accessible point on the grounding electrode system, or to any accessible point on the grounding electrode conductor, as allowed and described in Chapters 34 through 43.

SECTION AJ401
RENOVATIONS

AJ401.1 Materials and methods. The work shall comply with the materials and methods requirements of this code.

AJ401.2 Door and window dimensions. Minor reductions in the clear opening dimensions of replacement doors and windows that result from the use of different materials shall be allowed, whether or not they are permitted by this code.

AJ401.3 Interior finish. Wood paneling and textile wall coverings used as an interior finish shall comply with the flame spread requirements of Section R302.9.

AJ401.4 Structural. Unreinforced masonry buildings located in Seismic Design Category D_2 or E shall have parapet bracing and wall anchors installed at the roofline whenever a reroofing permit is issued. Such parapet bracing and wall anchors shall be of an approved design.

SECTION AJ501
ALTERATIONS

AJ501.1 Newly constructed elements. Newly constructed elements, components and systems shall comply with the requirements of this code.

Exceptions:

1. Openable windows may be added without requiring compliance with the light and ventilation requirements of Section R303.
2. Newly installed electrical equipment shall comply with the requirements of Section AJ501.5.

AJ501.2 Nonconformities. The work shall not increase the extent of noncompliance with the requirements of Section AJ601, or create nonconformity to those requirements which did not previously exist.

AJ501.3 Extensive alterations. When the total area of all the work areas included in an alteration exceeds 50 percent of the area of the dwelling unit, the work shall be considered a reconstruction and shall comply with the requirements of these provisions for reconstruction work.

Exception: Work areas in which the alteration work is exclusively plumbing, mechanical or electrical shall not be included in the computation of the total area of all work areas.

AJ501.4 Structural. The minimum design loads for the structure shall be the loads applicable at the time the building was constructed, provided that no dangerous condition is created. Structural elements that are uncovered during the course of the alteration and that are found to be unsound or dangerous shall be made to comply with the applicable requirements of this code.

AJ501.5 Electrical equipment and wiring.

AJ501.5.1 Materials and methods. Newly installed electrical equipment and wiring relating to work done in any

work area shall comply with the materials and methods requirements of Chapters 34 through 43.

Exception: Electrical equipment and wiring in newly installed partitions and ceilings shall comply with all the applicable requirements of Chapters 34 through 43.

AJ501.5.2 Electrical service. Service to the dwelling unit shall be a minimum of 100 ampere, three-wire capacity and service equipment shall be dead front having no live parts exposed that could allow accidental contact. Type "S" fuses shall be installed when fused equipment is used.

Exception: Existing service of 60 ampere, three-wire capacity, and feeders of 30 ampere or larger two- or three-wire capacity shall be accepted if adequate for the electrical load being served.

AJ501.5.3 Additional electrical requirements. When the work area includes any of the following areas within a dwelling unit, the requirements of Sections AJ501.5.3.1 through AJ501.5.3.5 shall apply.

AJ501.5.3.1 Enclosed areas. Enclosed areas other than closets, kitchens, basements, garages, hallways, laundry areas and bathrooms shall have a minimum of two duplex receptacle outlets, or one duplex receptacle outlet and one ceiling- or wall-type lighting outlet.

AJ501.5.3.2 Kitchen and laundry areas. Kitchen areas shall have a minimum of two duplex receptacle outlets. Laundry areas shall have a minimum of one duplex receptacle outlet located near the laundry equipment and installed on an independent circuit.

AJ501.5.3.3 Ground-fault circuit-interruption. Ground-fault circuit-interruption shall be provided on newly installed receptacle outlets if required by Chapters 34 through 43.

AJ501.5.3.4 Lighting outlets. At least one lighting outlet shall be provided in every bathroom, hallway, stairway, attached garage and detached garage with electric power to illuminate outdoor entrances and exits, and in utility rooms and basements where these spaces are used for storage or contain equipment requiring service.

AJ501.5.3.5 Clearance. Clearance for electrical service equipment shall be provided in accordance with Chapters 34 through 43.

AJ501.6 Ventilation. All reconfigured spaces intended for occupancy and all spaces converted to habitable or occupiable space in any work area shall be provided with ventilation in accordance with Section R303.

AJ501.7 Ceiling height. Habitable spaces created in existing basements shall have ceiling heights of not less than 6 feet, 8 inches (2032 mm). Obstructions may project to within 6 feet, 4 inches (1930 mm) of the basement floor. Existing finished ceiling heights in nonhabitable spaces in basements shall not be reduced.

AJ501.8 Stairs.

AJ501.8.1 Stair width. Existing basement stairs and handrails not otherwise being altered or modified shall be permitted to maintain their current clear width at, above and below existing handrails.

AJ501.8.2 Stair headroom. Headroom height on existing basement stairs being altered or modified shall not be reduced below the existing stairway finished headroom. Existing basement stairs not otherwise being altered shall be permitted to maintain the current finished headroom.

AJ501.8.3 Stair landing. Landings serving existing basement stairs being altered or modified shall not be reduced below the existing stairway landing depth and width. Existing basement stairs not otherwise being altered shall be permitted to maintain the current landing depth and width.

SECTION AJ601
RECONSTRUCTION

AJ601.1 Stairways, handrails and guards.

AJ601.1.1 Stairways. Stairways within the work area shall be provided with illumination in accordance with Section R303.6.

AJ601.1.2 Handrails. Every required exit stairway that has four or more risers, is part of the means of egress for any work area, and is not provided with at least one handrail, or in which the existing handrails are judged to be in danger of collapsing, shall be provided with handrails designed and installed in accordance with Section R311 for the full length of the run of steps on at least one side.

AJ601.1.3 Guards. Every open portion of a stair, landing or balcony that is more than 30 inches (762 mm) above the floor or grade below, is part of the egress path for any work area, and does not have guards, or in which the existing guards are judged to be in danger of collapsing, shall be provided with guards designed and installed in accordance with Section R312.

AJ601.2 Wall and ceiling finish. The interior finish of walls and ceilings in any work area shall comply with the requirements of Section R302.9. Existing interior finish materials that do not comply with those requirements shall be removed or shall be treated with an approved fire-retardant coating in accordance with the manufacturer's instructions to secure compliance with the requirements of this section.

AJ601.3 Separation walls. Where the work area is in an attached dwelling unit, walls separating dwelling units that are not continuous from the foundation to the underside of the roof sheathing shall be constructed to provide a continuous fire separation using construction materials consistent with the existing wall or complying with the requirements for new structures. Performance of work shall be required only on the side of the wall of the dwelling unit that is part of the work area.

AJ601.4 Ceiling height. Habitable spaces created in existing basements shall be permitted to have ceiling heights of not less than 6 feet, 8 inches (2032 mm). Obstructions may project to within 6 feet, 4 inches (1930 mm) of the basement floor. Existing finished ceiling heights in nonhabitable spaces in basements shall not be reduced.

CALIFORNIA RESIDENTIAL CODE – MATRIX ADOPTION TABLE
APPENDIX K – SOUND TRANSMISSION

(Matrix Adoption Tables are non-regulatory, intended only as an aid to the user.
See Chapter 1 for state agency authority and building applications.)

Adopting agency	BSC	SFM	HCD			DSA		OSHPD				BSCC	DHS	AGR	DWR	CEC	CA	SL	SLC
			1	2	1/AC	AC	SS	1	2	3	4								
Adopt entire chapter																			
Adopt entire chapter as amended (amended sections listed below)																			
Adopt only those sections that are listed below																			
[California Code of Regulations, Title 19, Division 1]																			
Chapter / Section																			

* The California Code of Regulations (CCR), Title 19, Division 1 provisions that are found in the *California Fire Code* are a reprint from the current CCR, Title 19, Division 1 text for the code user's convenience only. The scope, applicability and appeals procedures of CCR, Title 19, Division I remain the same.

APPENDIX K

SOUND TRANSMISSION

(The provisions contained in this appendix are not mandatory unless specifically referenced in the adopting ordinance. Note: See Section 1207 "Sound Transmission" of the California Building Code, Title 24, Part 2, for requirements applicable to structures in this code.)

SECTION AK101
GENERAL

AK101.1 General. Wall and floor-ceiling assemblies separating dwelling units, including those separating adjacent townhouse units, shall provide air-borne sound insulation for walls, and both air-borne and impact sound insulation for floor-ceiling assemblies.

SECTION AK102
AIR-BORNE SOUND

AK102.1 General. Air-borne sound insulation for wall and floor-ceiling assemblies shall meet a sound transmission class (STC) rating of 45 when tested in accordance with ASTM E 90. Penetrations or openings in construction assemblies for piping; electrical devices; recessed cabinets; bathtubs; soffits; or heating, ventilating or exhaust ducts shall be sealed, lined, insulated or otherwise treated to maintain the required ratings. Dwelling unit entrance doors, which share a common space, shall be tight fitting to the frame and sill.

AK102.1.1 Masonry. The sound transmission class of concrete masonry and clay masonry assemblies shall be calculated in accordance with TMS 0302 or determined through testing in accordance with ASTM E 90.

SECTION AK103
STRUCTURAL-BORNE SOUND

AK103.1 General. Floor/ceiling assemblies between dwelling units, or between a dwelling unit and a public or service area within a structure, shall have an impact insulation class (IIC) rating of not less than 45 when tested in accordance with ASTM E 492.

SECTION AK104
REFERENCED STANDARDS

ASTM

ASTM E 90—04 Test Method for Laboratory Measurement of Air-borne Sound Transmission Loss of Building Partitions and Elements AK102

ASTM E 492—04 Specification for Laboratory Measurement of Impact Sound Transmission through Floor-ceiling Assemblies Using the Tapping Machine. AK103

The Masonry Society

TMS 0302—07 Standard for Determining the Sound Transmission Class Rating for Masonry Walls AK102.1.1

CALIFORNIA RESIDENTIAL CODE – MATRIX ADOPTION TABLE
APPENDIX L – PERMIT FEES

(Matrix Adoption Tables are non-regulatory, intended only as an aid to the user.
See Chapter 1 for state agency authority and building applications.)

Adopting agency	BSC	SFM	HCD			DSA		OSHPD				BSCC	DHS	AGR	DWR	CEC	CA	SL	SLC
			1	2	1/AC	AC	SS	1	2	3	4								
Adopt entire chapter																			
Adopt entire chapter as amended (amended sections listed below)																			
Adopt only those sections that are listed below																			
[California Code of Regulations, Title 19, Division 1]																			
Chapter / Section																			

* The California Code of Regulations (CCR), Title 19, Division 1 provisions that are found in the *California Fire Code* are a reprint from the current CCR, Title 19, Division 1 text for the code user's convenience only. The scope, applicability and appeals procedures of CCR, Title 19, Division I remain the same.

APPENDIX L

PERMIT FEES

(The provisions contained in this appendix are not mandatory unless specifically referenced in the adopting ordinance.)

TOTAL VALUATION	FEE
$1 to $ 500	$24
$501 to $2,000	$24 for the first $500; plus $3 for each additional $100 or fraction thereof, up to and including $2,000
$2,001 to $40,000	$69 for the first $2,000; plus $11 for each additional $1,000 or fraction thereof, up to and including $40,000
$40,001 to $100,000	$487 for the first $40,000; plus $9 for each additional $1,000 or fraction thereof, up to and including $100,000
$100,001 to $500,000	$1,027 for the first $100,000; plus $7 for each additional $1,000 or fraction thereof, up to and including $500,000
$500,001 to $1,000,000	$3,827 for the first $500,000; plus $5 for each additional $1,000 or fraction thereof, up to and including $1,000,000
$1,000,001 to $5,000,000	$6,327 for the first $1,000,000; plus $3 for each additional $1,000 or fraction thereof, up to and including $5,000,000
$5,000,001 and over	$18,327 for the first $5,000,000; plus $1 for each additional $1,000 or fraction thereof

CALIFORNIA RESIDENTIAL CODE – MATRIX ADOPTION TABLE
APPENDIX M – HOME DAY CARE—R-3 OCCUPANCY

(Matrix Adoption Tables are non-regulatory, intended only as an aid to the user.
See Chapter 1 for state agency authority and building applications.)

Adopting agency	BSC	SFM	HCD			DSA		OSHPD				BSCC	DHS	AGR	DWR	CEC	CA	SL	SLC
			1	2	1/AC	AC	SS	1	2	3	4								
Adopt entire chapter																			
Adopt entire chapter as amended (amended sections listed below)																			
Adopt only those sections that are listed below																			
[California Code of Regulations, Title 19, Division 1]																			
Chapter / Section																			

* The California Code of Regulations (CCR), Title 19, Division 1 provisions that are found in the *California Fire Code* are a reprint from the current CCR, Title 19, Division 1 text for the code user's convenience only. The scope, applicability and appeals procedures of CCR, Title 19, Division I remain the same.

APPENDIX M

HOME DAY CARE—R-3 OCCUPANCY

See Health and Safety Code Sections 1597.45, 1597.46, 1597.54 and 13143 regarding small family day-care homes and large family day-care homes. Provisions for day-care facilities shall be in accordance with Section 1.1.3.1 for classification, R326 for large family day-care, R325 for Group R-3.1 or the California Building Code. This appendix is not applicable in California.

CALIFORNIA RESIDENTIAL CODE – MATRIX ADOPTION TABLE
APPENDIX N – VENTING METHODS

(Matrix Adoption Tables are non-regulatory, intended only as an aid to the user.
See Chapter 1 for state agency authority and building applications.)

Adopting agency	BSC	SFM	HCD			DSA		OSHPD				BSCC	DHS	AGR	DWR	CEC	CA	SL	SLC
			1	2	1/AC	AC	SS	1	2	3	4								
Adopt entire chapter																			
Adopt entire chapter as amended (amended sections listed below)																			
Adopt only those sections that are listed below																			
[California Code of Regulations, Title 19, Division 1]																			
Chapter / Section																			

* The California Code of Regulations (CCR), Title 19, Division 1 provisions that are found in the *California Fire Code* are a reprint from the current CCR, Title 19, Division 1 text for the code user's convenience only. The scope, applicability and appeals procedures of CCR, Title 19, Division I remain the same.

APPENDIX N

VENTING METHODS

(This appendix is informative and is not part of the code. This appendix provides examples of various of venting methods.)

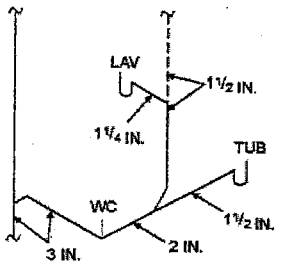

A. TYPICAL SINGLE-BATH ARRANGEMENT

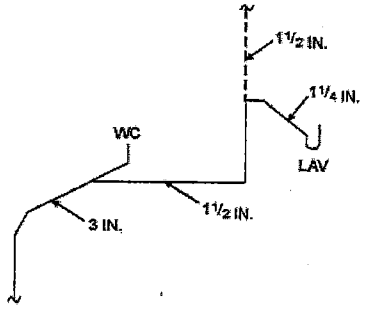

B. TYPICAL POWDER ROOM

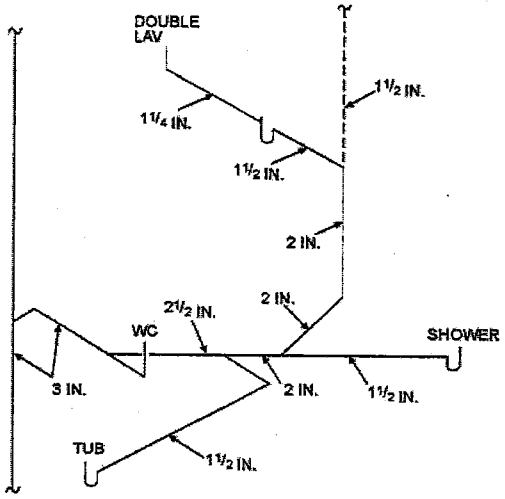

C. MORE ELABORATE SINGLE-BATH ARRANGEMENT

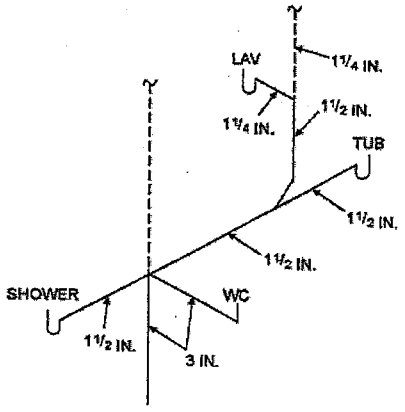

D. COMBINATION WET AND STACK VENTING WITH STACK FITTING

For SI: 1 inch = 25.4 mm.

FIGURE N1
TYPICAL SINGLE-BATH WET-VENT ARRANGEMENTS

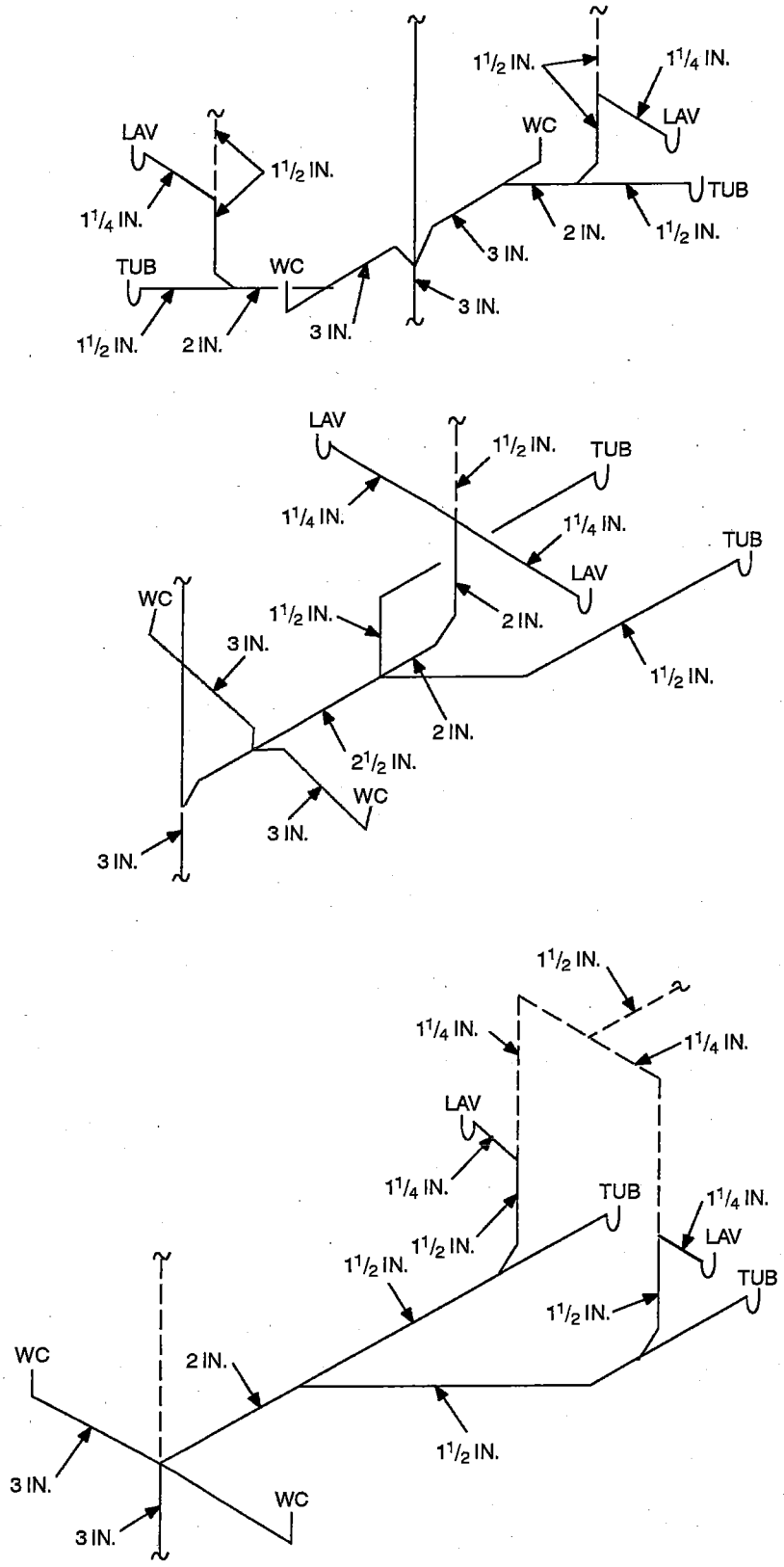

For SI: 1 inch = 25.4 mm.

FIGURE N2
TYPICAL DOUBLE-BATH WET-VENT ARRANGEMENTS

4298

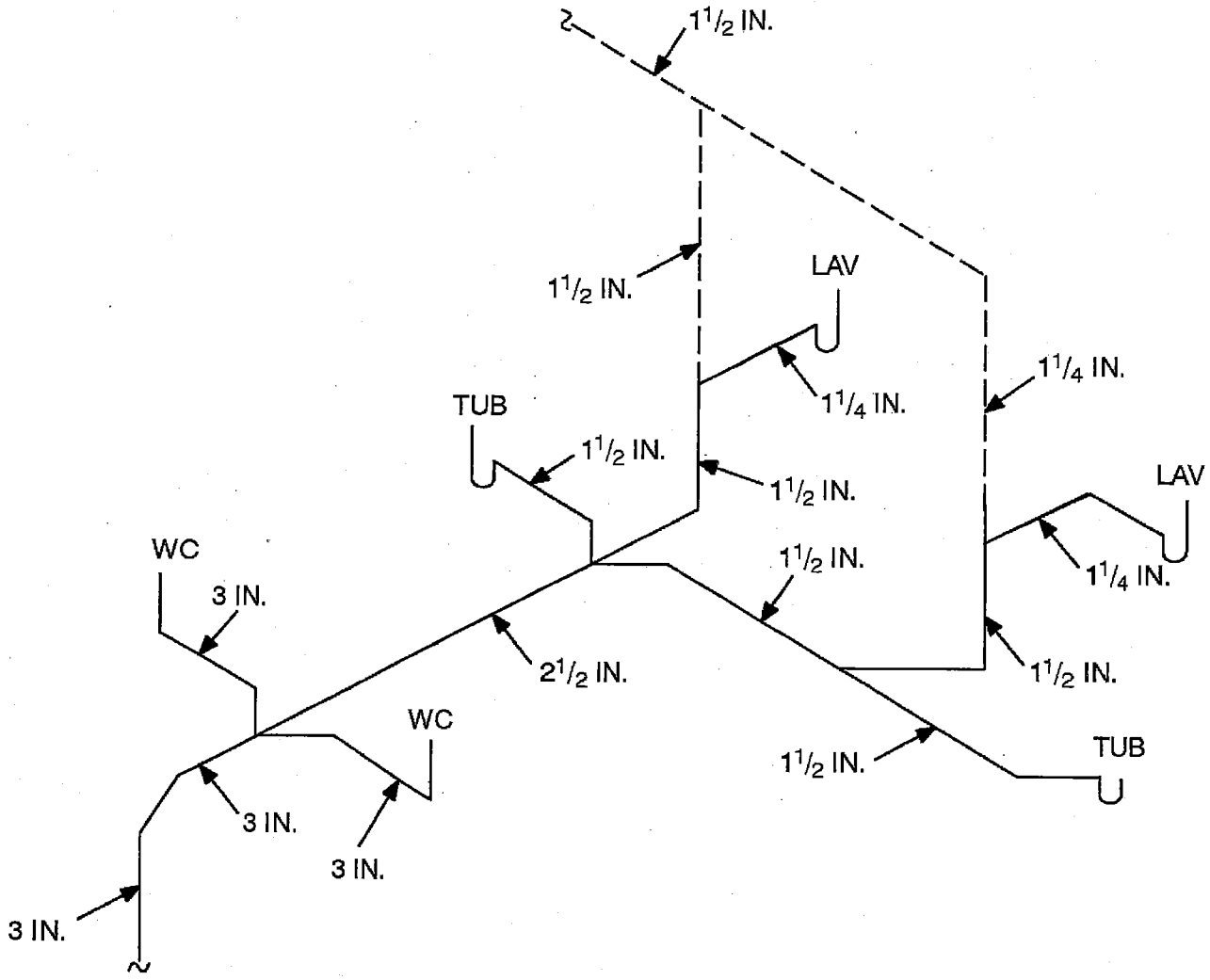

For SI: 1 inch = 25.4 mm.

FIGURE N3
TYPICAL HORIZONTAL WET VENTING

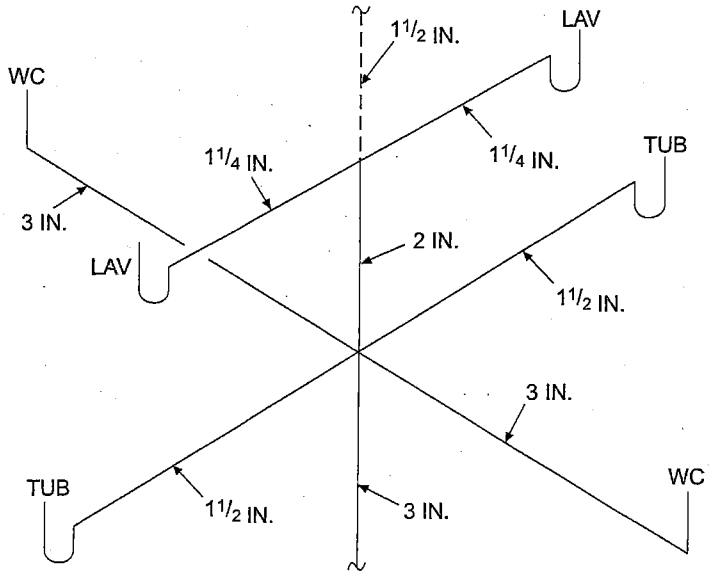

A. VERTICAL WET VENTING

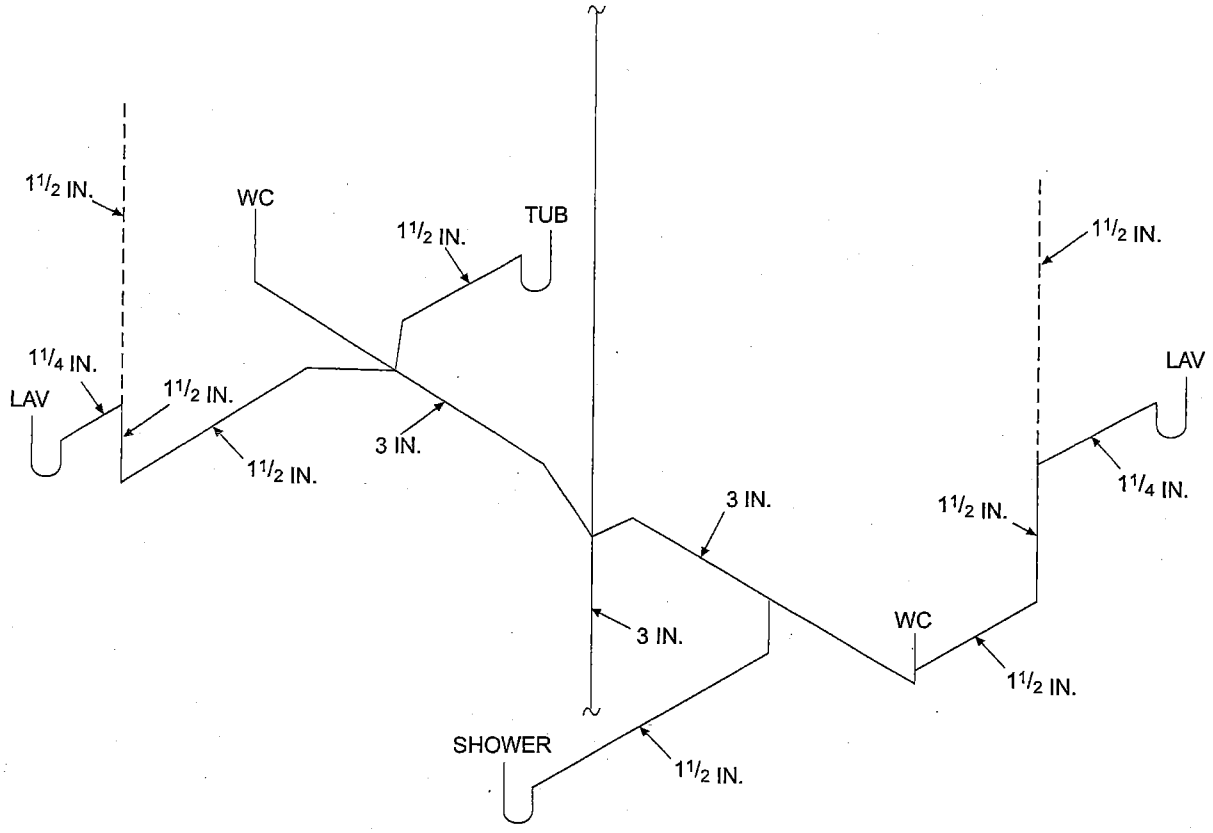

B. HORIZONTAL WET VENTING

For SI: 1 inch = 25.4 mm.

FIGURE N4
TYPICAL METHODS OF WET VENTING

4300

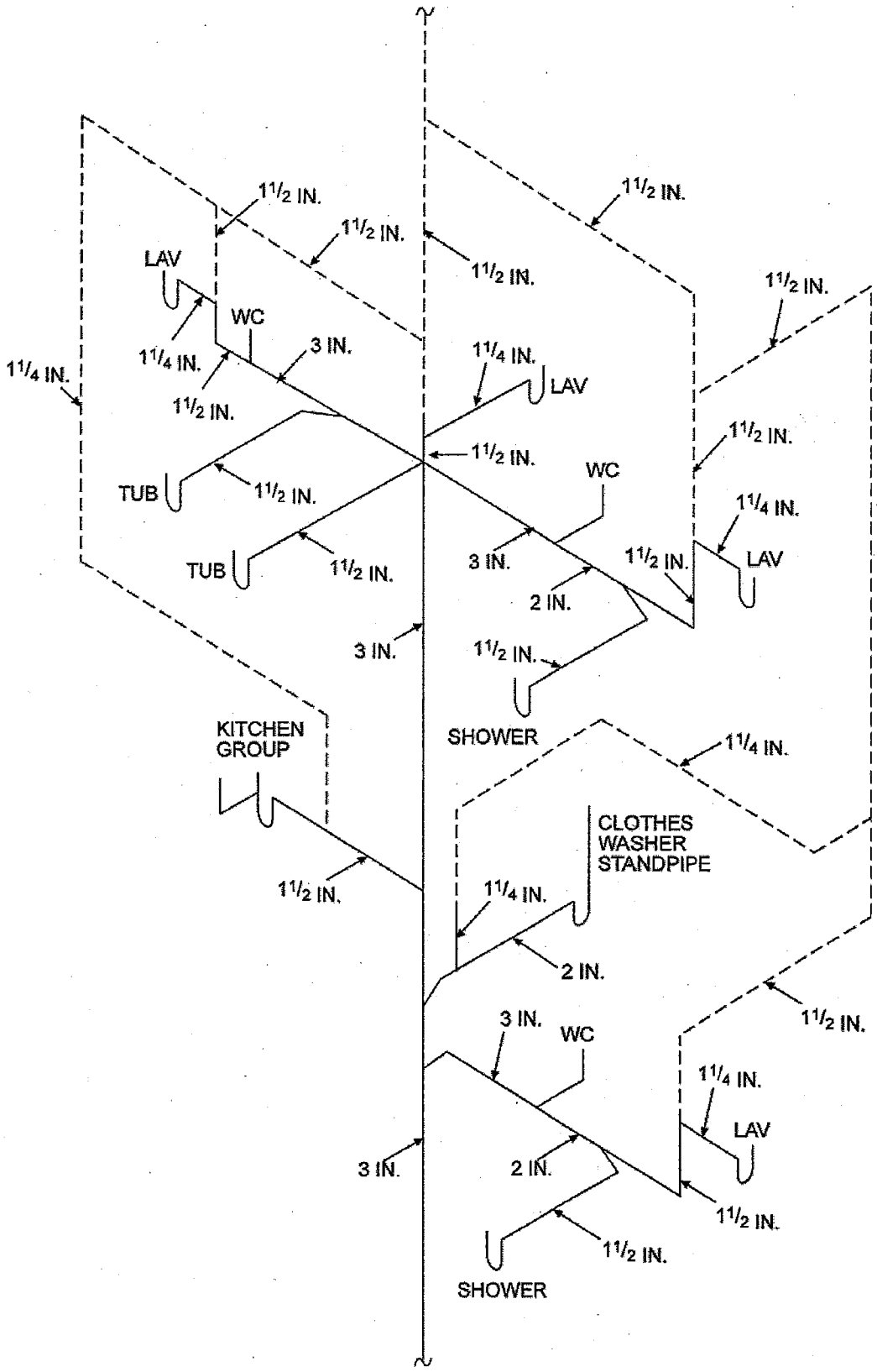

For SI: 1 inch = 25.4 mm.

FIGURE N5
SINGLE STACK SYSTEM FOR A TWO-STORY DWELLING

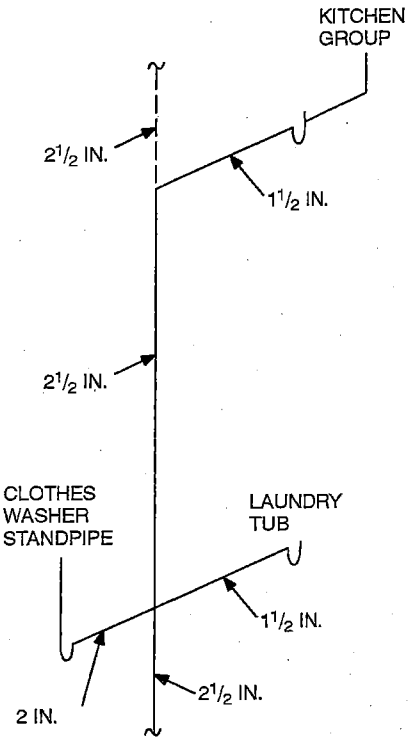

For SI: 1 inch = 25.4 mm.

FIGURE N6
WASTE STACK VENTING

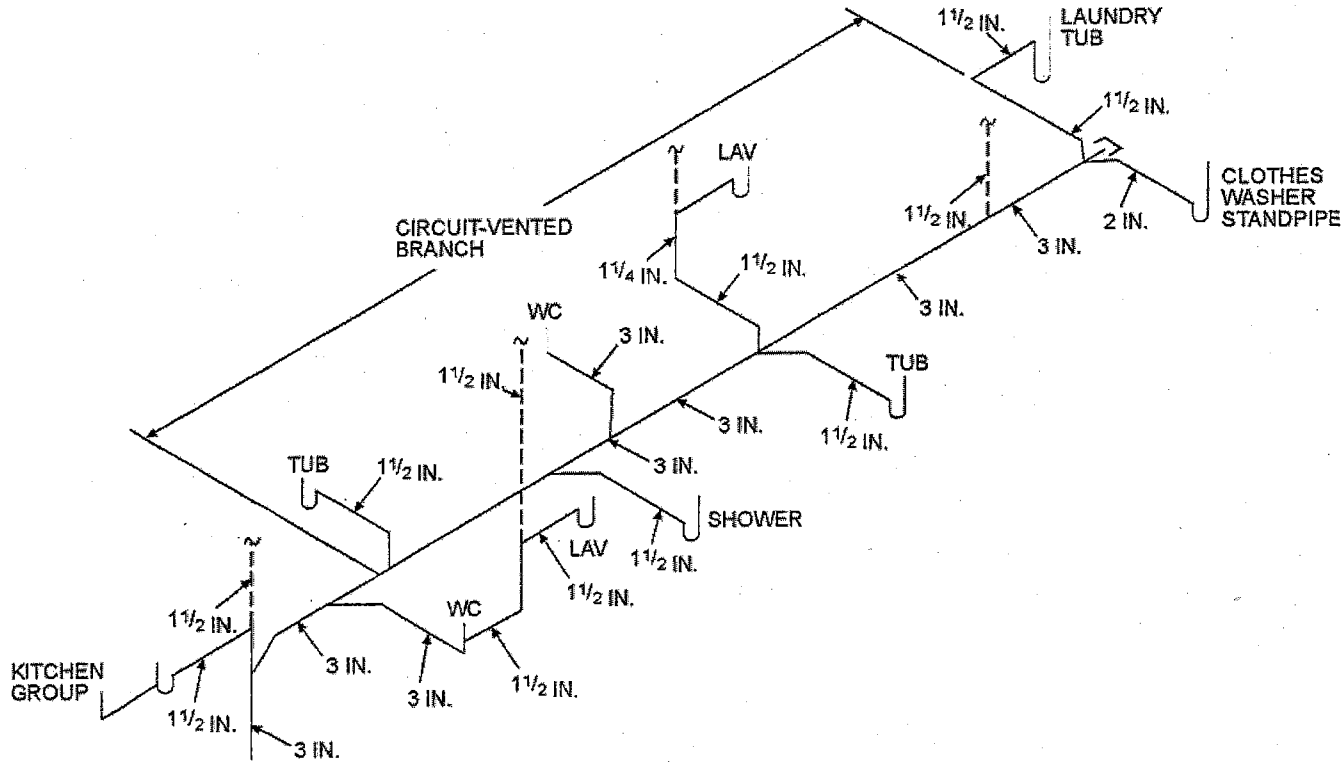

For SI: 1 inch = 25.4 mm.

FIGURE N7
CIRCUIT VENT WITH ADDITIONAL NONCIRCUIT VENTED BRANCH

CALIFORNIA RESIDENTIAL CODE – MATRIX ADOPTION TABLE
APPENDIX O – AUTOMATIC VEHICULAR GATES

(Matrix Adoption Tables are non-regulatory, intended only as an aid to the user.
See Chapter 1 for state agency authority and building applications.)

Adopting agency	BSC	SFM	HCD			DSA		OSHPD				BSCC	DHS	AGR	DWR	CEC	CA	SL	SLC
			1	2	1/AC	AC	SS	1	2	3	4								
Adopt entire chapter																			
Adopt entire chapter as amended (amended sections listed below)																			
Adopt only those sections that are listed below																			
[California Code of Regulations, Title 19, Division 1]																			
Chapter / Section																			

* The California Code of Regulations (CCR), Title 19, Division 1 provisions that are found in the *California Fire Code* are a reprint from the current CCR, Title 19, Division 1 text for the code user's convenience only. The scope, applicability and appeals procedures of CCR, Title 19, Division I remain the same.

APPENDIX O

AUTOMATIC VEHICULAR GATES

(The provisions contained in this appendix are not mandatory unless specifically referenced in the adopting ordinance.)

SECTION AO101
GENERAL

AO101.1 General. The provisions of this appendix shall control the design and construction of automatic vehicular gates installed on the lot of a one- or two-family dwelling.

SECTION AO102
DEFINITION

AO102.1 General. For the purposes of these requirements, the terms used shall be defined as follows and as set forth in Chapter 2.

VEHICULAR GATE. A gate that is intended for use at a vehicular entrance or exit to the lot of a one- or two-family dwelling, and that is not intended for use by pedestrian traffic.

SECTION AO103
AUTOMATIC VEHICULAR GATES

AO103.1 Vehicular gates intended for automation. Vehicular gates intended for automation shall be designed, constructed and installed to comply with the requirements of ASTM F 2200.

AO103.2 Vehicular gate openers. Vehicular gate openers, when provided, shall be listed in accordance with UL 325.

CALIFORNIA RESIDENTIAL CODE – MATRIX ADOPTION TABLE
APPENDIX P – SIZING OF WATER PIPING SYSTEM

(Matrix Adoption Tables are non-regulatory, intended only as an aid to the user.
See Chapter 1 for state agency authority and building applications.)

Adopting agency	BSC	SFM	HCD			DSA		OSHPD				BSCC	DHS	AGR	DWR	CEC	CA	SL	SLC
			1	2	1/AC	AC	SS	1	2	3	4								
Adopt entire chapter																			
Adopt entire chapter as amended (amended sections listed below)																			
Adopt only those sections that are listed below																			
[California Code of Regulations, Title 19, Division 1]																			
Chapter / Section																			

* The California Code of Regulations (CCR), Title 19, Division 1 provisions that are found in the *California Fire Code* are a reprint from the current CCR, Title 19, Division 1 text for the code user's convenience only. The scope, applicability and appeals procedures of CCR, Title 19, Division I remain the same.

APPENDIX P
SIZING OF WATER PIPING SYSTEM

(The provisions contained in this appendix are not mandatory unless specifically referenced in the adopting ordinance.)

SECTION AP101
GENERAL

AP101.1 Scope.

AP101.1.1 This appendix outlines two procedures for sizing a water piping system (see Sections AP103.3 and AP201.1). The design procedures are based on the minimum static pressure available from the supply source, the head changes in the system caused by friction and elevation, and the rates of flow necessary for operation of various fixtures.

AP101.1.2 Because of the variable conditions encountered in hydraulic design, it is impractical to specify definite and detailed rules for sizing of the water piping system. Accordingly, other sizing or design methods conforming to good engineering practice standards are acceptable alternatives to those presented herein.

SECTION AP102
INFORMATION REQUIRED

AP102.1 Preliminary. Obtain the necessary information regarding the minimum daily static service pressure in the area where the building is to be located. If the building supply is to be metered, obtain information regarding friction loss relative to the rate of flow for meters in the range of sizes likely to be used. Friction loss data can be obtained from most manufacturers of water meters.

AP102.2 Demand load.

AP102.2.1 Estimate the supply demand of the building main and the principal branches and risers of the system by totaling the corresponding demand from the applicable part of Table AP103.3(3).

AP102.2.2 Estimate continuous supply demands, in gallons per minute (gpm) (L/m), for lawn sprinklers, air conditioners, etc., and add the sum to the total demand for fixtures. The result is the estimated supply demand for the building supply.

SECTION AP103
SELECTION OF PIPE SIZE

AP103.1 General. Decide from Table P2903.1 what is the desirable minimum residual pressure that should be maintained at the highest fixture in the supply system. If the highest group of fixtures contains flushometer valves, the pressure for the group should not be less than 15 pounds per square inch (psi) (103.4 kPa) flowing. For flush tank supplies, the available pressure should not be less than 8 psi (55.2 kPa) flowing, except blowout action fixtures must not be less than 25 psi (172.4 kPa) flowing.

AP103.2 Pipe sizing.

AP103.2.1 Pipe sizes can be selected according to the following procedure or by other design methods conforming to acceptable engineering practice and approved by the administrative authority. The sizes selected must not be less than the minimum required by this code.

AP103.2.2 Water pipe sizing procedures are based on a system of pressure requirements and losses, the sum of which must not exceed the minimum pressure available at the supply source. These pressures are as follows:

1. Pressure required at fixture to produce required flow. See Sections P2903.1 of this code and Section 604.3 of the *California Plumbing Code*.
2. Static pressure loss or gain (due to head) is computed at 0.433 psi per foot (9.8 kPa/m) of elevation change.

   Example: Assume that the highest fixture supply outlet is 20 feet (6096 mm) above or below the supply source. This produces a static pressure differential of 8.66 psi (59.8 kPa) loss [20 feet by 0.433 psi per foot (2096 mm by 9.8 kPa/m)].
3. Loss through water meter. The friction or pressure loss can be obtained from meter manufacturers.
4. Loss through taps in water main.
5. Loss through special devices, such as filters, softeners, backflow prevention devices and pressure regulators. These values must be obtained from the manufacturer.
6. Loss through valves and fittings. Losses for these items are calculated by converting to the equivalent length of piping and adding to the total pipe length.
7. Loss caused by pipe friction can be calculated when the pipe size, pipe length and flow through the pipe are known. With these three items, the friction loss can be determined. For piping flow charts not included, use manufacturers' tables and velocity recommendations.

Note: For all examples, the following metric conversions are applicable.

1 cubic foot per minute = 0.4719 L/s.

1 square foot = 0.0929 m^2.

1 degree = 0.0175 rad.

1 pound per square inch = 6.895 kPa.

1 inch = 25.4 mm.

1 foot = 304.8 mm.

1 gallon per minute = 3.785 L/m.

AP103.3 Segmented loss method. The size of water service mains, branch mains and risers by the segmented loss method, must be determined according to water supply demand [gpm (L/m)], available water pressure [psi (kPa)] and friction loss caused by the water meter and developed length of pipe [feet (m)], including the equivalent length of fittings. This design procedure is based on the following parameters:

1. The calculated friction loss through each length of pipe.
2. A system of pressure losses, the sum of which must not exceed the minimum pressure available at the street main or other source of supply.
3. Pipe sizing based on estimated peak demand, total pressure losses caused by difference in elevation, equipment, developed length and pressure required at the most remote fixture; loss through taps in water main; losses through fittings, filters, backflow prevention devices, valves and pipe friction.

Because of the variable conditions encountered in hydraulic design, it is impractical to specify definite and detailed rules for the sizing of the water piping system. Current sizing methods do not address the differences in the probability of use and flow characteristics of fixtures between types of occupancies. Creating an exact model of predicting the demand for a building is impossible and final studies assessing the impact of water conservation on demand are not yet complete. The following steps are necessary for the segmented loss method.

1. **Preliminary.** Obtain the necessary information regarding the minimum daily static service pressure in the area where the building is to be located. If the building supply is to be metered, obtain information regarding friction loss relative to the rate of flow for meters in the range of sizes to be used. Friction loss data can be obtained from manufacturers of water meters. Enough pressure must be available to overcome all system losses caused by friction and elevation so that plumbing fixtures operate properly. Section 604.6 of the *California Plumbing Code* requires that the water distribution system be designed for the minimum pressure available taking into consideration pressure fluctuations. The lowest pressure must be selected to guarantee a continuous, adequate supply of water. The lowest pressure in the public main usually occurs in the summer because of lawn sprinkling and supplying water for air-conditioning cooling towers. Future demands placed on the public main as a result of large growth or expansion should also be considered. The available pressure will decrease as additional loads are placed on the public system.
2. **Demand load.** Estimate the supply demand of the building main and the principal branches and risers of the system by totaling the corresponding demand from the applicable part of Table AP103.3(3). When estimating peak demand, sizing methods typically use water supply fixture units (w.s.f.u.) [see Table AP103.3(2)]. This numerical factor measures the load-producing effect of a single plumbing fixture of a given kind. The use of fixture units can be applied to a single basic probability curve (or table), found in the various sizing methods [see Table AP103.3(3)]. The fixture units are then converted into a gpm (L/m) flow rate for estimating demand.

   2.1. Estimate continuous supply demand in gpm (L/m) for lawn sprinklers, air conditioners, etc., and add the sum to the total demand for fixtures. The result is the estimated supply demand for the building supply. Fixture units cannot be applied to constant-use fixtures, such as hose bibbs, lawn sprinklers and air conditioners. These types of fixtures must be assigned the gpm (L/m) value.

3. **Selection of pipe size.** This water pipe sizing procedure is based on a system of pressure requirements and losses, the sum of which must not exceed the minimum pressure available at the supply source. These pressures are as follows:

   3.1. Pressure required at the fixture to produce required flow. See Section P2903.1 of this code and Section 604.3 of the *California Plumbing Code*.

   3.2. Static pressure loss or gain (because of head) is computed at 0.433 psi per foot (9.8 kPa/m) of elevation change.

   3.3. Loss through a water meter. The friction or pressure loss can be obtained from the manufacturer.

   3.4. Loss through taps in water main [see Table AP103.3(4)].

   3.5. Loss through special devices, such as filters, softeners, backflow prevention devices and pressure regulators. These values must be obtained from the manufacturers.

   3.6. Loss through valves and fittings [see Tables AP103.3(5) and AP103.3(6)]. Losses for these items are calculated by converting to the equivalent length of piping and adding to the total pipe length.

   3.7. Loss caused by pipe friction can be calculated when the pipe size, pipe length and flow through the pipe are known. With these three items, the friction loss can be determined using Figures AP103.3(2) through AP103.3(7). When using charts, use pipe inside diameters. For piping flow charts not included, use manufacturers' tables and velocity recommendations. Before attempting to size any water supply system, it is necessary to gather preliminary information which includes available pressure, piping material, select design velocity, elevation differences and developed length to the most remote fixture. The water supply system is divided into sections at major changes in elevation or where branches lead to fixture groups. The peak demand must be determined in each part of the hot and cold water supply system which includes the corresponding w.s.f.u. and conversion to gpm (L/m) flow rate to be expected through each section. Sizing methods require determination of the "most hydraulically remote" fixture to compute the pressure loss caused by pipe and fittings. The hydraulically remote fixture represents the most downstream fixture along the circuit of piping requiring the most available pressure to operate properly. Consideration must be given to all pressure demands and losses, such as friction caused by pipe, fittings and equipment; elevation; and the residual pressure required by Table P2903.1. The two most common and frequent complaints about water supply system operation are lack of adequate pressure and noise.

Problem: What size Type L copper water pipe, service and distribution will be required to serve a two-story factory building having on each floor, back-to-back, two toilet rooms each equipped with hot and cold water? The highest fixture is 21 feet above the street main, which is tapped with a 2-inch corporation cock at which point the minimum pressure is 55 psi. In the building basement, a 2-inch meter with a maximum pressure drop of 11 psi and 3-inch reduced pressure principle backflow preventer with a maximum pressure drop of 9 psi are to be installed. The system is shown in Figure AP103.3(1). To be determined are the pipe sizes for the service main, and the cold and hot water distribution pipes.

Solution: A tabular arrangement such as shown in Table AP103.3(1) should first be constructed. The steps to be followed are indicated by the tabular arrangement itself as they are in sequence, Columns 1 through 10 and Lines A through L.

Step 1

Columns 1 and 2: Divide the system into sections breaking at major changes in elevation or where branches lead to fixture groups. After Point B [see Figure AP103.3(1)], separate consideration will be given to the hot and cold water piping. Enter the sections to be considered in the service and cold water piping in Column 1 of the tabular arrangement. Column 1 of Table AP103.3(1) provides a line-by-line, recommended tabular arrangement for use in solving pipe sizing.

The objective in designing the water supply system is to ensure an adequate water supply and pressure to all fixtures and equipment. Column 2 provides the psi (kPa) to be considered separately from the minimum pressure available at the main. Losses to take into consideration are the following: the differences in elevations between the water supply source and the highest water supply outlet; meter pressure losses; the tap in main loss; special fixture devices, such as water softeners and backflow prevention devices; and the pressure required at the most remote fixture outlet.

The difference in elevation can result in an increase or decrease in available pressure at the main. Where the water supply outlet is located above the source, this results in a loss in the available pressure and is subtracted from the pressure at the water source. Where the highest water supply outlet is located below the water supply source, there will be an increase in pressure that is added to the available pressure of the water source.

Column 3: According to Table AP103.3(3), determine the gpm (L/m) of flow to be expected in each section of the system. These flows range from 28.6 to 108 gpm. Load values for fixtures must be determined as w.s.f.u. and then converted to a gpm rating to determine peak demand.

When calculating peak demands, the w.s.f.u. are added and then converted to the gpm rating. For continuous flow fixtures, such as hose bibbs and lawn sprinkler systems, add the gpm demand to the intermittent demand of fixtures. For example, a total of 120 w.s.f.u. is converted to a demand of 48 gpm. Two hose bibbs × 5 gpm demand = 10 gpm. Total gpm rating = 48.0 gpm + 10 gpm = 58.0 gpm demand.

Step 2

Line A: Enter the minimum pressure available at the main source of supply in Column 2. This is 55 psi (379.2 kPa). The local water authorities generally keep records of pressures at different times of the day and year. The available pressure can also be checked from nearby buildings or from fire department hydrant checks.

Line B: Determine from Table P2903.1 the highest pressure required for the fixtures on the system, which is 15 psi (103.4 kPa), to operate a flushometer valve. The most remote fixture outlet is necessary to compute the pressure loss caused by pipe and fittings, and represents the most downstream fixture along the circuit of piping requiring the available pressure to operate properly as indicated by Table P2903.1.

Line C: Determine the pressure loss for the meter size given or assumed. The total water flow from the main through the service as determined in Step 1 will serve to aid in the meter selected. There are three common types of water meters; the pressure losses are determined by the American Water Works Association Standards for displacement type, compound type and turbine type. The maximum pressure loss of such devices takes into consideration the meter size, safe operating capacity [gpm (L/m)] and maximum rates for continuous operations [gpm (L/m)]. Typically, equipment imparts greater pressure losses than piping.

Line D: Select from Table AP103.3(4) and enter the pressure loss for the tap size given or assumed. The loss of pressure through taps and tees in psi (kPa) is based on the total gpm (L/m) flow rate and size of the tap.

Line E: Determine the difference in elevation between the main and source of supply and the highest fixture on the system. Multiply this figure, expressed in feet (mm), by 0.43 psi. Enter the resulting psi (kPa) loss on Line E. The difference in elevation between the water supply source and the highest water supply outlet has a significant impact on the sizing of the water supply system. The difference in elevation usually results in a loss in the available pressure because the water supply outlet is generally located above the water supply source. The loss is caused by the pressure required to lift the water to the outlet. The pressure loss is subtracted from the pressure at the water source. Where the highest water supply outlet is located below the water source, there will be an increase in pressure which is added to the available pressure of the water source.

Lines F, G and H: The pressure losses through filters, backflow prevention devices or other special fixtures must be obtained from the manufacturer or estimated and entered on these lines. Equipment, such as backflow prevention devices, check valves, water softeners, instantaneous, or tankless water heaters, filters and strainers, can impart a much greater pressure loss than the piping. The pressure losses can range from 8 to 30 psi.

Step 3

Line I: The sum of the pressure requirements and losses that affect the overall system (Lines B through H) is entered on this line. Summarizing the steps, all of the system losses are subtracted from the minimum water pressure. The remainder is the pressure available for friction, defined as the energy available to push the water through the pipes to each fixture. This force can be used as an average pressure loss, as long as the pressure available for friction is not exceeded. Saving a certain amount for available water supply pressures as an area incurs growth, or because of the aging of the pipe or equipment added to the system is recommended.

Step 4

Line J: Subtract Line I from Line A. This gives the pressure that remains available from overcoming friction losses in the system. This figure is a guide to the pipe size that is chosen for each section, incorporating the total friction losses to the most remote outlet (measured length is called developed length).

Exception: When the main is above the highest fixture, the resulting psi (kPa) must be considered a pressure gain (static head gain) and omitted from the sums of Lines B through H and added to Line J.

The maximum friction head loss that can be tolerated in the system during peak demand is the difference between the static pressure at the highest and most remote outlet at no-flow conditions and the minimum flow pressure required at that outlet. If the losses are within the required limits, every run of pipe will also be within the required friction head loss. Static pressure loss is at the most remote outlet in feet × 0.433 = loss in psi caused by elevation differences.

Step 5

Column 4: Enter the length of each section from the main to the most remote outlet (at Point E). Divide the water supply system into sections breaking at major changes in elevation or where branches lead to fixture groups.

Step 6

Column 5: When selecting a trial pipe size, the length from the water service or meter to the most remote fixture outlet must be measured to determine the developed length. However, in systems having a flushometer valve or temperature-controlled shower at the topmost floors, the developed length would be from the water meter to the most remote flushometer valve on the system. A rule of

thumb is that size will become progressively smaller as the system extends farther from the main source of supply. Trial pipe size may be arrived at by the following formula:

Line J: (Pressure available to overcome pipe friction) × 100/equivalent length of run total developed length to most remote fixture × percentage factor of 1.5 (Note: a percentage factor is used only as an estimate for friction losses imposed for fittings for initial trial pipe size) = psi (average pressure drop per 100 feet of pipe).

For trial pipe size, see Figure AP103.3(3) (Type L copper) based on 2.77 psi and 108 gpm = $2^1/_2$ inches. To determine the equivalent length of run to the most remote outlet, the developed length is determined and added to the friction losses for fittings and valves. The developed lengths of the designated pipe sections are as follows:

A-B	54 feet
B-C	8 feet
C-D	13 feet
D-E	150 feet

Total developed length = 225 feet

The equivalent length of the friction loss in fittings and valves must be added to the developed length (most remote outlet). Where the size of fittings and valves is not known, the added friction loss should be approximated. A general rule that has been used is to add 50 percent of the developed length to allow for fittings and valves. For example, the equivalent length of run equals the developed length of run (225 feet × 1.5 = 338 feet). The total equivalent length of run for determining a trial pipe size is 338 feet.

Example: 9.36 (pressure available to overcome pipe friction) × 100/338 (equivalent length of run = 225 × 1.5) = 2.77 psi (average pressure drop per 100 feet of pipe).

Step 7

Column 6: Select from Table AP103.3(6) the equivalent lengths for the trial pipe size of fittings and valves on each pipe section. Enter the sum for each section in Column 6. (The number of fittings to be used in this example must be an estimate). The equivalent length of piping is the developed length plus the equivalent lengths of pipe corresponding to the friction head losses for fittings and valves. Where the size of fittings and valves is not known, the added friction head losses must be approximated. An estimate for this example is found in Table AP.1.

Step 8

Column 7: Add the figures from Columns 4 and 6, and enter in Column 7. Express the sum in hundreds of feet.

Step 9

Column 8: Select from Figure AP103.3(3) the friction loss per 100 feet of pipe for the gpm flow in a section (Column 3) and trial pipe size (Column 5). Maximum friction head loss per 100 feet is determined on the basis of the total pressure available for friction head loss and the longest equivalent length of run. The selection is based on the gpm demand, uniform friction head loss and maximum design velocity. Where the size indicated by the hydraulic table indicates a velocity in excess of the selected velocity, a size must be selected which produces the required velocity.

Step 10

Column 9: Multiply the figures in Columns 7 and 8 for each section and enter in Column 9.

Total friction loss is determined by multiplying the friction loss per 100 feet for each pipe section in the total developed length by the pressure loss in fittings expressed as equivalent length in feet (mm). Note: Section C-F should be considered in the total pipe friction losses only if greater loss occurs in Section C-F than in pipe Section D-E. Section C-F is not considered in the total developed length. Total friction loss in equivalent length is determined in Table AP.2.

Step 11

Line K: Enter the sum of the values in Column 9. The value is the total friction loss in equivalent length for each designated pipe section.

Step 12

Line L: Subtract Line J from Line K and enter in Column 10.

The result should always be a positive or plus figure. If it is not, repeat the operation using Columns 5, 6, 8 and 9 until a balance or near balance is obtained. If the difference between Lines J and K is a high positive number, it is an indication that the pipe sizes are too large and should be reduced, thus saving materials. In such a case, the operations using Columns 5, 6, 8 and 9 should be repeated.

The total friction losses are determined and subtracted from the pressure available to overcome pipe friction for the trial pipe size. This number is critical because it provides a guide to whether the pipe size selected is too large and the process should be repeated to obtain an economically designed system.

Answer: The final figures entered in Column 5 become the design pipe size for the respective sections. Repeating this operation a second time using the same sketch but considering the demand for hot water, it is possible to size the hot water distribution piping. This has been worked up as a part of the overall problem in the tabular arrangement used for sizing the service and water distribution piping. Note that consideration must be given to the pressure losses from the street main to the water heater (Section A-B) in determining the hot water pipe sizes.

TABLE AP.1

COLD WATER PIPE SECTION	FITTINGS/VALVES	PRESSURE LOSS EXPRESSED AS EQUIVALENT LENGTH OF TUBE (feet)	HOT WATER PIPE SECTION	FITTINGS/VALVES	PRESSURE LOSS EXPRESSED AS EQUIVALENT OF TUBE (feet)
A-B	3 – 2 1/2″ Gate valves	3	A-B	3 – 2 1/2″ Gate valves	3
	1 – 2 1/2″ Side branch tee	12	—	1 – 2 1/2″ Side branch tee	12
B-C	1 – 2 1/2″ Straight run tee	0.5	B-C	1 – 2″ Straight run tee	7
	—	—	—	1 – 2″ 90-degree ell	0.5
C-F	1 – 2 1/2″ Side branch tee	12	C-F	1 – 1 1/2″ Side branch tee	7
C-D	1 – 2 1/2″ 90-degree ell	7	C-D	1 – 1/2″ 90-degree ell	4
D-E	1 – 2 1/2″ Side branch tee	12	D-E	1 – 1 1/2″ Side branch tee	7

For SI: 1 inch = 25.4 mm, 1 foot = 304.8 mm, 1 degree = 0.01745 rad.

TABLE AP.2

PIPE SECTIONS	FRICTION LOSS EQUIVALENT LENGTH (feet)	
	Cold Water	Hot Water
A-B	0.69 × 3.2 = 2.21	0.69 × 3.2 = 2.21
B-C	0.085 × 3.1 = 0.26	0.16 × 1.4 = 0.22
C-D	0.20 × 1.9 = 0.38	0.17 × 3.2 = 0.54
D-E	1.62 × 1.9 = 3.08	1.57 × 3.2 = 5.02
Total pipe friction losses (Line K)	5.93	7.99

For SI: 1 foot = 304.8 mm.

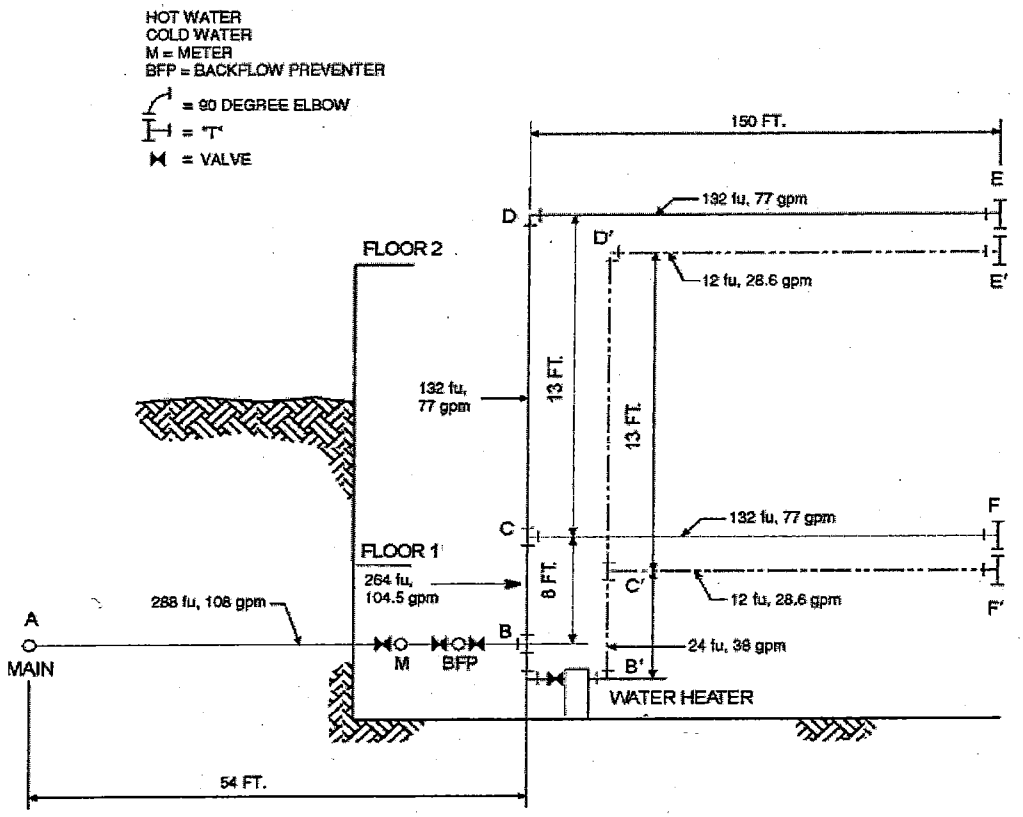

For SI: 1 foot = 304.8 mm, 1 gallon per minute = 3.785 L/m.

FIGURE AP103.3(1)
EXAMPLE—SIZING

TABLE AP103.3(1)
RECOMMENDED TABULAR ARRANGEMENT FOR USE IN SOLVING PIPE SIZING PROBLEMS

COLUMN	1	2	3	4	5	6	7	8	9	10
Line	Description	Pounds per square inch	Gallons per min through section	Length of section (feet)	Trial pipe size (inches)	Equivalent length of fittings and valves (feet)	Total equivalent length Columns 4 and 6 (100 feet)	Friction loss per 100 feet of trial size pipe (psi)	Friction loss in equivalent length Column 8 x Column 7 (psi)	Excess pressure over friction losses (psi)
A	Service and cold water distribution piping[a] — Minimum pressure available at main	55.00								
B	Highest pressure required at a fixture (see Table P2903.1)	15.00								
C	Meter loss 2″ meter	11.00								
D	Tap in main loss 2″ tap [see Table AP103.3(4)]	1.61								
E	Static head loss 21 ft × 0.43 psi/ft	9.03								
F	Special fixture loss backflow preventer	9.00								
G	Special fixture loss—Filter	0.00								
H	Special fixture loss—Other	0.00								
I	Total overall losses and requirements Sum of (Lines B through H)	45.64								
J	Pressure available to overcome pipe friction (Line A minus Line I)	9.36								
	DESIGNATION	FU	108.0	54		15.00	0.69	3.2	2.21	—
	Pipe section (from diagram)	A-B .288	104.5	8	$2^1/_2$	0.5	0.85	3.1	0.26	—
	Cold water	B-C .264	77.0	13	$2^1/_2$	7.00	0.20	1.9	0.38	—
	distribution piping	C-D .132	77.0	150	$2^1/_2$	12.00	1.62	1.9	3.08	—
		C-F[b] .132	77.0	150	$2^1/_2$	12.00	1.62	1.9	3.08	—
		D-E[b] .132			$2^1/_2$					
K	Total pipe friction losses (cold)		—	—	—	—	—	—	5.93	—
L	Difference (Line J minus Line K)		—	—	—	—	—	—	—	3.43
	Pipe section (from digram)	A′B′ .288	108.0	54	$2^1/_2$	12.00	0.69	3.3	2.21	—
	Diagram	B′C′ .24	38.0	8	2	7.5	0.16	1.4	0.22	—
	Hot water	C′D′ .12	28.6	13	$1^1/_2$	4.0	0.17	3.2	0.54	—
	Distribution	C′F′[b] .12	28.6	150	$1^1/_2$	7.00	1.57	3.2	5.02	—
	Piping	D′E′[b] .12	28.6	150	$1^1/_2$	7.00	1.57	3.2	5.02	—
K	Total pipe friction losses (hot)		—	—	—	—	—	—	7.99	—
L	Difference (Line J minus Line K)		—	—	—	—	—	—	—	1.37

For SI: 1 inch = 25.4 mm, 1 foot = 304.8 mm, 1 pounds per square inch = 6.895 kPa, 1 gallons per minute = 3.785 L/m.

a. To be considered as pressure gain for fixtures below main (to consider separately, omit from "I" and add to "J").

b. To consider separately, in Line K use Section C-F only if greater loss than above.

TABLE AP103.3(2)
LOAD VALUES ASSIGNED TO FIXTURES[a]

FIXTURE	OCCUPANCY	TYPE OF SUPPLY CONTROL	LOAD VALUES, IN WATER SUPPLY FIXTURE UNITS (w.s.f.u.)		
			Cold	Hot	Total
Bathroom group	Private	Flush tank	2.7	1.5	3.6
Bathroom group	Private	Flushometer valve	6.0	3.0	8.0
Bathtub	Private	Faucet	1.0	1.0	1.4
Bathtub	Public	Faucet	3.0	3.0	4.0
Bidet	Private	Faucet	1.5	1.5	2.0
Combination fixture	Private	Faucet	2.25	2.25	3.0
Dishwashing machine	Private	Automatic	—	1.4	1.4
Drinking fountain	Offices, etc.	$^3/_8$″ valve	0.25	—	0.25
Kitchen sink	Private	Faucet	1.0	1.0	1.4
Kitchen sink	Hotel, restaurant	Faucet	3.0	3.0	4.0
Laundry trays (1 to 3)	Private	Faucet	1.0	1.0	1.4
Lavatory	Private	Faucet	0.5	0.5	0.7
Lavatory	Public	Faucet	1.5	1.5	2.0
Service sink	Offices, etc.	Faucet	2.25	2.25	3.0
Shower head	Public	Mixing valve	3.0	3.0	4.0
Shower head	Private	Mixing valve	1.0	1.0	1.4
Urinal	Public	1″ flushometer valve	10.0	—	10.0
Urinal	Public	$^3/_4$″ flushometer valve	5.0	—	5.0
Urinal	Public	Flush tank	3.0	—	3.0
Washing machine (8 lb)	Private	Automatic	1.0	1.0	1.4
Washing machine (8 lb)	Public	Automatic	2.25	2.25	3.0
Washing machine (15 lb)	Public	Automatic	3.0	3.0	4.0
Water closet	Private	Flushometer valve	6.0	—	6.0
Water closet	Private	Flush tank	2.2	—	2.2
Water closet	Public	Flushometer valve	10.0	—	10.0
Water closet	Public	Flush tank	5.0	—	5.0
Water closet	Public or private	Flushometer tank	2.0	—	2.0

For SI: 1 inch = 25.4 mm, 1 pound = 0.454 kg.

a. For fixtures not listed, loads should be assumed by comparing the fixture to one listed using water in similar quantities and at similar rates. The assigned loads for fixtures with both hot and cold water supplies are given for separate hot and cold water loads, and for total load. The separate hot and cold water loads being three-fourths of the total load for the fixture in each case.

TABLE AP103.3(3)
TABLE FOR ESTIMATING DEMAND

SUPPLY SYSTEMS PREDOMINANTLY FOR FLUSH TANKS			SUPPLY SYSTEMS PREDOMINANTLY FOR FLUSHOMETERS		
Load	Demand		Load	Demand	
(w.s.f.u.)	(gpm	(cfm)	(w.s.f.u.)	(gpm)	(cfm)
1	3.0	0.04104	—	—	—
2	5.0	0.0684	—	—	—
3	6.5	0.86892	—	—	—
4	8.0	1.06944	—	—	—
5	9.4	1.256592	5	15.0	2.0052
6	10.7	1.430376	6	17.4	2.326032
7	11.8	1.577424	7	19.8	2.646364
8	12.8	1.711104	8	22.2	2.967696
9	13.7	1.831416	9	24.6	3.288528
10	14.6	1.951728	10	27.0	3.60936
11	15.4	2.058672	11	27.8	3.716304
12	16.0	2.13888	12	28.6	3.823248
13	16.5	2.20572	13	29.4	3.930192
14	17.0	2.27256	14	30.2	4.037136
15	17.5	2.3394	15	31.0	4.14408
16	18.0	2.90624	16	31.8	4.241024
17	18.4	2.459712	17	32.6	4.357968
18	18.8	2.513184	18	33.4	4.464912
19	19.2	2.566656	19	34.2	4.571856
20	19.6	2.620128	20	35.0	4.6788
25	21.5	2.87412	25	38.0	5.07984
30	23.3	3.114744	30	42.0	5.61356
35	24.9	3.328632	35	44.0	5.88192
40	26.3	3.515784	40	46.0	6.14928
45	27.7	3.702936	45	48.0	6.41664
50	29.1	3.890088	50	50.0	6.684
60	32.0	4.27776	60	54.0	7.21872
70	35.0	4.6788	70	58.0	7.75344
80	38.0	5.07984	80	61.2	8.181216
90	41.0	5.48088	90	64.3	8.595624
100	43.5	5.81508	100	67.5	9.0234
120	48.0	6.41664	120	73.0	9.75864
140	52.5	7.0182	140	77.0	10.29336
160	57.0	7.61976	160	81.0	10.82808
180	61.0	8.15448	180	85.5	11.42964
200	65.0	8.6892	200	90.0	12.0312
225	70.0	9.3576	225	95.5	12.76644

(continued)

TABLE AP103.3(3)—continued
TABLE FOR ESTIMATING DEMAND

SUPPLY SYSTEMS PREDOMINANTLY FOR FLUSH TANKS			SUPPLY SYSTEMS PREDOMINANTLY FOR FLUSHOMETERS		
Load	Demand		Load	Demand	
(w.s.f.u.)	(gpm)	(cfm)	(w.s.f.u.)	(gpm)	(cfm)
250	75.0	10.026	250	101.0	13.50168
275	80.0	10.6944	275	104.5	13.96956
300	85.0	11.3628	300	108.0	14.43744
400	105.0	14.0364	400	127.0	16.97736
500	124.0	16.57632	500	143.0	19.11624
750	170.0	22.7256	750	177.0	23.66136
1,000	208.0	27.80544	1,000	208.0	27.80544
1,250	239.0	31.94952	1,250	239.0	31.94952
1,500	269.0	35.95992	1,500	269.0	35.95992
1,750	297.0	39.70296	1,750	297.0	39.70296
2,000	325.0	43.446	2,000	325.0	43.446
2,500	380.0	50.7984	2,500	380.0	50.7984
3,000	433.0	57.88344	3,000	433.0	57.88344
4,000	535.0	70.182	4,000	525.0	70.182
5,000	593.0	79.27224	5,000	593.0	79.27224

For SI: 1 gallon per minute = 3.785 L/m, 1 cubic foot per minute = 0.000471 m^3/s.

TABLE AP103.3(4)
LOSS OF PRESSURE THROUGH TAPS AND TEES IN POUNDS PER SQUARE INCH (psi)

GALLONS PER MINUTE	SIZE OF TAP OR TEE (inches)						
	$^5/_8$	$^3/_4$	1	$1^1/_4$	$1^1/_2$	2	3
10	1.35	0.64	0.18	0.08	—	—	—
20	5.38	2.54	0.77	0.31	0.14	—	—
30	12.10	5.72	1.62	0.69	0.33	0.10	—
40	—	10.20	3.07	1.23	0.58	0.18	—
50	—	15.90	4.49	1.92	0.91	0.28	—
60	—	—	6.46	2.76	1.31	0.40	—
70	—	—	8.79	3.76	1.78	0.55	0.10
80	—	—	11.50	4.90	2.32	0.72	0.13
90	—	—	14.50	6.21	2.94	0.91	0.16
100	—	—	17.94	7.67	3.63	1.12	0.21
120	—	—	25.80	11.00	5.23	1.61	0.30
140	—	—	35.20	15.00	7.12	2.20	0.41
150	—	—	—	17.20	8.16	2.52	0.47
160	—	—	—	19.60	9.30	2.92	0.54
180	—	—	—	24.80	11.80	3.62	0.68
200	—	—	—	30.70	14.50	4.48	0.84
225	—	—	—	38.80	18.40	5.60	1.06
250	—	—	—	47.90	22.70	7.00	1.31
275	—	—	—	—	27.40	7.70	1.59
300	—	—	—	—	32.60	10.10	1.88

For SI: 1 inch = 25.4 mm, 1 pound per square inch = 6.895 kPa, 1 gallon per minute = 3.785 L/m.

TABLE AP103.3(5)
ALLOWANCE IN EQUIVALENT LENGTHS OF PIPE FOR FRICTION LOSS IN VALVES AND THREADED FITTINGS (feet)

FITTING OR VALVE	PIPE SIZE (inches)							
	1/2	3/4	1	1 1/4	1 1/2	2	2 1/2	3
45-degree elbow	1.2	1.5	1.8	2.4	3.0	4.0	5.0	6.0
90-degree elbow	2.0	2.5	3.0	4.0	5.0	7.0	8.0	10.0
Tee, run	0.6	0.8	0.9	1.2	1.5	2.0	2.5	3.0
Tee, branch	3.0	4.0	5.0	6.0	7.0	10.0	12.0	15.0
Gate valve	0.4	0.5	0.6	0.8	1.0	1.3	1.6	2.0
Balancing valve	0.8	1.1	1.5	1.9	2.2	3.0	3.7	4.5
Plug-type cock	0.8	1.1	1.5	1.9	2.2	3.0	3.7	4.5
Check valve, swing	5.6	8.4	11.2	14.0	16.8	22.4	28.0	33.6
Globe valve	15.0	20.0	25.0	35.0	45.0	55.0	65.0	80.0
Angle valve	8.0	12.0	15.0	18.0	22.0	28.0	34.0	40.0

For SI: 1 inch = 25.4 mm, 1 foot = 304.8 mm, 1 degree = 0.0175 rad.

TABLE AP103.3(6)
PRESSURE LOSS IN FITTINGS AND VALVES EXPRESSED AS EQUIVALENT LENGTH OF TUBE[a] (feet)

NOMINAL OR STANDARD SIZE (inches)	FITTINGS				Coupling	VALVES			
	Standard Ell		90-degree Tee			Ball	Gate	Butterfly	Check
	90 Degree	45 Degree	Side Branch	Straight Run					
3/8	0.5	—	1.5	—	—	—	—	—	1.5
1/2	1	0.5	2	—	—	—	—	—	2
5/8	1.5	0.5	2	—	—	—	—	—	2.5
3/4	2	0.5	3	—	—	—	—	—	3
1	2.5	1	4.5	—	—	0.5	—	—	4.5
1 1/4	3	1	5.5	0.5	0.5	0.5	—	—	5.5
1 1/2	4	1.5	7	0.5	0.5	0.5	—	—	6.5
2	5.5	2	9	0.5	0.5	0.5	0.5	7.5	9
2 1/2	7	2.5	12	0.5	0.5	—	1	10	11.5
3	9	3.5	15	1	1	—	1.5	15.5	14.5
3 1/2	9	3.5	14	1	1	—	2	—	12.5
4	12.5	5	21	1	1	—	2	16	18.5
5	16	6	27	1.5	1.5	—	3	11.5	23.5
6	19	7	34	2	2	—	3.5	13.5	26.5
8	29	11	50	3	3	—	5	12.5	39

For SI: 1 inch = 25.4 mm, 1 foot = 304.8 mm, 1 degree = 0.01745 rad.

a. Allowances are for streamlined soldered fittings and recessed threaded fittings. For threaded fittings, double the allowances shown in the table. The equivalent lengths presented in the table are based on a C factor of 150 in the Hazen-Williams friction loss formula. The lengths shown are rounded to the nearest half-foot.

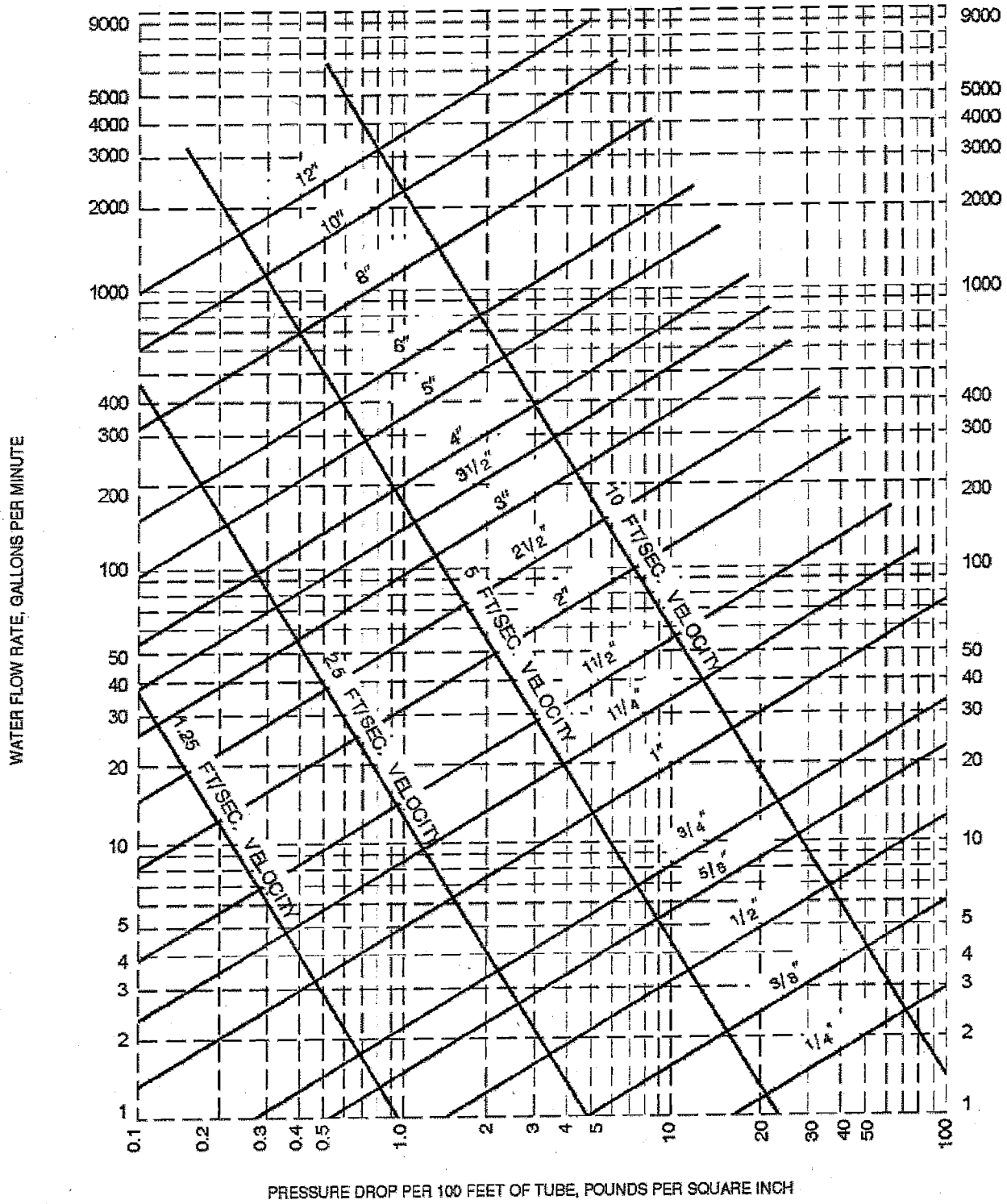

Note: Fluid velocities in excess of 5 to 8 feet per second are not usually recommended.

For SI: 1 inch = 25.4 mm, 1 foot = 304.8 mm, 1 gallon per minute = 3.785 L/m, 1 pounds per square inch = 6.895 kPa, 1 foot per second = 0.305 m/s.

a. This figure applies to smooth new copper tubing with recessed (streamline) soldered joints and to the actual sizes of types indicated on the diagram.

FIGURE AP103.3(2)
FRICTION LOSS IN SMOOTH PIPE[a]
(TYPE K, ASTM B 88 COPPER TUBING)

4316

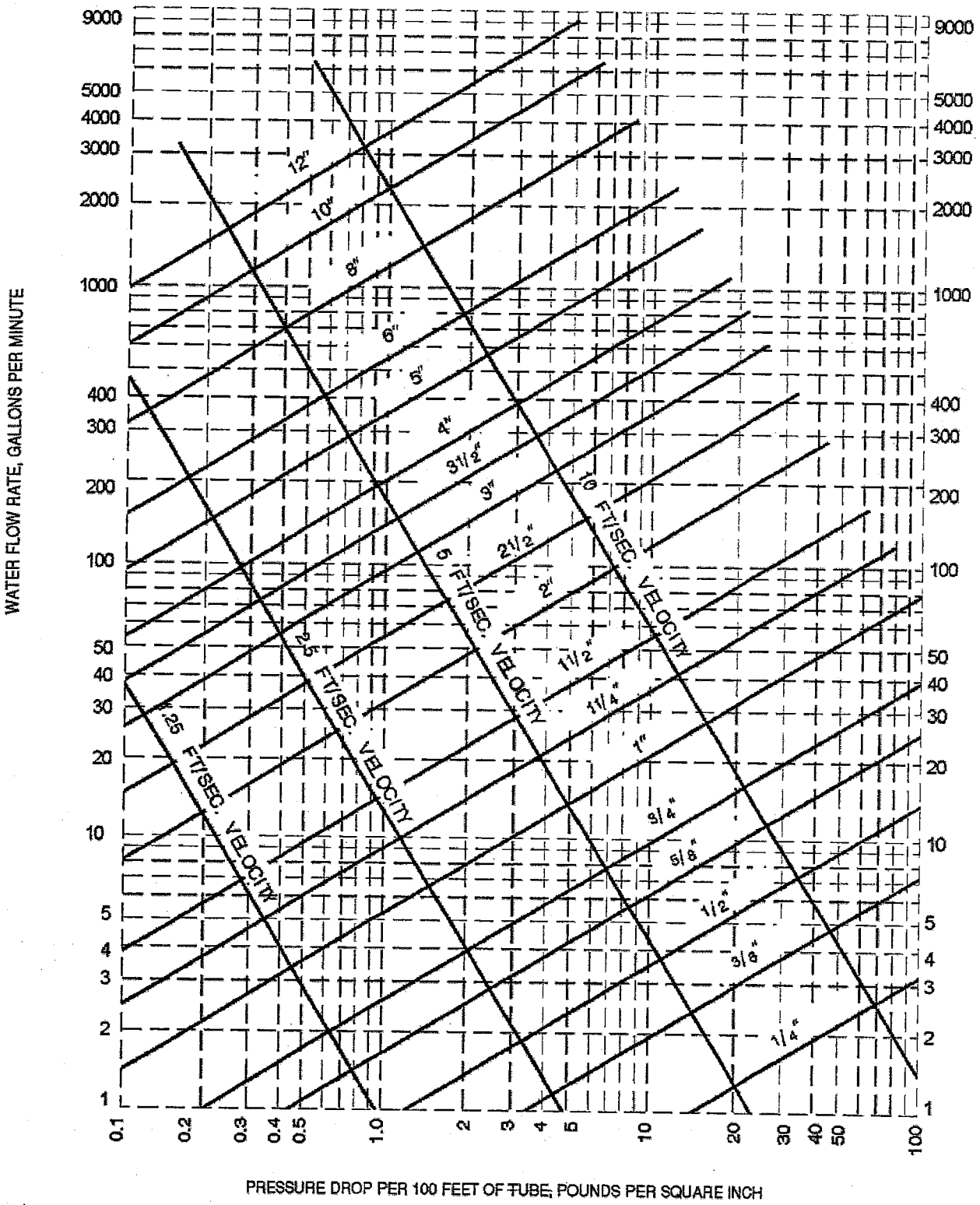

Note: Fluid velocities in excess of 5 to 8 feet per second are not usually recommended.

For SI: 1 inch = 25.4 mm, 1 foot = 304.8 mm, 1 gallon per minute = 3.785 L/m, 1 pounds per square inch = 6.895 kPa, 1 foot per second = 0.305 m/s.

a. This figure applies to smooth new copper tubing with recessed (streamline) soldered joints and to the actual sizes of types indicated on the diagram.

FIGURE AP103.3(3)
FRICTION LOSS IN SMOOTH PIPE[a]
(TYPE L, ASTM B 88 COPPER TUBING)

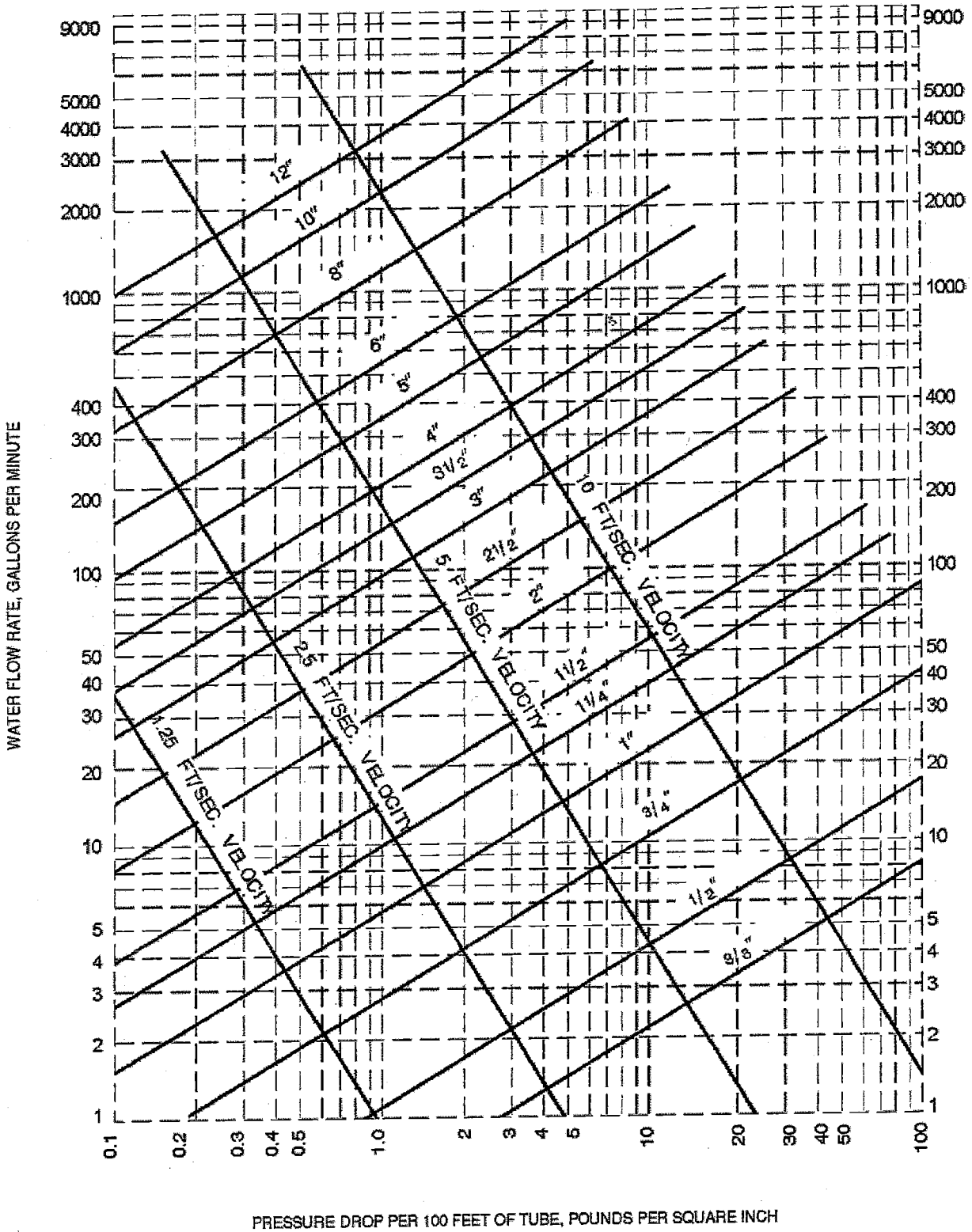

Note: Fluid velocities in excess of 5 to 8 feet per second are not usually recommended.

For SI: 1 inch = 25.4 mm, 1 foot = 304.8 mm, 1 gallon per minute = 3.785 L/m, 1 pounds per square inch = 6.895 kPa, 1 foot per second = 0.305 m/s.

a. This figure applies to smooth new copper tubing with recessed (streamline) soldered joints and to the actual sizes of types indicated on the diagram.

FIGURE AP103.3(4)
FRICTION LOSS IN SMOOTH PIPE[a]
(TYPE M, ASTM B 88 COPPER TUBING)

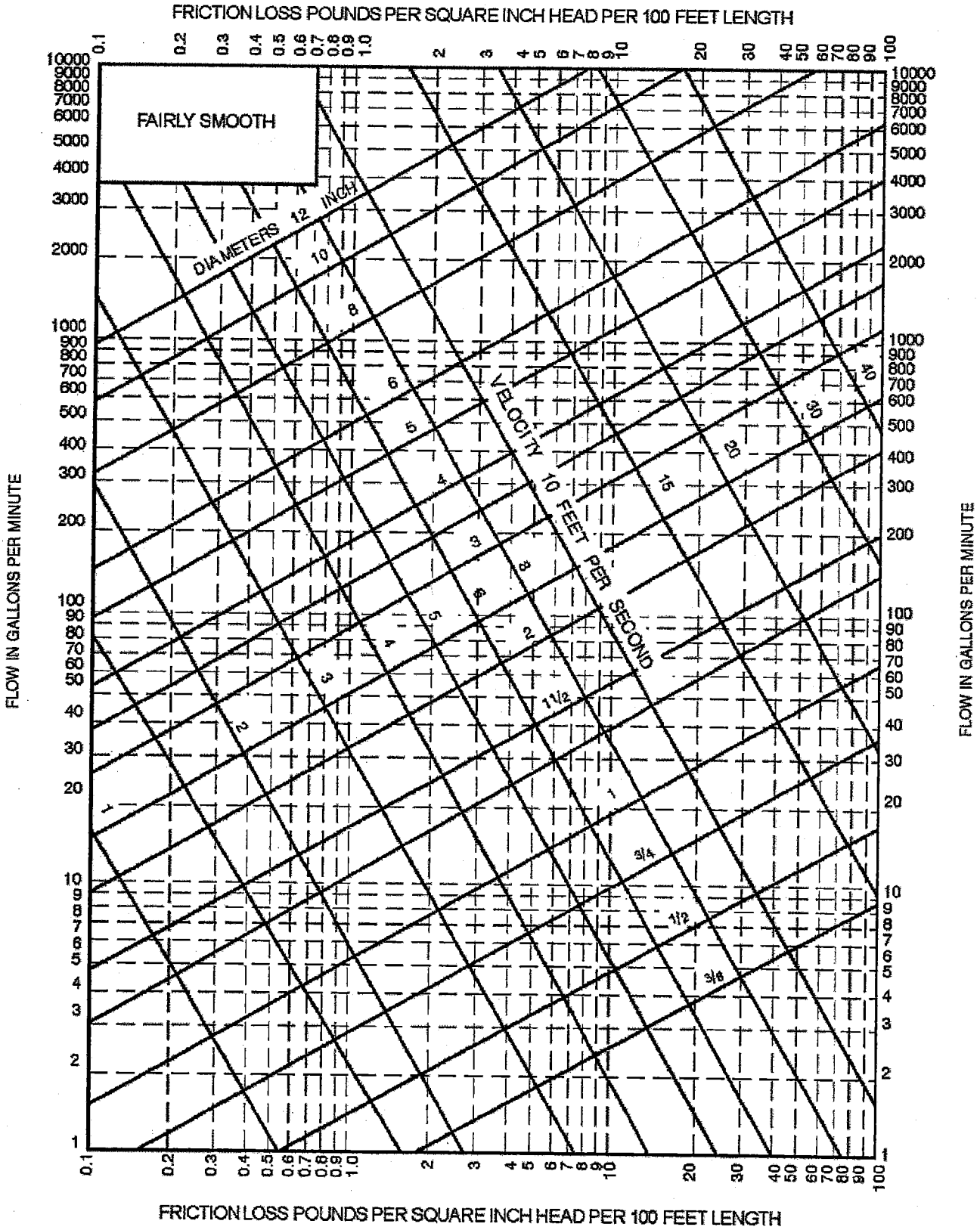

For SI: 1 inch = 25.4 mm, 1 foot = 304.8 mm, 1 gallon per minute = 3.785 L/m, 1 pounds per square inch = 6.895 kPa, 1 foot per second = 0.305 m/s.
a. This figure applies to smooth new steel (fairly smooth) pipe and to actual diameters of standard-weight pipe.

FIGURE AP103.3(5)
FRICTION LOSS IN FAIRLY SMOOTH PIPE[a]

4319

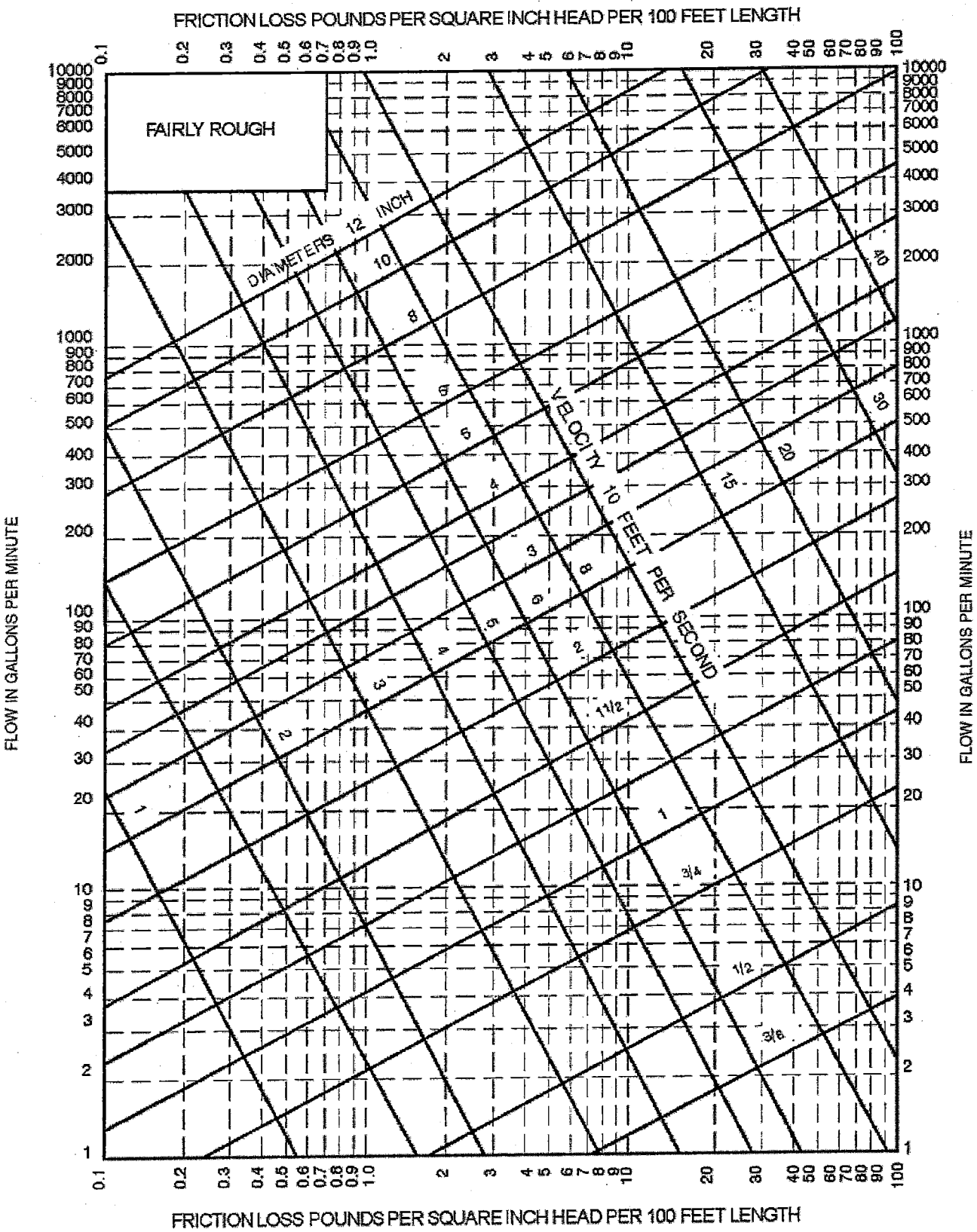

For SI: 1 inch = 25.4 mm, 1 foot = 304.8 mm, 1 gallon per minute = 3.785 L/m, 1 pounds per square inch = 6.895 kPa, 1 foot per second = 0.305 m/s.

a. This figure applies to fairly rough pipe and to actual diameters which, in general, will be less than the actual diameters of the new pipe of the same kind.

FIGURE AP103.3(6)
FRICTION LOSS IN FAIRLY ROUGH PIPE[a]

4320

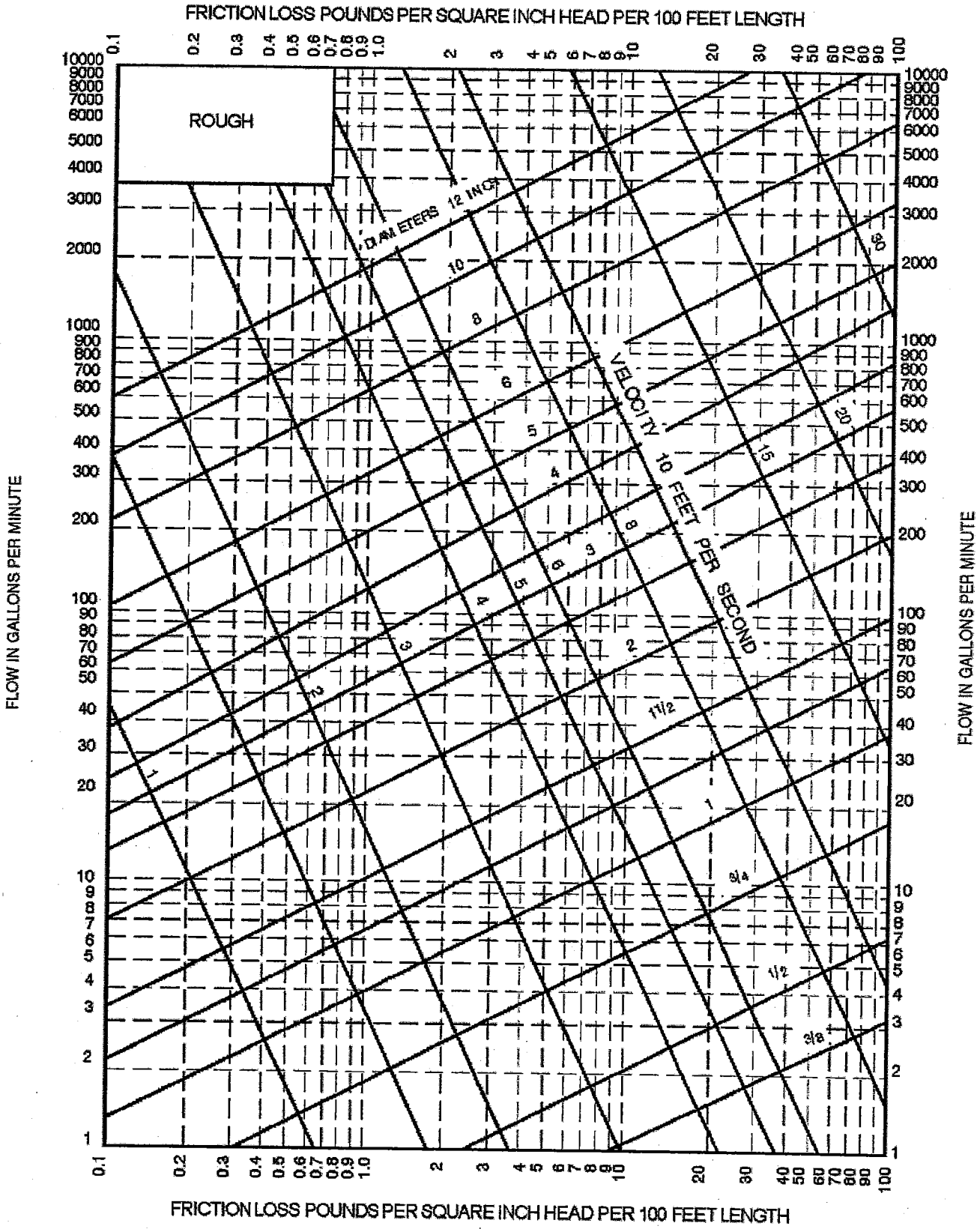

For SI: 1 inch = 25.4 mm, 1 foot = 304.8 mm, 1 gallon per minute = 3.785 L/m, 1 pounds per square inch = 6.895 kPa, 1 foot per second = 0.305 m/s.
a. This figure applies to very rough pipe and existing pipe, and to their actual diameters.

FIGURE AP103.3(7)
FRICTION LOSS IN ROUGH PIPE[a]

4321

SECTION AP201
SELECTION OF PIPE SIZE

AP201.1 Size of water-service mains, branch mains and risers. The minimum size water service pipe shall be $^3/_4$ inch (19.1 mm). The size of water service mains, branch mains and risers shall be determined according to water supply demand [gpm (L/m)], available water pressure [psi (kPa)] and friction loss caused by the water meter and developed length of pipe [feet (m)], including the equivalent length of fittings. The size of each water distribution system shall be determined according to the procedure outlined in this section or by other design methods conforming to acceptable engineering practice and approved by the building official:

1. Supply load in the building water distribution system shall be determined by the total load on the pipe being sized, in terms of w.s.f.u., as shown in Table AP103.3(2). For fixtures not listed, choose a w.s.f.u. value of a fixture with similar flow characteristics.
2. Obtain the minimum daily static service pressure [psi (kPa)] available (as determined by the local water authority) at the water meter or other source of supply at the installation location. Adjust this minimum daily static pressure [psi (kPa)] for the following conditions:
   2.1. Determine the difference in elevation between the source of supply and the highest water supply outlet. Where the highest water supply outlet is located above the source of supply, deduct 0.5 psi (3.4 kPa) for each foot (0.3 m) of difference in elevation. Where the highest water supply outlet is located below the source of supply, add 0.5 psi (3.4 kPa) for each foot (0.3 m) of difference in elevation.
   2.2. Where a water pressure-reducing valve is installed in the water distribution system, the minimum daily static water pressure available is 80 percent of the minimum daily static water pressure at the source of supply or the set pressure downstream of the water pressure-reducing valve, whichever is smaller.
   2.3. Deduct all pressure losses caused by special equipment, such as a backflow preventer, water filter and water softener. Pressure loss data for each piece of equipment shall be obtained through the manufacturer of the device.
   2.4. Deduct the pressure in excess of 8 psi (55 kPa) resulting from the installation of the special plumbing fixture, such as temperature-controlled shower and flushometer tank water closet. Using the resulting minimum available pressure, find the corresponding pressure range in Table AP201.1.
3. The maximum developed length for water piping is the actual length of pipe between the source of supply and the most remote fixture, including either hot (through the water heater) or cold water branches multiplied by a factor of 1.2 to compensate for pressure loss through fittings. Select the appropriate column in Table AP201.1 equal to or greater than the calculated maximum developed length.
4. To determine the size of the water service pipe, meter and main distribution pipe to the building using the appropriate table, follow down the selected "maximum developed length" column to a fixture unit equal to or greater than the total installation demand calculated by using the "combined" w.s.f.u. column of Table AP201.1. Read the water service pipe and meter sizes in the first left-hand column and the main distribution pipe to the building in the second left-hand column on the same row.
5. To determine the size of each water distribution pipe, start at the most remote outlet on each branch (either hot or cold branch) and, working back toward the main distribution pipe to the building, add up the w.s.f.u. demand passing through each segment of the distribution system using the related hot or cold column of Table AP201.1. Knowing demand, the size of each segment shall be read from the second left-hand column of the same table and the maximum developed length column selected in Steps 1 and 2, under the same or next smaller size meter row. In no case does the size of any branch or main need to be larger that the size of the main distribution pipe to the building established in Step 4.

TABLE AP201.1
MINIMUM SIZE OF WATER METERS, MAINS AND DISTRIBUTION PIPING BASED ON WATER SUPPLY FIXTURE UNIT VALUES (w.s.f.u.)

METER AND SERVICE PIPE (inches)	DISTRIBUTION PIPE (inches)	MAXIMUM DEVELOPMENT LENGTH (feet)									
Pressure Range 30 to 39 psi		40	60	80	100	150	200	250	300	400	500
3/4	1/2[a]	2.5	2	1.5	1.5	1	1	0.5	0.5	0	0
3/4	3/4	9.5	7.5	6	5.5	4	3.5	3	2.5	2	1.5
3/4	1	32	25	20	16.5	11	9	7.8	6.5	5.5	4.5
1	1	32	32	27	21	13.5	10	8	7	5.5	5
3/4	1 1/4	32	32	32	32	30	24	20	17	13	10.5
1	1 1/4	80	80	70	61	45	34	27	22	16	12
1 1/2	1 1/4	80	80	80	75	54	40	31	25	17.5	13
1	1 1/2	87	87	87	87	84	73	64	56	45	36
1 1/2	1 1/2	151	151	151	151	117	92	79	69	54	43
2	1 1/2	151	151	151	151	128	99	83	72	56	45
1	2	87	87	87	87	87	87	87	87	87	86
1 1/2	2	275	275	275	275	258	223	196	174	144	122
2	2	365	365	365	365	318	266	229	201	160	134
2	2 1/2	533	533	533	533	533	495	448	409	353	311

METER AND SERVICE PIPE (inches)	DISTRIBUTION PIPE (inches)	MAXIMUM DEVELOPMENT LENGTH (feet)									
Pressure Range 40 to 49 psi		40	60	80	100	150	200	250	300	400	500
3/4	1/2[a]	3	2.5	2	1.5	1.5	1	1	0.5	0.5	0.5
3/4	3/4	9.5	9.5	8.5	7	5.5	4.5	3.5	3	2.5	2
3/4	1	32	32	32	26	18	13.5	10.5	9	7.5	6
1	1	32	32	32	32	21	15	11.5	9.5	7.5	6.5
3/4	1 1/4	32	32	32	32	32	32	32	27	21	16.5
1	1 1/4	80	80	80	80	65	52	42	35	26	20
1 1/2	1 1/4	80	80	80	80	75	59	48	39	28	21
1	1 1/2	87	87	87	87	87	87	87	78	65	55
1 1/2	1 1/2	151	151	151	151	151	130	109	93	75	63
2	1 1/2	151	151	151	151	151	139	115	98	77	64
1	2	87	87	87	87	87	87	87	87	87	87
1 1/2	2	275	275	275	275	275	275	264	238	198	169
2	2	365	365	365	365	365	349	304	270	220	185
2	2 1/2	533	533	533	533	533	533	533	528	456	403

(continued)

TABLE AP201.1—continued
MINIMUM SIZE OF WATER METERS, MAINS AND DISTRIBUTION PIPING BASED ON WATER SUPPLY FIXTURE UNIT VALUES (w.s.f.u.)

METER AND SERVICE PIPE (inches)	DISTRIBUTION PIPE (inches)	MAXIMUM DEVELOPMENT LENGTH (feet)									
Pressure Range 50 to 60 psi		40	60	80	100	150	200	250	300	400	500
3/4	1/2[a]	3	3	2.5	2	1.5	1	1	1	0.5	0.5
3/4	3/4	9.5	9.5	9.5	8.5	6.5	5	4.5	4	3	2.5
3/4	1	32	32	32	32	25	18.5	14.5	12	9.5	8
1	1	32	32	32	32	30	22	16.5	13	10	8
3/4	1 1/4	32	32	32	32	32	32	32	32	29	24
1	1 1/4	80	80	80	80	80	68	57	48	35	28
1 1/2	1 1/4	80	80	80	80	80	75	63	53	39	29
1	1 1/2	87	87	87	87	87	87	87	87	82	70
1 1/2	1 1/2	151	151	151	151	151	151	139	120	94	79
2	1 1/2	151	151	151	151	151	151	146	126	97	81
1	2	87	87	87	87	87	87	87	87	87	87
1 1/2	2	275	275	275	275	275	275	275	275	247	213
2	2	365	365	365	365	365	365	365	329	272	232
2	2 1/2	533	533	533	533	533	533	533	533	533	486

METER AND SERVICE PIPE (inches)	DISTRIBUTION PIPE (inches)	MAXIMUM DEVELOPMENT LENGTH (feet)									
Pressure Range Over 60		40	60	80	100	150	200	250	300	400	500
3/4	1/2[a]	3	3	3	2.5	2	1.5	1.5	1	1	0.5
3/4	3/4	9.5	9.5	9.5	9.5	7.5	6	5	4.5	3.5	3
3/4	1	32	32	32	32	32	24	19.5	15.5	11.5	9.5
1	1	32	32	32	32	32	28	28	17	12	9.5
3/4	1 1/4	32	32	32	32	32	32	32	32	32	30
1	1 1/4	80	80	80	80	80	80	69	60	46	36
1 1/2	1 1/4	80	80	80	80	80	80	76	65	50	38
1	1 1/2	87	87	87	87	87	87	87	87	87	84
1 1/2	1 1/2	151	151	151	151	151	151	151	144	114	94
2	1 1/2	151	151	151	151	151	151	151	151	118	97
1	2	87	87	87	87	87	87	87	87	87	87
1 1/2	2	275	275	275	275	275	275	275	275	275	252
2	2	365	368	368	368	368	368	368	368	318	273
2	2 1/2	533	533	533	533	533	533	533	533	533	533

For SI: 1 inch = 25.4, 1 foot = 304.8 mm, 1 pound per square inch = 6.895 kPa.
a. Minimum size for building supply is a 3/4-inch pipe.

CALIFORNIA RESIDENTIAL CODE – MATRIX ADOPTION TABLE APPENDIX Q – ICC INTERNATIONAL RESIDENTIAL CODE ELECTRICAL PROVISIONS/NATIONAL ELECTRICAL CODE CROSS REFERENCE

(Matrix Adoption Tables are non-regulatory, intended only as an aid to the user.
See Chapter 1 for state agency authority and building applications.)

Adopting agency	BSC	SFM	HCD			DSA		OSHPD				BSCC	DHS	AGR	DWR	CEC	CA	SL	SLC
			1	2	1/AC	AC	SS	1	2	3	4								
Adopt entire chapter																			
Adopt entire chapter as amended (amended sections listed below)																			
Adopt only those sections that are listed below																			
[California Code of Regulations, Title 19, Division 1]																			
Chapter / Section																			

* The California Code of Regulations (CCR), Title 19, Division 1 provisions that are found in the *California Fire Code* are a reprint from the current CCR, Title 19, Division 1 text for the code user's convenience only. The scope, applicability and appeals procedures of CCR, Title 19, Division I remain the same.

APPENDIX Q

ICC *INTERNATIONAL RESIDENTIAL CODE* ELECTRICAL PROVISIONS/*NATIONAL ELECTRICAL CODE* CROSS REFERENCE

(This appendix is informative and is not part of the code. This table is a cross reference of Chapters 34 through 43 of this code, and the 2011 *National Electrical Code*, NFPA 70).

California Residential Code		*National Electrical Code*
CHAPTER 34	**GENERAL REQUIREMENTS**	
SECTION E3401	**GENERAL**	
E3401.1	Applicability	None
E3401.2	Scope	90.2
E3401.3	Not covered	90.2
E3401.4	Additions and alterations	None
SECTION E3402	**BUILDING STRUCTURE PROTECTION**	
E3402.1	Drilling and notching	None
E3402.2	Penetrations of fire-resistance-rated assemblies	300.21
E3402.3	Penetrations of firestops and draftstops	300.21
SECTION E3403	**INSPECTION AND APPROVAL**	
E3403.1	Approval	110.2
E3403.2	Inspection required	None
E3403.3	Listing and labeling	110.3
SECTION E3404	**GENERAL EQUIPMENT REQUIREMENTS**	
E3404.1	Voltages	110.4
E3404.2	Interrupting rating	110.9
E3404.3	Circuit characteristics	110.10
E3404.4	Enclosure types	
E3404.5	Protection of equipment	110.11

E3404.6	Unused openings	110.12(A)
E3404.7	Integrity of electrical equipment	110.12(B)
E3404.8	Mounting	110.13(A)
E3404.9	Energized parts guarded against accidental contact	110.27(A)
E3404.10	Prevent physical damage	110.27(B)
E3404.11	Equipment identification	110.21
E3404.12	Identification of disconnecting means	110.22
SECTION E3405	**EQUIPMENT LOCATION AND CLEARANCES**	
E3405.1	Working space and clearances	110.26
Figure E3405.1	Working space and clearances	110.26(A)
	Footnote 1	110.26(E)(1)(a)
	Footnote 2	110.26(A)(3)
	Footnote 3	110.26(B)
	Footnote 4	230.70(A); 240.24(D), (E) and (F); Note 5
	Footnote 5	110.26(D)
E3405.2	Working clearances for energized equipment and panelboards	110.26(A)(1), (2) and (3)
E3405.3	Dedicated panelboard space	110.26(F)(1)(a)
E3405.4	Location of working spaces and equipment	110.26(B); 230.70(A); and 240.24(D), (E) and (F)
E3405.5	Access and entrance to working space	110.26(C)(1)
E3405.6	Illumination	110.26(D)
SECTION E3406	**ELECTRICAL CONDUCTORS AND CONNECTIONS**	
E3406.1	General	Articles 110, 300 and 310
E3406.2	Conductor material	110.5
E3406.3	Minimum size of conductors	310.106(A)
E3406.4	Stranded conductors	310.106(C)
E3406.5	Individual conductor insulation	310.10(B) and (C); and 310.106(D)
E3406.6	Conductors in parallel	310.10(H)(2)
E3406.7	Conductors of the same circuit	300.3(B)
E3406.8	Aluminum and copper connections	110.14
E3406.9	Fine stranded conductors	110.14
Table E3406.9	Conductor stranding	Chapter 9, Table 10
E3406.10	Terminals	110.14(A)
E3406.11	Splices	110.14(B)
E3406.11.1	Continuity	300.13(A)
	Exception	300.13(A)
E3406.11.2	Device connections	250.148(B) and 300.13(B)
E3406.11.3	Length of conductor for splice or termination	300.14
E3406.12	Grounded conductor continuity	200.2(B)
SECTION E3407	**CONDUCTOR IDENTIFICATION**	
E3407.1	Grounded conductors	200.6(A) and (B); and 310.110(A)
E3407.2	Equipment grounding conductors	250.119 and 310.110(B)
E3407.3	Ungrounded conductors	200.7(C)(1) and 310.110(C), Exception
E3407.4	Identification of terminals	200.10

E3407.4.1	Device terminals	200.10(A)
E3407.4.2	Receptacles, plugs and connectors	200.10(B)
CHAPTER 35	**ELECTRICAL DEFINITIONS**	
SECTION 3501	**GENERAL**	Article 100, Definitions
CHAPTER 36	**SERVICES**	
SECTION E3601	**GENERAL SERVICES**	
E3601.1	Scope	230.1
E3601.2	Number of services	230.2
E3601.3	One building or other structure not to be supplied through another	230.3
E3601.4	Other conductors in raceway or cable	230.7
E3601.5	Raceway seal	230.8
E3601.6	Service disconnect required	230.70
E3601.6.1	Marking of service equipment and disconnects	230.66 and 230.70(B)
E3601.6.2	Service disconnect location	230.70(A) and 230.72(C)
E3601.7	Maximum number of disconnects	230.71(A)
SECTION E3602	**SERVICE SIZE AND RATING**	
E3602.1	Ampacity of ungrounded conductors	230.79(C) and (D)
E3602.2	Service load	220.82(A)
Table E3602.2	Minimum service load calculation	220.82(B) and (C)
E3602.2.1	Services under 100 amperes	None
E3602.3	Rating of service disconnect	230.79 and 230.80
E3602.4	Voltage rating	220.82(A)
SECTION E3603	**SERVICE, FEEDER AND GROUNDING ELECTRODE CONDUCTOR SIZING**	
E3603.1	Grounded and ungrounded service conductor size	310.15(B)(7)
Table E3603.1	Service conductor and grounding electrode conductor sizing	Table 310.15(B)(7) and Table 250.66
	Footnote a	250.64(E)
	Footnote b	250.64(B)
	Footnote c	250.64(B)
	Footnote d	250.66(A) and (B)
E3603.2	Ungrounded service conductors for accessory buildings and structures	230.79(D)
	Exception 1	230.42 and 230.79(A)
	Exception 2	230.42 and 230.79(B)
E3603.3	Overload protection	230.90
E3603.3.1	Ungrounded conductor	230.90(A)
	Exception	230.90(A), Exception 3
E3603.3.2	Not in grounded conductor	230.90(B)
E3603.3.3	Location	230.91
E3603.4	Grounding electrode conductor size	250.66
E3603.5	Temperature limitations	110.14(C)(1)
SECTION E3604	**OVERHEAD SERVICE AND SERVICE-ENTRANCE CONDUCTOR INSTALLATION**	
E3604.1	Clearances on buildings	230.9
Figure E3604.1	Clearances from building openings	230.9
E3604.2	Vertical clearances	230.24

E3604.2.1	Above roofs	230.24(A)
	Exception 1	230.24(A), Exception 1
	Exception 2	230.24(A), Exception 2
	Exception 3	230.24(A), Exception 3
	Exception 4	230.24(A), Exception 4
	Exception 5	230.24(A), Exception 5
Figure E3604.2.1	Clearances from roofs	230.24
E3604.2.2	Vertical clearance from grade	230.24(B)
	Item 1	230.24(B)(1)
	Item 2	230.24(B)(2)
	Item 3	230.24(B)(4)
E3604.3	Point of attachment	230.26
E3604.4	Means of attachment	230.27
E3604.5	Service masts as supports	230.28
E3604.6	Supports over buildings	230.29
SECTION E3605	**SERVICE-ENTRANCE CONDUCTORS**	
E3605.1	Insulation of service-entrance conductors	230.41
	Exception 1	230.41, Exception
	Exception 2	230.41, Exception
E3605.2	Wiring methods for services	230.43
E3605.3	Spliced conductors	230.46
E3605.4	Protection of underground service entrance conductors	230.50(A)
E3605.5	Protection of service cables against damage	230.50(B)
E3605.6	Direct sunlight exposure	310.10(D)
E3605.7	Mounting supports	230.51
E3605.8	Raceways to drain	230.53
E3605.9	Overhead service locations	230.54
E3605.9.1	Rain-tight service head	230.54(A)
E3605.9.2	Service cable, service head or gooseneck	230.54(B)
E3605.9.3	Service head location	230.54(C)
	Exception	230.54(C), Exception
E3605.9.4	Separately bushed openings	230.54(E)
E3605.9.5	Drip loops	230.54(F)
E3605.9.6	Conductor arrangement	230.54(G)
E3605.9.7	Secured	230.54(D)
SECTION E3606	**SERVICE EQUIPMENT—GENERAL**	
E3606.1	Service equipment enclosures	230.62
E3606.2	Working space	110.26
E3606.3	Available short-circuit current	110.9
E3606.4	Marking	230.66
SECTION E3607	**SYSTEM GROUNDING**	
E3607.1	System service ground	250.20(B)(1) and 250.24(A)
E3607.2	Location of grounding electrode conductor connection	250.24(A)(1) and (A)(5)
E3607.3	Buildings or structures supplied by feeder(s) or branch circuit(s)	250.32(A)
	Exception	250.32(A), Exception

E3607.3.1	Equipment grounding conductor	250.32(B) and Table 250.122
E3607.3.2	Grounded conductor.	250.32(B)(1), Exception
E3607.4	Grounding electrode conductor	250.24(D)
E3607.5	Main bonding jumper	250.24(B)
E3607.6	Common grounding electrode	250.58
SECTION E3608	**GROUNDING ELECTRODE SYSTEM**	
E3608.1	Grounding electrode system	250.50
	Exception	250.50, Exception
E3608.1.1	Metal underground water pipe	250.52(A)(1)
E3608.1.1.1	Interior metal water piping	250.68(C)(1)
E3608.1.1.2	Installation	250.53(D) and 250.53(E)
E3608.1.2	Concrete-encased electrode	250.52(A)(3)
E3608.1.3	Ground rings	250.52(A)(4) and 250.53(F)
E3608.1.4	Rod and pipe electrodes	250.52(A)(5)
E3608.1.4.1	Installation	250.53(G)
E3608.1.5	Plate electrodes	250.52(A)(7) and 250.53(H)
E3608.1.6	Other listed electrodes	250.52(A)(6)
E3608.2	Bonding jumper	250.53(C)
E3608.3	Rod, pipe and plate electrode requirements	250.53(A), (B) and (E)
E3608.4	Supplemental electrode required	250.53(A)(2) and (A)(3)
E3608.5	Aluminum electrodes	250.52(B)(2)
E3608.6	Metal underground gas piping system	250.52(B)(1)
SECTION E3609	**BONDING**	
E3609.1	General	250.90
E3609.2	Bonding of service equipment	250.92(A)
E3609.3	Bonding to other systems	250.94
E3609.4	Method of bonding at the service	250.92(B)
E3609.4.1	Grounded service conductor	250.92(B)(1)
E3609.4.2	Threaded connections	250.92(B)(2)
E3609.4.3	Threadless couplings and connectors	250.92(B)(3)
E3609.4.4	Other devices	250.92(B)(4)
E3609.5	Sizing bonding jumper on supply side of service and main bonding jumper	250.28(D) and 250.102(C)
E3609.6	Metal water piping bonding	250.104(A)
E3609.7	Bonding other metal piping	250.104(B)
SECTION E3610	**GROUNDING ELECTRODE CONDUCTORS**	
E3610.1	Continuous	250.64(C) and (F)
E3610.2	Securing and protection against physical damage	250.64(A) and (B)
E3610.3	Enclosures for grounding electrode conductors	250.64(E)
E3610.4	Prohibited use	250.121
SECTION E3611	**GROUNDING ELECTRODE CONDUCTOR CONNECTION TO GROUNDING ELECTRODES**	
E3611.1	Methods of grounding connection to electrodes.	250.70
E3611.2	Accessibility	250.68(A)

E3611.3	Effective grounding path	250.68(B)
E3611.4	Interior metal water piping	250.68(C)(1)
E3611.5	Protection of ground clamps and fittings	250.10
E3611.6	Clean surfaces	250.12
CHAPTER 37	**BRANCH-CIRCUIT AND FEEDER REQUIREMENTS**	
SECTION E3701	**GENERAL**	
E3701.1	Scope	None
E3701.2	Branch-circuit and feeder ampacity	210.19(A) and 215.2(A)(1)
E3701.3	Selection of ampacity	310.15(A)(2), Exception
E3701.4	Branch circuits with more than one receptacle	210.19(A)(2)
E3701.5	Multiwire branch circuits	210.4
E3701.5.1	Disconnecting means	210.4(B)
E3701.5.2	Grouping	210.4(D)
SECTION E3702	**BRANCH-CIRCUIT RATINGS**	
E3702.1	Branch-circuit voltage limitations	210.6(A), (B) and (C)
E3702.2	Branch-circuit ampere rating	210.3
E3702.3	Fifteen- and 20-ampere branch circuits	210.23(A)
E3702.4	Thirty-ampere branch circuits	210.23(B)
E3702.5	Branch circuits serving multiple loads or outlets	210.23(A)
E3702.6	Branch circuits serving a single motor	430.22(A)
E3702.7	Branch circuits serving motor-operated and combination loads	220.18(A)
E3702.8	Branch-circuit inductive lighting loads	220.18(B)
E3702.9	Branch-circuit load for ranges and cooking appliances	Table 220.55, Note 4
E3702.9.1	Minimum branch circuit for ranges	210.19(A)(3)
E3702.10	Branch circuits serving heating loads	422.13; and 424.3(A) and (B)
E3702.11	Branch circuits for air-conditioning and heat pump equipment	440.4(B), 440.35 and 440.62(A)
E3702.12	Branch circuits serving room air conditioners	440.62(A)
E3702.12.1	Where no other loads are supplied	440.62(B)
E3702.12.2	Where lighting units or other appliances are also supplied	440.62(C)
E3702.13	Branch-circuit requirement—summary	210.24 and 210.25
Table E3702.13	Branch-circuit requirement—summary	Table 210.24
SECTION E3703	**REQUIRED BRANCH CIRCUITS**	
E3703.1	Branch circuits for heating	422.12 and 422.12, Exceptions 1 and 2
E3703.2	Kitchen and dining area receptacles	210.52 (B)(1)
E3703.3	Laundry circuit	210.11(C)(2); and 210.23(A), Exception
E3703.4	Bathroom branch circuits	210.11(C)(3)
E3703.5	Number of branch circuits	210.11(A)
E3703.6	Branch-circuit load proportioning	210.11(B)
SECTION E3704	**FEEDER REQUIREMENTS**	
E3704.1	Conductor size	215.2 (A)(3) and (A)(4); 220.40; and Table 310.15(B)(7)
E3704.2	Feeder loads	220.40
Table E3704.2(1)	Feeder load calculation	Table 220.12, 220.14, Table 220.42(C), 220.50, 220.51, 220.52, 220.53, 220.54, 220.55 and 220.60

Table E3704.2(2)	Demand loads for electric ranges, wall-mounted ovens, counter-mounted cooking units and other cooking appliances over 13/4 kVA rating	Table 220.55
E3704.3	Feeder neutral load	220.61
E3704.4	Lighting and general use receptacle load	220.12, Table 220.12 and 220.14(J)
E3704.5	Ampacity and calculated loads	220.40
E3704.6	Equipment grounding conductor	215.6
SECTION E3705	**CONDUCTOR SIZING AND OVERCURRENT PROTECTION**	
E3705.1	General	310.15(A)
Table E3705.1	Allowable ampacities	Table 310.15(B)(16)
E3705.2	Correction factors for ambient temperatures	Table 310.15(B)(16)
Table E3705.2	Ambient temperature correction factors	Table 310.15(B)(2)(a)
E3705.3	Adjustment factor for conductor proximity	310.15(B)(3)(a)
Table E3705.3	Conductor proximity adjustment factors	Table 310.15(B)(3)(a)
E3705.4	Temperature limitations	110.14(C)
E3705.4.1	Conductors rated 60°C	110.14(C)(1)(a)
E3705.4.2	Conductors rated 75°C	110.14(C)(1)(b)
E3705.4.3	Separately installed pressure connectors	110.14(C)(2)
E3705.4.4	Conductors of Type NM cable	334.80 and 334.112
E3705.5	Overcurrent protection required	240.4, 240.21 and Table 310.15(B)(6)
E3705.5.1	Cords	240.5
E3705.5.2	Overcurrent devices of the next higher size	240.4(B)
E3705.5.3	Small conductors	240.4(D)
E3705.5.4	Air-conditioning and heat pump equipment	240.4(G)
E3705.6	Fuses and fixed-trip circuit breakers	240.6
E3705.7	Location of overcurrent devices in or on premises	240.24(A), (C), (D), (E) and (F)
E3705.8	Ready access for occupants	240.24(B)
E3705.9	Enclosures for overcurrent devices	240.30(A) and (B)
SECTION E3706	**PANELBOARDS**	
E3706.1	Panelboard rating	408.30
E3706.2	Panelboard circuit identification	408.4
E3706.3	Panelboard overcurrent protection	408.36
E3706.4	Grounded conductor terminations	408.41
E3706.5	Back-fed devices	408.36(D)
CHAPTER 38	**WIRING METHODS**	
SECTION E3801	**GENERAL REQUIREMENTS**	
E3801.1	Scope	300.1
E3801.2	Allowable wiring methods	110.8 and 300.3(A)
Table E3801.2	Allowable wiring methods	None
E3801.3	Circuit conductors	300.3(B)
E3801.4	Wiring method applications	Chapter 3 and 300.2
Table E3801.4	Allowable applications for wiring methods	Chapter 3 and 300.2
SECTION E3802	**ABOVE-GROUND INSTALLATION REQUIREMENTS**	
E3802.1	Installation and support requirements	Chapter 3
Table E3802.1	General installation and support requirements for wiring methods	Chapter 3
E3802.2	Cables in accessible attics	320.23 and 334.23

E3802.2.1	Across structural members	320.23(A) and 334.23
E3802.2.2	Cable installed through or parallel to framing members	320.23(B)
E3802.3	Exposed cable	320.15 and 334.15
E3802.3.1	Surface installation	334.15(A)
E3802.3.2	Protection from physical damage	334.15(B)
E3802.3.3	Locations exposed to direct sunlight	310.10(D)
E3802.4	In unfinished basements	334.15(C)
E3802.5	Bends	334.24 and 338.24
E3802.6	Raceways exposed to different temperatures	300.7(A)
E3802.7	Raceways in wet locations above grade	300.9
SECTION E3803	**UNDERGROUND INSTALLATION REQUIREMENTS**	
E3803.1	Minimum cover requirements	300.5(A)
Table E3803.1	Minimum cover requirements, burial in inches	Table 300.5
E3803.2	Warning ribbon	300.5(D)(3)
E3803.3	Protection from damage	300.5(D)
E3803.4	Splices and taps	300.5(E)
E3803.5	Backfill	300.5(F)
E3803.6	Raceway seals	300.5(G)
E3803.7	Bushing	300.5(H)
E3803.8	Single conductors	300.5(I)
E3803.9	Ground movement	300.5(J)
E3803.10	Wet locations	300.5(B)
E3803.11	Under buildings	300.5(C)
CHAPTER 39	**POWER AND LIGHTING DISTRIBUTION**	
SECTION E3901	**RECEPTACLE OUTLETS**	
E3901.1	General	210.50 and 210.52
E3901.2	General-purpose receptacle distribution	210.52(A)
E3901.2.1	Spacing	210.52(A)(2)
E3902.2.2	Wall space	210.52(A)(2)
E3901.2.3	Floor receptacles	210.52(A)(3)
E3901.2.4	Countertop receptacles	210.52(A)(4)
E3901.3	Small appliance receptacles	210.52(B)(1)
E3901.3.1	Other outlets prohibited	210.52(B)(2)
E3901.3.2	Limitations	210.52(B)(3)
E3901.4	Countertop receptacles	210.52(C)
E3901.4.1	Wall counter space	210.52(C)(1)
E3901.4.2	Island counter spaces	210.52(C)(2)
E3901.4.3	Peninsular counter space	210.52(C)(3)
E3901.4.4	Separate spaces	210.52(C)(4)
E3901.4.5	Receptacle outlet location	210.52(C)(5)
E3901.5	Appliance receptacle outlets	210.50(C)
E3901.6	Bathroom	210.52(D) and 406.5(E)
E3901.7	Outdoor outlets	210.52(E)
E3901.8	Laundry areas	210.52(F)

E3901.9 Basements and garages . . . . . 210.52(G)
E3901.10 Hallways . . . . . 210.52(H)
E3901.11 Foyers . . . . . 210.52(I)
HVAC outlet 210.63

SECTION E3902 GROUND-FAULT AND ARC-FAULT CIRCUIT-INTERRUPTER PROTECTION

E3902.1 Bathroom receptacles . . . . . 210.8(A)(1)
E3902.2 Garage and accessory building receptacles . . . . . 210.8(A)(2)
E3902.3 Outdoor receptacles . . . . . 210.8(A)(3)
E3902.4 Crawl space receptacles . . . . . 210.8(A)(4)
E3902.5 Unfinished basement receptacles . . . . . 210.8(A)(5)
E3902.6 Kitchen receptacles . . . . . 210.8(A)(6)
E3902.7 Sink receptacles . . . . . 210.8(A)(7) and 406.5(E)
E3902.8 Boathouse receptacles . . . . . 210.8(A)(8)
E3902.9 Boat hoists . . . . . 210.8(C)
E3902.10 Electrically heated floors . . . . . 424.44(G)
E3902.11 Location of ground-fault circuit interrupters 210.8
E3902.12 Arc-fault circuit-interrupter protection . . . . . 210.12(A)
E3902.13 Arc-fault circuit-interrupter protection for branch-circuit extensions or modifications . . . . . 210.12(B)

SECTION E3903 LIGHTING OUTLETS

E3903.1 General . . . . . 210.70(A)
E3903.2 Habitable rooms . . . . . 210.70(A)(1)
E3903.3 Additional locations . . . . . 210.70(A)(2)
E3903.4 Storage or equipment spaces . . . . . 210.70(A)(3)

SECTION E3904 GENERAL INSTALLATION REQUIREMENTS

E3904.1 Electrical continuity of metal raceways and enclosures 300.10
E3904.2 Mechanical continuity—raceways and cables 300.12
E3904.3 Securing and supporting . . . . . 300.11(A)
E3904.3.1 Prohibited means of support . . . . . 300.11(C)
E3904.4 Raceways as means of support . . . . . 300.11(B)
E3904.5 Raceway installations 300.18
E3904.6 Conduit and tubing fill . . . . . 300.17; Chapter 9, Table 1; and Annex C
Tables E3904.6(1)–E3904.6(10) Maximum number of conductors in conduit or tubing . . 300.17; and Chapter 9, Table 1, Note 1
E3904.7 Air handling—stud cavity and joist spaces . . . . . 300.22(C), Exception

CHAPTER E3905 BOXES, CONDUIT BODIES AND FITTINGS

E3905.1 Box, conduit body or fitting—where required 300.15
E3905.1.1 Equipment . . . . . 300.15(B)
E3905.1.2 Protection . . . . . 300.15(C)
E3905.1.3 Integral enclosure . . . . . 300.15(E)
E3905.1.4 Fitting . . . . . 300.15(F)
E3905.1.5 Buried conductors . . . . . 300.15(G)
E3905.1.6 Luminaires . . . . . 300.15(J)
E3905.2 Metal boxes 314.4
E3905.3 Nonmetallic boxes 314.3

E3905.3.1	Nonmetallic-sheathed cable and nonmetallic boxes	314.17(C)
E3905.3.2	Securing to box	314.17(C)
E3905.3.3	Conductor rating	314.17(C)
E3905.4	Minimum depth of outlet boxes	314.24
E3905.4.1	Outlet boxes without enclosed devices	
E3905.4.2	Utilization equipment	
E3905.5	Boxes enclosing flush-mounted devices	314.19
E3905.6	Boxes at luminaire (lighting fixture) outlets	314.27(A)(1) and(2)
E3905.6.1	Wall outlets	
E3905.6.2	Ceiling outlets	
E3905.7	Floor boxes	314.27(C)
E3905.8	Boxes at fan outlets	314.27(D)
E3905.9	Utilization equipment	314.27(E)
E3905.10	Conduit bodies, junction, pull and outlet boxes to be accessible	314.29
E3905.11	Damp or wet locations	314.15
E3905.12	Number of conductors in outlet, device, and junction boxes and conduit boxes	314.16
E3905.12.1	Box volume calculations	314.16(A)
Table E3905.12.1	Maximum number of conductors in metal boxes	Table 314.16
E3905.12.1.1	Standard boxes	314.16(A)(1)
E3905.12.1.2	Other boxes	314.16(A)(2)
E3905.12.2	Box fill calculations	314.16(B)
E3905.12.2.1	Conductor fill	Table 314.16 and 314.16(B)(1)
Table E3905.12.2.1	Volume allowance required per conductor	Table 314.16(B)
E3905.12.2.2	Clamp fill	314.16(B)(2)
E3905.12.2.3	Support fittings fill	314.16(B)(3)
E3905.12.2.4	Device or equipment fill	314.16(B)(4)
E3905.12.2.5	Equipment grounding conductor fill	314.16(B)(5)
E3905.12.3	Conduit bodies	314.16(C)(1)
E3905.12.3.1	Splices, taps or devices	314.16(C)(2)
E3905.12.3.2	Short radius conduit bodies	314.16(C)(3)
SECTION E3906	**INSTALLATION OF BOXES, CONDUIT BODIES AND FITTINGS**	
E3906.1	Conductors entering boxes, conduit bodies or fittings	314.17
E3906.1.1	Insulated fittings	300.4(G)
E3906.2	Openings	314.17(A)
E3906.3	Metal boxes, conduit bodies and fittings	314.17(B)
E3906.4	Unused openings	110.12(A)
E3906.5	In wall or ceiling	314.20
E3906.6	Noncombustible surfaces	314.21
E3906.7	Surface extensions	314.22
E3906.8	Supports	314.23
E3906.8.1	Surface mounting	314.23(A)
E3906.8.2	Structural mounting	314.23(B)
E3906.8.2.1	Nails and screws	314.23(B)(1)
E3906.8.2.2	Braces	314.23(B)(2)

E3906.8.3	Mounting in finished surfaces	314.23(C)
E3906.8.4	Raceway supported enclosures without devices or fixtures	314.23(E)
E3906.8.5	Raceway supported enclosures with devices or fixtures	314.23(F)
E3906.8.6	Enclosures in concrete or masonry	314.23(G)
E3906.9	Covers and canopies	314.25
E3906.10	Metal covers and plates	314.25(A)
E3906.11	Exposed combustible finish	314.25(B)
SECTION E3907	**CABINETS AND PANELBOARDS**	
E3907.1	Switch and overcurrent device enclosures	312.8
E3907.2	Damp or wet locations	312.2
E3907.3	Position in wall	312.3
E3907.4	Repairing noncombustible surfaces	312.4
E3907.5	Unused openings	110.12(A) and 408.7
E3907.6	Conductors entering cabinets	300.4(G) and 312.5(B)
E3907.7	Openings to be closed	312.5(A)
E3907.8	Cables	312.5(C)
SECTION E3908	**GROUNDING**	
E3908.1	Metal enclosures	250.86
E3908.2	Equipment fastened in place or connected by permanent wiring methods (fixed)	250.110(1), (2) and (3)
E3908.3	Specific equipment fastened in place or connected by permanent wiring methods	250.112(J), (L) and (M)
E3908.4	Effective ground-fault current path	250.4(A)(5)
E3908.5	Earth as a ground-fault current path	250.4(A)(5)
E3908.6	Load-side grounded conductor	250.24(A)(5)
E3908.7	Load-side equipment	250.142(B)
E3908.8	Types of equipment grounding conductors	250.118
E3908.8.1	Flexible metal conduit	250.118(5)
E3908.8.2	Liquid-tight flexible metal conduit	250.118(6)
E3908.8.3	Nonmetallic sheathed cable (Type NM)	334.108
E3908.9	Equipment fastened in place or connected by permanent wiring methods	250.134
E3908.10	Methods of equipment grounding	250 Part (VII)
E3908.11	Equipment grounding conductor installation	250.120
E3908.12	Equipment grounding conductor size	250.122(A) and (B)
Table E3908.12	Equipment grounding conductor sizing	Table 250.122
E3908.12.1	Multiple circuits	250.122(C)
E3908.13	Continuity and attachment of equipment grounding conductors to boxes	250.148
E3908.14	Connecting receptacle grounding terminal to box	250.146(A), (B) and (C)
E3908.15	Metal boxes	250.8 and 250.148(C)
E3908.16	Nonmetallic boxes	250.148(D)
E3908.17	Clean surfaces	250.12
E3908.18	Bonding other enclosures	250.96(A)
E3908.19	Size of equipment bonding jumper on load side of service	250.102(D) and 250.122

E3908.20	Installation—equipment bonding jumper	250.102(E)
E3908.20.1	Inside raceway or enclosure	
E3908.20.2	Outside raceway or enclosure	
E3908.20.3	Protection	
SECTION E3909	**FLEXIBLE CORDS**	
E3909.1	Where permitted	400.7 and 400.8
E3909.2	Loading and protection	240.4; 240.5(A) and 240.5(B)(1); 400.5; and 400.13
Table E3909.2	Maximum ampere load for flexible cords	Table 400.5(A)(1)
E3909.3	Splices	400.9
E3909.4	Attachment plugs	400.7(B)
CHAPTER 40	**DEVICES AND LIGHTING FIXTURES**	
SECTION E4001	**SWITCHES**	
E4001.1	Rating and application of snap switches	404.14(A)
E4001.2	CO/ALR snap switches	404.14(C)
E4001.3	Indicating	404.7
E4001.4	Time switches and similar devices	404.5
E4001.5	Grounding of enclosures	404.12
E4001.6	Access	404.8(A)
E4001.7	Damp or wet locations	404.4
E4001.8	Grounded conductors	404.2(B)
E4001.9	Switch connections	404.2(A)
E4001.10	Box mounted	404.10(B)
E4001.11	Snap switch faceplates	404.9(A)
E4001.11.1	Faceplate grounding	404.9(B)
E4001.12	Dimmer switches	404.14(E)
E4001.13	Multipole snap switches	404.8(C)
E4001.14	Cord- and plug-connected loads	401.14(F)
E4001.15	Switches controlling lighting loads	404.2(C)
SECTION E4002	**RECEPTACLES**	
E4002.1	Rating and type	406.3(A) and (B)
E4002.1.1	Single receptacle	210.21(B)(1)
E4002.1.2	Two or more receptacles	210.21(B)(3)
Table E4002.1.2	Receptacle ratings for various size multioutlet circuits	Table 210.21(B)(3)
E4002.2	Grounding type	406.4(A)
E4002.3	CO/ALR receptacles	406.3(C)
E4002.4	Faceplates	406.6(B)
E4002.5	Position of receptacle faces	406.5(D) and 406.6
E4002.6	Receptacles mounted in boxes	406.5(A) and 406.5(B)
E4002.7	Receptacles mounted on covers	406.5(C)
E4002.8	Damp locations	406.9(A)
E4002.9	15- and 20-ampere receptacles in wet locations	406.9(B)(1)
E4002.10	Other receptacles in wet locations	406.9(B)(2)
E4002.11	Bathtub and shower space	406.9(C)
E4002.12	Flush mounting with faceplate	406.9(E)

E4002.13	Exposed terminals	406.5(F)
E4002.14	Tamper-resistant receptacles	406.12
SECTION E4003	**LUMINAIRES**	
E4003.1	Energized parts	410.5
E4003.2	Luminaires near combustible material	410.11
E4003.3	Exposed conductive parts	410.42(A)
E4003.4	Screw-shell type	410.90
E4003.5	Recessed incandescent luminaires	410.115(C)
E4003.6	Thermal protection	410.130(E)(1)
E4003.7	High-intensity discharge luminaires	410.130(F)
E4003.8	Metal halide lamp containment	410.130(F)(5)
E4003.9	Wet or damp locations	410.10(A)
E4003.10	Lampholders in wet or damp locations	410.96
E4003.11	Bathtub and shower area	410.10(D)
E4003.12	Luminaires in clothes closets	410.2; and 410.16(A), (B), (C) and (D)
Figure E4003.12	Closet storage space	Figure 410.2
E4003.13	Luminaire wiring—general	410.48
E4003.13.1	Polarization of luminaires	410.50
E4003.13.2	Luminaires as raceways	410.64(A), (B) and (C)
SECTION E4004	**LUMINAIRE INSTALLATION**	
E4004.1	Outlet box covers	410.22
E4004.2	Combustible material at outlet boxes	410.23
E4004.3	Access	410.8
E4004.4	Supports	410.30(A)
E4004.5	Means of support	410.36(A)
E4004.6	Exposed components	410.136(A)
E4004.7	Combustible low-density cellulose fiberboard	410.136(B)
E4004.8	Recessed luminaire clearance	410.116(A)(1) and (2)
E4004.9	Recessed luminaire installation	410.116(B)
SECTION E4005	**TRACK LIGHTING**	
E4005.1	Installation	410.151(A) and (B)
E4005.2	Fittings	410.151(A) and (D)
E4005.3	Connected load	410.151(B)
E4005.4	Prohibited locations	410.151(C)
E4005.5	Fastening	410.154
E4005.6	Grounding	410.155(B)
CHAPTER 41	**APPLIANCE INSTALLATION**	
SECTION E4101	**GENERAL**	
E4101.1	Scope	422.1 and 424.1
E4101.2	Installation	110.3(B) and 422.17
E4101.3	Flexible cords	422.16
Table E4101.3	Flexible cord length	422.16(B)(1), (2) and (4)
E4101.4	Overcurrent protection	422.11
E4101.4.1	Single nonmotor-operated appliance	422.11(E)

E4101.5	Disconnecting means	422.30, 422.35 and 424.19
Table E4101.5	Disconnecting means	422.31(A), (B) and (C); 422.34; 422.35; 424.19; 424.20; and 440.14
E4101.6	Support of ceiling-suspended paddle fans	422.18
E4101.7	Snow-melting and deicing equipment protection	210.8(A)(3), Exception; and 426.28
CHAPTER 42	**SWIMMING POOLS**	
SECTION E4201	**GENERAL**	
E4201.1	Scope	680.1
E4201.2	Definitions	680.2
SECTION E4202	**WIRING METHODS FOR POOLS, SPAS, HOT TUBS AND HYDROMASSAGE BATH TUBS**	
E4202.1	General	680.7; 680.21(A); 680.23(B) and (F); 680.25(A); 680.40; 680.42; 680.43; and 680.70
E4202.2	Flexible cords	680.7(A) and (B); 680.22(B)(5); 680.23(B)(3); 680.42; and 680.43, Exception
E4202.3	Double-insulated pool pumps	680.21(B)
SECTION E4203	**EQUIPMENT LOCATION AND CLEARANCES**	
E4203.1	Receptacle outlets	680.22(A)(5)
E4203.1.1	Location	680.22(A)(1)
E4203.1.2	Where required	680.22.(A)(3)
E4203.1.3	GFCI protection	680.22(C)
E4203.1.4	Indoor locations	680.43(A) and (A)(1)
E4203.1.5	Indoor GFCI protection	680.43(A)(2)
E4203.2	Switching devices	680.22(D), 680.43(C) and 680.72
E4203.3	Disconnecting means	680.12
E4203.4	Luminaires and ceiling fans	680.22(B)
E4203.4.1	Outdoor location	680.22(B)(1)
E4203.4.2	Indoor location	680.22(B)(2)
E4203.4.3	Existing lighting outlets and luminaires	680.22(B)(3)
E4203.4.4	Indoor spas and hot tubs	680.43(B)
E4203.4.5	GFCI protection in adjacent areas	680.22(B)(4)
4203.5	Other outlets	680.22(D)
E4203.6	Overhead conductor clearances	680.8
Table E4203.6	Overhead conductor clearances	Table 680.8
E4203.7	Underground wiring	680.10
Table E4203.7	Underground wiring	Table 680.10
SECTION E4204	**BONDING**	
E4204.1	Performance	680.26(A)
E4204.2	Bonded parts	680.26(B); 680.26(E); 680.42(B); and 680.43(D)(4)
E4204.3	Pool water	680.26(C)
E4204.4	Bonding of outdoor hot tubs and spas	680.42 and 680.42(B)
E4204.5	Bonding of indoor hot tubs and spas	680.43(D)
E4204.5.1	Methods	680.43(E)
E4204.5.2	Connections	680.26(B)
SECTION E4205	**GROUNDING**	
E4205.1	Equipment to be grounded	680.6
E4205.2	Luminaires and related equipment	680.23(F)(2) and 680.24(F)

E4205.3	Nonmetallic conduit	680.23(B)(2)(b)
E4205.4	Flexible cords	680.23(B)(3)
E4205.5	Motors	680.21(A)(1) and (4)
E4205.6	Feeders	680.25(B) and (B)(1)
E4205.6.1	Separate buildings	680.25(B)(2)
E4205.7	Cord-connected equipment	680.7
E4205.8	Other equipment	Article 250, Parts V, VI and VII; and 680.6
SECTION E4206	**EQUIPMENT INSTALLATION**	
E4206.1	Transformers	680.23(A)(2)
E4206.2	Ground-fault circuit-interrupters	680.5
E4206.3	Wiring on load side of ground-fault circuit-interrupters and transformers	680.23(F)(3)
E4206.4	Underwater luminaires	680.23(A)(1), (3) and (7)
E4206.4.1	Maximum voltage	680.23(A)(4)
E4206.4.2	Luminaire location	680.23(A)(5) and (6)
E4206.5	Wet-niche luminaires	680.23(B)(1), (2), (4) and (5)
E4206.5.1	Servicing	680.23(B)(6)
E4206.6	Dry-niche luminaires	680.23(C)(1) and (2)
E4206.7	No-niche luminaires	680.23(D)
E4206.8	Through-wall lighting assembly	680.23(E)
E4206.9	Junction boxes and enclosures for transformers or ground-fault circuit-interrupters	680.24(A) through (E)
E4206.9.1	Junction boxes	680.24(A)(1) and (2)
E4206.9.2	Other enclosures	680.24(B)(1) and (2)
E4206.9.3	Protection of junction boxes and enclosures	680.24(C)
E4206.9.4	Grounding terminals	680.24(D)
E4206.9.5	Strain relief	680.24(E)
E4206.10	Underwater audio equipment	680.27(A)
E4206.10.1	Speakers	680.27(A)(1)
E4206.10.2	Wiring methods	680.27(A)(2)
E4206.10.3	Forming shell and metal screen	680.27(A)(3)
E4206.11	Electrically operated pool covers	680.27(B)(1) and (2)
E4206.12	Electric pool water heaters	680.9
E4206.13	Pool area heating	680.27(C)
E4206.13.1	Unit heaters	680.27(C)(1)
E4206.13.2	Permanently wired radiant heaters	680.27(C)(2)
E4206.13.3	Radiant heating cables prohibited	680.27(C)(3)
SECTION E4207	**STORABLE SWIMMING POOLS**	
E4207.1	Pumps	680.31
E4207.2	Ground-fault circuit-interrupters required	680.32
E4207.3	Luminaires	680.33
E4207.3.1	Within the low voltage contact limit	680.33(A)
E4207.3.2	Over the low voltage contact limit	680.33(B)
E4207.4	Receptacle locations	680.34
SECTION E4208	**SPAS AND HOT TUBS**	
E4208.1	Ground-fault circuit-interrupters	680.44(A) and (B)

E4208.2	Electric water heaters	680.9
E4208.3	Underwater audio equipment	680.43(G)
E4208.4	Emergency switch for spas and hot tubs	680.41
SECTION E4209	**HYDROMASSAGE BATHTUBS**	
E4209.1	Ground-fault circuit-interrupters	680.71
E4209.2	Other electric equipment	680.72
E4209.3	Accessibility	680.73
E4209.4	Bonding	680.74
CHAPTER 43	**CLASS 2 REMOTE-CONTROL, SIGNALING AND POWER-LIMITED CIRCUITS**	
SECTION E4301	**GENERAL**	
E4301.1	Scope	725.1
E4301.2	Definitions	Article 100 and 725.2
SECTION E4302	**POWER SOURCES**	
E4302.1	Power sources for Class 2 circuits	725.121(A)
E4302.2	Interconnection of power sources	725.121(B)
SECTION E4303	**WIRING METHODS**	
E4303.1	Wiring methods on supply side of Class 2 power source	725.127
E4303.2	Wiring methods and materials on load side of Class 2 power source	725.130, 725.154, Table 725.154(G), 725.179
Table E4303.2	Cable uses and permitted substitutions	725.154 and Table 725.154(G)
E4303.2.1	Type CL2P cables	725.154(A) and 725.179(A)
E4303.2.2	Type CL2 cables	725.179(C)
E4303.2.3	Type CL2X cables	725.154(E)(4) and 725.179(D)
E4303.2.4	Marking	725.179(L)
SECTION E4304	**INSTALLATION REQUIREMENTS**	
E4304.1	Separation from other conductors	725.136(A), (B), (C) and (D)
E4304.2	Other applications	725.136(I)
E4304.3	Class 2 circuits with communication circuits	725.139(D)
E4304.4	Class 2 cables with other circuit cables	725.139(E)(1) through (5)
E4304.5	Installation of conductors and cables	300.11(B)(2), 725.21, 725.24 and 725.143
E4304.6	Bushing	725.3(J)

HISTORY NOTE APPENDIX

California Residential Code
(Title 24, Part 2.5, California Code of Regulations)

For prior code history, see the History Note Appendix to the California Residential Code (CRC), 2010 Triennial Edition effective January 1, 2011.

1. HCD *03/12*, SFM *04/12* Adoption by reference of the *2012 International Residential Code* with necessary state amendments in the *2013 California Residential Code*. Effective date on January 1, *2014*, for provisions of HCD and SFM. DWR Provisions *were carried forward to the 2013 edition of the residential code.*

>

INDEX

A

ACCESS
To attic R807
To crawl space R408.4
ACCESSIBILITY R320
ACCESSORY STRUCTURE
Definition R202
ADDRESS (SITE) R319
ADMINISTRATION, CALIFORNIA CHAPTER 1, DIVISION I
General 1.1
Department of Housing and Community Development 1.8
Office of the State Fire Marshal 1.11
> **ADMINISTRATION, DIVISION II** ..... Chapter 1
Authority R104
Entry R104.6
Inspections R109
Permits R105
Purpose R101.3
Violations R113
ALLOWABLE SPANS
Of floor joists R502.3, R505.3.2
Of headers R602.7, R603.6, R613.10
Of rafters and ceiling joists R802.4, R802.5, R804.3.1, R804.3.2
ALTERNATE MATERIALS (see MATERIALS) 1.8.7, R104.11
ANCHOR BOLTS R403.1.6
APPEAL
Board of 1.8.8, R112.1
Right of 1.8.8, R112
APPLIANCE
Flue area R1003.14
APPLICATION
Plywood R703.3
APPROVED
Definition R202
AREA
Flue (appliances) R1003.14
Flue masonry R1003.15
ASPHALT SHINGLES R905.2
ATTIC
Access R807
AUTOMATIC FIRE SPRINKLER SYSTEMS R313

B

BASEMENT WALL
Definition R202
BATH AND SHOWER SPACES R307
BATHROOM
Exhaust fan R303.3.1
BEAM SUPPORTS R606.14
BEARING
Of joists R502.6
BORED HOLES (see NOTCHING)
BUILDING
Definition R202
Existing, definition R202
BUILDING OFFICIAL
Definition R202
Existing, definition R202
BUILDING PLANNING
Automatic fire sprinkler systems R313
Carbon monoxide alarms R315
Ceiling height R305
Decay protection R317
Design criteria R301
Emergency escape R310
Exterior wall R302.1
Fire-resistant construction R302
Foam plastic R316
Garages and carports R309
Glazing R308
Guardrails or guards R312
Handrails R311.7.8, R311.8.3
Insulation R302.10
Landing R311.3, R311.3.1, R311.3.2, R311.5.1
Light, ventilation and heating R303
Means of egress R311
Minimum room area R304
Planning ..... Chapter 3
Plumbing fixture clearances R307
Radon protection ..... Appendix F
Ramps R311.8
Sanitation R306
Site address R319
Smoke alarms R314
Stairways R311.7
Storm shelters R323
Termite protection R318
BUILT-UP GIRDERS (see GIRDERS)
BUILT-UP ROOFING (see ROOFING)

C

CARBON MONOXIDE ALARMS R315
CARPORT R309.2
CEILING
Finishes R805
Height R305
CHASES R606.7
CHIMNEYS
And fireplaces . . . . . Chapter 10
Caps R1003.9.1
Clearance R1003.18
Corbeling R1003.5
Crickets R1003.20
Design (masonry) R1003.1
Factory-built R1005
Fireblocking R1003.19
Flue area R1003.14, R1003.15
Flue lining R1003.11
Load R1003.8
Multiple flues R1003.13
Rain caps 1003.9.3
Spark arrestors R1003.9.2
Termination R1003.9
Wall thickness R1003.10
CLAY
Tiles R905.3
CLEANOUT
Masonry chimney R1003.17
CLEARANCE
For chimneys R1003.18
COLUMNS R407
COMBUSTIBLE MATERIAL
Definition R202
CONCRETE
Capillary break R506.2.3.1
Compressive strength R402.2
Floors (on ground) R506
Tile (roof) R905.3
Weathering . . . . . Figure R301.2(3), R402.2
CONSTRUCTION
Cavity wall masonry R608
Flood-resistant R322
Floors . . . . . Chapter 5
Footings R403
Foundation material R402
Foundation walls R404
Foundations . . . . . Chapter 4
Grouted masonry R609
Masonry R606, R607, R608, R609, R610
Reinforced hollow unit masonry R609.4
Roofs . . . . . Chapter 8
Steel framing R505, R603, R804
Waste R324.1
Wood framing R502, R602, R802
Walls . . . . . Chapter 6
COURT
Definition R202
COVERING
Exterior R703
Interior R702
Roof . . . . . Chapter 9
Wall . . . . . Chapter 7
CRAWL SPACE R408
CRITERIA
Design R301

D

DECAY
Protection against R317
DECK
Supported by exterior wall R507
Wood/plastic composite boards R507.3
DEFINITIONS
Building R202
DESIGN
Criteria R301
DOORS
Egress R311.2
Exterior R311.3.2, R612
DRAFTSTOPPING R302.12, R502.12
DRAINAGE
Foundation R405
Site drainage R300
DRILLING AND NOTCHING (see NOTCHING)
DWELLING
Definition R202
DWELLING UNIT
Definition R202
Separation R302.2, R302.3

E

EFFICIENCY DWELLING UNIT
Definition R202
Dimensions R304.5
EMERGENCY ESCAPE R202, R310
ENTRY 1.8.5, R104.6
EXTERIOR
Covering R703
Insulation and finish systems R703.9

Lath R703.6.1
Plaster R703.6
EXTERIOR WALL
Construction R302.1
Definition R202
Fire-resistance rating R302.1

F

FACTORY BUILT
Chimneys R1005
Fireplace stoves R1005.3
Fireplaces R1004
FASTENING . . . . . Table R602.3(1)
FENESTRATION
Definition R202
FINISHES
Flame spread and smoke density R302.9
For ceilings R805
Interior R302.9, R702
FIRE-RESISTANT CONSTRUCTION R302
FIRE SPRINKLER SYSTEM
Inspections of P2904.8
Sizing of P2904.6
Sprinkler location P2904.1.1
FIREBLOCKING
Barrier between stories R302.11, R602.8
Chimney R1003.19
Fireplace R1001.12
FIREPLACES . . . . . Chapter 10
Clearance R1001.11
Corbeling R1001.8.1
Factory-built R1004
Fireblocking R1001.12
Walls R1001.5
FLAME SPREAD INDEX R302.9, R302.10
FLASHING R703.7.5, R703.8, R903.2, R905
FLOORS
Concrete (on ground) R506
Steel framing R505
Treated-wood (on ground) R504
Wood framing R502
FLUE
Area R1003.14, R1003.15
Lining R1003.11, R1003.12
Multiple R1003.13
FOAM PLASTICS R316
FOOTINGS R403
FOUNDATIONS . . . . . Chapter 4
Cripple walls R602.9, R602.10.11, R602.11.2
Frost protection R403.1.4.1
Inspection R109.1.1
Walls R404
FRAME
Inspection R109.1.4

G

GARAGES R309
GIRDERS R502.5
GLAZING R308
Aggregate R303.1
Protection of openings R301.2.1.2
GRADE
Definition R202
Of lumber R502.1, R602.1, R802.1
Plane, definition R202
GROUND
Floors (on ground) R504, R506
GROUTED MASONRY (see MASONRY) R609
Reinforced R609.3
GUARDS OR GUARDRAIL R312
Definition R202
GYPSUM
Wallboard R702.3

H

HABITABLE SPACE
Definition R202
HALLWAYS R311.6
HANDRAILS R311.7.8, R311.8.3
Definition R202
HEADERS
SIP R613.10
Steel R603.6
Wood R602.7
HEARTH R1001.9
Extension R1001.9, R1001.10
HEATING R303.9
HEIGHT
Ceiling R305
HOLLOW-UNIT MASONRY (see MASONRY) R607.2.2.2, R608.1.1.2
Reinforced R609.4
HOT TUBS . . . . . Appendix G

I

INLET
To masonry chimneys R1003.16
INSPECTION
Card . . . . . AE 305.3

On site 1.8.4, R109.1
INSTALLATION
Existing . . . . . Appendix J
Of flue liners R1003.12
INSULATION R302.10
INTERIOR
Lath R702.2.3
Other finishes R702.5
Plaster R702.2
Wall covering . . . . . Chapter 7

J

JOIST
Bearing R502.6, R606.14.1

K

KITCHEN
Definition R202

L

LABELED
Definition R202
LABELING
Definition R202
LANDINGS R311.3, R311.3.1, R311.7.6, R311.8.2
LATERAL SUPPORT R502.7, R606.9, R610.5.2
LATH
Exterior R703.6.1
Interior R702.2.3
LAVATORIES . . . . .
Clearances R307
LIABILITY R104.8
LIGHT, VENTILATION AND HEATING R303
LIMITED-DENSITY OWNER-BUILT RURAL DWELLINGS
Alternative provisions R301.1.1.1
Definition R202
LINING
Flue R1003.11, R1003.12
LINTEL R606.10, R611.8, R703.7.3, R1001.7
LISTED AND LISTING
Definition applied to building provisions R202
LOAD
Additional R1003.8
Roof R301.6
Seismic risk map . . . . . Figure R301.2(2)
Snow load map . . . . . Figure R301.2(5)
Wind speed map . . . . . Figure R301.2(4)
LOADS
Dead load R301.4
Horizontal load AE602.1
Live load R301.5
LOADS, LIVE AND DEAD
Definition R202
LODGING HOUSE
Definition R202
LUMBER
Grade R502.1, R602.1, R802.1

M

MANUFACTURED HOME
Provisions . . . . . Appendix E
MASONRY
Anchorage R606.11
Cavity wall R608
Chases R606.7
General R606
Grouted R609
Hollow unit R202, R607.2.2.2, R608.1.1.2
Inspection R109.1.4
Reinforced grouted R609.3
Reinforced hollow unit R609.4
Seismic requirements R606.12
Solid, definition R202
Veneer R703.7
Veneer attachment R703.4
MATERIALS
Alternate 1.8.7, R104.11
Combustible R202, R1001.11, R1001.12, R1003.18, R1003.19
For flue liners R1003.11
For hearth extension R1001.9
For siding R703.3
MECHANICAL
Inspection R109.1.2
MEMBRANE
Penetration R302.4.2
Polyethylene R504.2.2, R506.2.3
Water-resistive R703.2
Waterproofing R406.2
METAL
Roof panels R905.10
Roof shingles R905.4
METHODS
Water distribution pipe sizing . . . . . Appendix P
MODIFICATIONS R104.10

MOISTURE CONTENT, BUILDING MATERIALS R109.1.4.1
MOISTURE CONTROL R702.7
MORTAR
Joints R607.2.1.1
MULTIPLE
Flues R1003.13

N

NONCOMBUSTIBLE MATERIAL
Definition R202
NOTCHING
Steel joists R505.2.5, R505.3.5, R804.2.5, R804.3.4
Steel studs R603.2.5, R603.3.4
Wood joists R502.8, R802.7.1
Wood studs R602.6
Wood top plates R602.6.1

O

OCCUPIED SPACE
Definition R202

P

PARAPETS R302.2.2, R302.2.3, R606.2.4
PARTICLEBOARD
Floor R503.3
Walls R605
PERMITS 1.8.4, R105
PIERS R606.6
Masonry R404.1.9
PLANNING
Building . . . . . Chapter 3
PLANS 1.8.4, R106
PLASTER
Exterior R703.6
Interior R702.2
PLUMBING
Fixture clearances R307
Inspection R109.1.2
PLYWOOD
Application R703.3
Materials, walls R604
PRECAST CONCRETE
Footings R403.4
Foundation material R402.3.1
Foundation walls R404.5
PRIVATE
Sewage disposal system . . . . . Appendix I
PROTECTION
Against decay and termites R317, R318
Against radon . . . . . Appendix F
PURLINS R802.5.1
PURPOSE 1.1.2, R101.3

R

RADON
Map . . . . . Appendix F
RAFTERS
Grade of lumber R802.1
Spans . . . . . R802.5, Tables R802.5.1(1) – R802.5.1(8)
RAMPS R311.8
RESISTANT SIDING MATERIAL (see MATERIALS)
RIDGE BOARD R802.3
RODENT PROOFING R602.3.4.1
ROOF
Coverings R905
Drainage R903.4
Flashing R703.8, R903.2, R905
Steel framing R804
Wood framing R802
ROOF-CEILING CONSTRUCTION (see CONSTRUCTION) . . . . . Chapter 8
Wind uplift R802.11, R804.3.9
ROOFING
Built-up R905.9
Liquid-applied coating R905.15
Modified bitumen R905.11
Sprayed polyurethane foam R905.14
Thermoplastic single-ply R905.13
Thermoset single-ply R905.12
ROOM
Minimum Sizes R304

S

SANITATION R306
SEISMIC RISK MAP . . . . . Figure R301.2(2)
SHAKES
Wood R702.6, R703.5, R905.8
SHINGLE
Asphalt shingles R905.2
Metal R905.4
Slate R905.6
Wood R702.6, R703.5, R905.7
SHOWER
Compartment R307.2
SIDING
Exterior coverings R703

SITE
Address R319
Preparation R408.5, R504.2, R506.2
SIZE
Of rooms R304
SKYLIGHTS R308.6
SLATE SHINGLES R905.6
SMOKE ALARMS R314
SMOKE-DEVELOPED INDEX R302.9, R302.10
SNOW LOAD MAP . . . . . R301.2(5)
SOIL INVESTIGATIONS R401
SPANS
Steel (allowable) R505.3.2, R804.3.2.1
Wood (allowable) R502.3, R802.5
STACK BOND R606.8
STAIRWAYS R311.7
STANDARDS . . . . . Chapter 44, Appendix G
STEEL
Fireplace units R1001.5.1
Floor construction R505
Roof-ceiling construction R804
Walls R603
STORM SHELTERS R323
STORY
Definition R202
STRUCTURAL INSULATED PANEL (SIP) R613
STUDS
Wood R602.2, R602.3
Spacing R602.3.1
Steel R603.2, R603.3
SUPPORT
Of decks R507.1
Of floor joists R502.6, R505.3.2
Of masonry chimneys R1003.2, R1003.3, R1003.4
SWIMMING POOLS . . . . . Appendix G

T

TEMPERATURE ISOLINES . . . . . Figure R301.2(1)
TERMINATION
Of chimneys R1003.9
TERMITES
Infestation probability map . . . . . Figure R301.2(6)
Protection R318
THICKNESS
Of chimney walls R1003.10
TIES
Veneer R703.7.4
TILE
Shingles (clay and concrete) R905.3
TOWNHOUSE
Definition R202
Scope 1.1.3, R101.2
Separation R302.2
TRUSSES
Steel R505.1.3, R804.3.7
Wood R502.11, R802.10

U

UNDER FLOOR
Space R408
UNVENTED ATTIC ASSEMBLIES R806.5

V

VAPOR RETARDERS R506.2.3, R702.7
Capillary break R506.2.3.1
Definition R202
VENEER
Masonry R703.7
VENTILATION
Bathroom R303.3
Roof R806
Under floor R408.1
VIOLATIONS
And penalties R113
VOLATILE ORGANIC COMPOUNDS (rocs)
Pollutant control R330

W

WALLBOARD
Gypsum R702.3
WALLS
Bracing, steel R603.9
Bracing, wood R602.10
Construction . . . . . Chapter 6
Covering . . . . . Chapter 7
Cripple R602.9
Deflection R301.7
Exterior covering R703
Finishes R302.9, R702
Fireplace R1001.5
Foundation R404
Insulating concrete form R611.3, R611.4, R611.5.3
Steel framing R603
Structural insulated panels (SIP) R613
Thickness, masonry chimneys R1003.10
Wood framing R602

WASTE
Construction waste R324.1
WATER CLOSET, ANCORAGE
. . . . . R306.1
WATER HEATER, ANCORAGE R301.2.2.3.7
WATERPROOFING
And dampproofing R406
WIND SPEED MAP . . . . . Figure R301.2(4)
WINDOW R612
Fall prevention R312.2
Opening limiting devices R312.2.2
WOOD
Floor construction R502
Foundation walls R404.2
Roof-ceiling construction R802
Shakes R905.8
Shingles R905.7
Trusses R502.11, R802.10
Walls R602

Y

YARD
Definition R202

INTERNATIONAL CODE COUNCIL®

People Helping People Build a Safer World®

New Tools for Your Residential Code

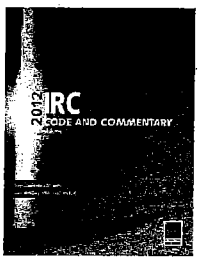

CODE AND COMMENTARY IN ONE!
2012 IRC® CODE AND COMMENTARY (2-VOLUME SET)

This insightful reference contains the complete text of the IRC plus expert commentary printed after each code section. The Code and Commentary is an ideal go-to reference for effective design, construction and inspection.

Features:

- ✓ All text, tables and figures from the code
- ✓ Expert technical commentary printed after each code section
- ✓ Suggestions for effective application
- ✓ Historical and technical background
- ✓ General Comments and Purpose statements for each chapter.

SOFT COVER #3110S12
PDF CD-ROM #3110CD12
PDF DOWNLOAD #871P12
Volumes are also sold separately.

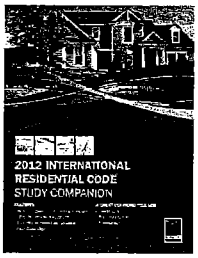

INCLUDES BONUS ONLINE QUIZ!
THE 2012 INTERNATIONAL RESIDENTIAL CODE® STUDY COMPANION

A comprehensive self-study guide for addressing building, mechanical, plumbing, fuel gas and electrical provisions. Particular emphasis is placed on the building planning requirements of Chapter 3 and the floor, wall, ceiling, and roof framing provisions. The Companion's 18 study sessions provide practical learning assignments and contain specific learning objectives, applicable code text and commentary, and a list of questions summarizing key points for study. A 35-question quiz is provided at the end of each study session enabling users to test their knowledge of the material. An answer key indicates the correct response and code reference for each of the 630 questions. (500 pages)

SOFT COVER #4117S12
PDF DOWNLOAD #8950P078



GET TEST-READY!
2012 IRC FLASHCARDS

This helpful study aid provides an effective, time tested method for study and information retention. FlashCards can be used anytime, anywhere and are prepared by code experts to ensure accuracy and quality. (220 cards)

#1121S12



FREE PREVIEW VIDEO ONLINE!
SIGNIFICANT CHANGES TO THE INTERNATIONAL RESIDENTIAL CODE, 2012 EDITION

This must-have guide provides comprehensive, yet practical, analysis of the critical changes made between the 2009 and 2012 editions of the IRC. Key changes are identified then followed by in-depth discussion of how the change affects real-world application. Coverage reflects provisions with special significance, including new and innovative design ideas and technologies, modern materials and methods of construction, and current approaches to safety and stability. (250 pages)

#7101S12

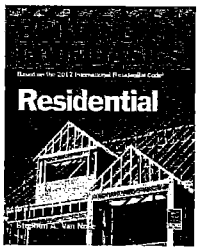

BUILDING CODE BASICS: RESIDENTIAL, BASED ON THE 2012 IRC

Chapters progress in the order of construction, from site work and foundations through to fire- and life-safety and environmental requirements of a finished residence. Also includes requirements for plumbing, mechanical, fuel gas, electrical systems, and equipment. **Author and ICC code expert Stephen Van Note** uses simplified, non-code language and logical topic organization to make complex code concepts more understandable, while descriptive illustrations and tables explain code fundamentals. Practical, on-the-job scenarios provide a real-world context and help readers learn how to apply the code. (288 pages)

#4181S12

ORDER YOUR CODE TOOLS TODAY! 1-800-786-4452 | WWW.ICCSAFE.ORG/BOOKS

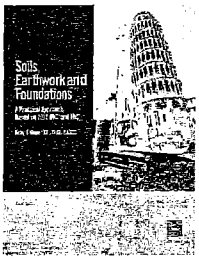

NEW EDITION!
SOILS, EARTHWORK, AND FOUNDATIONS: A PRACTICAL APPROACH, BASED ON 2012 IRC AND IBC

Author Kirby T. Meyer, P.E., D.GE, F.ASCE bridges the worlds of geotechnical engineering and foundation design, with construction activities and inspections dealing with soil conditions and building foundations. The book provides illustrations to assist in the understanding of the principles involved in foundations, guidelines for when to call on a geotechnical or foundation design engineer, and tips for effectively communicating with geotechnical and structural professionals. Discussion of construction and inspection of roadways and parking lots has been added along with an extensive treatment of the 2012 IBC Special Inspector program. Review questions are included that will assist those studying for the Soils Special Inspection Certification Exam. References to the 2012 IRC and IBC are provided throughout. (300 pages)

SOFT COVER #4036S12
PDF DOWNLOAD #8950P275

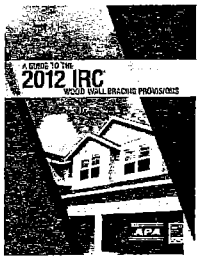

NEW EDITION FROM APA & ICC!
A GUIDE TO THE 2012 IRC WOOD WALL BRACING PROVISIONS

Wall bracing is a common source of confusion and misapplication although it is of critical importance when designing, performing plan review, building or inspecting a structure. This full-color illustrative guide was developed to help building designers, builders, building officials and others using the code in the application of the lateral bracing requirements of the 2012 IRC. The authors identify and explain the key elements of wall bracing and demystify the IRC prescriptive bracing provisions. Topics covered include:

- The IRC's new simplified wall bracing provisions
- The evolution and "language" of wall bracing
- Wind and seismic forces and how they act on structures
- Bracing methods and options available to the builder/designer
- The physical limits of wall bracing
- Determining how much bracing is required with adjustments and variations
- Connection details
- Narrow wall solutions

(276 pages)

SOFT COVER #7102S12
PDF DOWNLOAD #8799P12

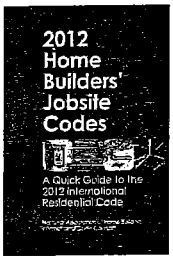

FROM NAHB AND ICC!
100+ ILLUSTRATIONS!
2012 HOME BUILDERS' JOBSITE CODES: A QUICK GUIDE TO THE 2012 IRC

This user-friendly guide is packed with illustrations, tables, figures and a glossary to facilitate your understanding of the 2012 IRC. It is an ideal field guide for builders, trade contractors, design professionals, inspectors, and others involved in the design and construction of residential buildings. This easy-to-transport resource discusses the impact of 2012 code changes in energy efficiency, and details new fire safety and hurricane protection measures. (345 pages)

#7103S12

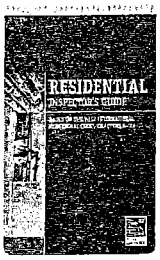

RESIDENTIAL INSPECTOR'S GUIDE: BASED ON THE 2012 INTERNATIONAL RESIDENTIAL CODE® CHAPTERS 1–33

Your ideal resource for effective, accurate, consistent, and complete residential inspections. This handy pocket guide is designed for residential inspectors conducting building, energy, plumbing, mechanical and fuel gas inspections, and is organized in a manner consistent with the inspection sequence and process for easy use on site.

- Quickly identify the relevant IRC section for each topic listed.
- Develop an efficient and effective approach to the inspection process.
- Verify that construction work complies with the code.
- Increase consistency and accuracy of inspections.
- Build procedural and technical consistency within the department of building safety. (300 pages)

SOFT COVER #7100S12
PDF DOWNLOAD #8950P086



HIGH-DIMENSION COLOR FIGURES!
DEWALT® RESIDENTIAL CONSTRUCTION CODES, COMPLETE HANDBOOK (2012 IRC)

Well-known **author Lynn Underwood** covers the most commonly used code requirements in the 2012 IRC and presents them to users in a format that is easy to navigate and easy to understand. The handbook's wide range of residential construction topics include: building, plumbing, mechanical, and electrical installations. Clear, straightforward terminology and valuable code reference citations are included throughout the book, enabling users to understand and discuss code requirements in the field. (337 pages)

#9102S1

ORDER YOUR CODE TOOLS TODAY! 1-800-786-4452 | WWW.ICCSAFE.ORG/BOOKS

13-07658